TRACY

Tracy Hills Specific Plan

Approved April 5, 2016

Tracy City Council Resolution 2016-063

TRACY HILLS

Specific Plan

Tracy Hills Specific Plan
Approved - April 5, 2016
Tracy City Council Resolution 2016-063

City of Tracy
333 Civic Center Plaza
Tracy, California, 95376

Tracy Hills Specific Plan

Developer and Applicant:

INTEGRAL Communities
John Stanek, Principal
888 San Clemente, Suite 100
Newport Beach, CA 92660

Land Planning and Entitlement

John Palmer, AICP
672 W. 11th Street
Tracy, CA 95376

Mike Souza
Souza Realty & Development
105 E. 10th Street
Tracy, CA 95367

Consultants:

Land Planning and Landscape Architecture

FORMA Design, Inc.
3050 Pullman Street
Costa Mesa, CA 92626
Tel: (714) 673-6200

Project Engineers

Ruggeri-Jensen-Azar
2541 Warren Drive, Suite 100
Rocklin, CA 95677
Tel: (916) 630-8900

Architecture

KTGY Group, Inc.
580 Second Street, Suite 200
Oakland, CA 94607
Tel: (510) 463-2038

TABLE OF CONTENTS

1 INTRODUCTION 1-1

1.1 PURPOSE AND SCOPE OF THE TRACY HILLS SPECIFIC PLAN 1-1

1.2 PROJECT OVERVIEW 1-1

1.3 EXISTING CONDITIONS 1-10

1.3.1 Conservation Easement(s) and Protected Open Space 1-10

1.3.2 Interstate 580 and Pipeline Easements 1-10

1.3.3 California Aqueduct and the Delta-Mendota Canal 1-10

1.3.4 Union Pacific Railroad Line 1-10

1.4 PROJECT GOALS 1-13

1.5 HOW TO USE THIS DOCUMENT 1-14

2 ZONING AND DEVELOPMENT STANDARDS 2-1

2.1 RESIDENTIAL ZONING DISTRICTS 2-8

2.1.1 Purpose 2-8

2.1.2 Permitted and Conditionally Permitted Uses Within Residential Zoning Districts 2-8

2.1.3 Development Standards for RE-TH, LDR-TH, MDR-TH, and HDR-TH 2-9

2.2 GENERAL HIGHWAY COMMERCIAL ZONING DISTRICT 2-10

2.2.1 Purpose 2-10

2.2.2 Permitted and Conditionally Permitted Uses Within GHC-TH 2-10

2.2.3 Development Standards for GHC-TH 2-10

2.3 MIXED USE BUSINESS PARK ZONING DISTRICT 2-11

2.3.1 Purpose 2-11

2.3.2 Permitted and Conditionally Permitted Uses Within MUBP-TH 2-11

2.3.3 Development Standards for MUBP-TH 2-11

2.4 LIGHT INDUSTRIAL ZONING DISTRICT 2-13

2.4.1 Purpose 2-13

2.4.2 Permitted and Conditionally Permitted Uses Within M1-TH 2-13

2.4.3 Development Standards for M1-TH 2-13

2.5 TRACY HILLS CONSERVATION ZONING DISTRICT 2-14

2.5.1 Purpose 2-14

2.5.2 Permitted and Conditionally Permitted Uses Within C-TH 2-14

2.5.3 Development Standards for C-TH 2-14

2.6 OTHER LAND USES 2-19

2.6.1 Parks/Recreation 2-19

2.6.2 School Sites 2-19

2.6.3 Public Infrastructure 2-20

2.7 OTHER STANDARDS 2-20

2.7.1 Noise 2-20

2.8 AIRPORT LAND USE COMPATIBILITY 2-20

TABLE OF CONTENTS

3 DESIGN GUIDELINES 3-1

3.1 INTRODUCTION 3-1

3.1.1 Purpose and Objectives 3-1

3.2 RESIDENTIAL DESIGN GUIDELINES 3-2

3.2.1 Scale 3-3
3.2.2 Architectural Streetscape 3-5
3.2.3 Variation 3-8
3.2.4 Architectural Character and Styles 3-9
3.2.5 Residential Design Guidelines Checklist 3-17

3.3 MIXED USE BUSINESS PARK ZONING DISTRICT DESIGN GUIDELINES 3-19

3.3.1 Site Design 3-20
3.3.2 Scale 3-22
3.3.3 Architectural Streetscape 3-23
3.3.4 Mixed Use Business Park Zoning District Design Guidelines Checklist 3-26

3.4 LANDSCAPE DESIGN GUIDELINES 3-27

3.4.1 Introduction 3-27
3.4.2 Community Theming and Character 3-28
3.4.3 Landscape Guiding Principles 3-30
3.4.4 Community Monumentation Identity Plan 3-32
3.4.5 Community Monumentation 3-34
3.4.6 Streetscape and Trails 3-43
3.4.7 Edge Conditions / Easements 3-51
3.4.8 Conceptual Overall Illustrative Parks and Landscape Plan 3-60
3.4.9 Lighting 3-70
3.4.10 Furniture 3-75
3.4.11 Walls and Fences 3-75
3.4.12 Landscape Master Tree Plan 3-82
3.4.13 Landscape Irrigation 3-84
3.4.14 Utility and Equipment Screening 3-84
3.4.15 Landscape Plant Matrix 3-85
3.4.16 Landscape Design Guidelines Checklist 3-94

4 INFRASTRUCTURE AND SERVICES 4-1
4.1 GENERAL DESCRIPTION 4-1
4.2 ROADWAY SYSTEM 4-1
4.2.1 Roadway System Concept 4-1
4.2.2 Existing Streets 4-1
4.2.3 Planned Streets – Specific Plan Circulation 4-2
4.2.4 Pedestrian and Bicycle Circulation 4-17
4.2.5 Public Transportation 4-17
4.2.6 Roadway Phasing 4-17
4.2.7 Vehicle Trip Reduction and Travel Demand Management 4-17
4.3 WATER SUPPLY SYSTEM 4-19
4.3.1 Water Demand 4-19
4.3.2 Sources of Supply 4-19
4.3.3 Distribution and Storage 4-19
4.3.4 Level of Service and Timing Standard 4-20
4.3.5 Water Supply System Phasing 4-20
4.3.6 Trench Requirements 4-20
4.4 RECYCLED WATER SYSTEM 4-20
4.4.1 Recycled Water 4-20
4.5 WASTEWATER COLLECTION AND TREATMENT 4-25
4.5.1 Wastewater Collection System and Treatment 4-25
4.5.2 Wastewater Treatment 4-25
4.5.3 Trench Requirements 4-25
4.6 STORM DRAINAGE SYSTEM 4-29
4.6.1 Existing Conditions 4-29
4.6.2 Collection System 4-29
4.6.3 Storm Drainage System Phasing 4-30
4.6.4 Quality of Storm Water Discharge 4-30
4.7 PUBLIC FACILITIES AND SERVICES 4-33
4.7.1 Electricity 4-33
4.7.2 Natural Gas 4-33
4.7.3 Telephone 4-33
4.7.4 Cable Television 4-33
4.7.5 Solid Waste 4-33
4.7.6 Schools 4-33
4.8 PROJECT PHASING 4-34
4.8.1 Phase 1A 4-34
4.8.2 Phase 1B 4-34
4.8.3 Future Phases 4-34

4.9 INFRASTRUCTURE FUNDING 4-37
4.9.1 Funding Sources 4-37
4.9.2 Finance and Implementation Plan 4-38
4.10 MAINTENANCE 4-38
4.10.1 Maintenance Responsibilities 4-38
4.11 ENGINEERING DESIGN GUIDELINES 4-43

5 ADMINISTRATION 5-1
5.1 THE PERMIT PROCESS 5-1
5.1.1 Tracy Hills Design Guidelines 5-1
5.1.2 Development Review 5-1
5.1.3 Conditional Use Permits 5-1
5.1.4 Tentative Maps 5-1
5.1.5 180- to 185-Acre Open Space Area 5-2
5.1.6 Development Phases other than Phase 1A 5-2

LIST OF FIGURES

1 INTRODUCTION

Figure 1-1 Regional Context Map 1-3
Figure 1-2 Vicinity Map 1-5
Figure 1-3 Land Use Concept 1-7
Figure 1-4 Existing Conditions 1-11

2 ZONING AND DEVELOPMENT STANDARDS

Figure 2-1 Zoning Districts 2-3
Figure 2-2 100'-Wide Conservation Easements 2-15
Figure 2-3 Conservation Easement Typical Cross Sections 2-17
Figure 2-4 Public Facilities Plan 2-21
Figure 2-5 Tracy Municipal Airport Land Use Compatibility Zones 2-23

3 DESIGN GUIDELINES

Figure 3-1 Community Identity Signage/Monumentation Key Map - Phase 1A 3-32
Figure 3-2a Primary Community Monumentation 3-38
Figure 3-2b Secondary Community Monumentation 3-39
Figure 3-3 Primary Neighborhood Monumentation 3-40
Figure 3-4 Park Monumentation 3-41
Figure 3-5 Trailhead Marker 3-42
Figure 3-6 Streetscape and Trails Key Map – Phase 1A 3-44
Figure 3-7 Section 1 Four Lane Major Arterial with Median (99' RW) 3-45
Figure 3-8 Section 2 Spine Road (86' RW) 3-46
Figure 3-9 Section 2b Spine Road and 16.5' – Pipeline Easement 3-47
Figure 3-10 Section 3 Pipeline Easement with Residential on Both Sides 3-48
Figure 3-11 Section 4 Residential Street (57' RW) 3-49
Figure 3-12 Section 4b Residential Street Adjacent to Park 3-50
Figure 3-13 Edge Conditions/Easements Key Map 3-51
Figure 3-14 Section A 3-52
Figure 3-15 Section B 3-53
Figure 3-16 Section C 3-55
Figure 3-17 Sample of Planting Scheme 3-56
Figure 3-18 Section D 3-57
Figure 3-19 Section E 3-58
Figure 3-20 Section F 3-59
Figure 3-21 Activity Nodes and Trailheads 3-60
Figure 3-22 Conceptual Overall Illustrative Parks and Landscape Plan – Phase 1A 3-61
Figure 3-23 Public Park 1 3-62
Figure 3-24 Public Park 2 3-63
Figure 3-25 Public Park 3 3-64
Figure 3-26 Public Park Angled Parking Street Section and Plan View 3-65
Figure 3-27 Village Green 3-66
Figure 3-28 HOA Parks 3-67

Figure 3-29 Master Wall and Fence Plan – Phase 1A ..... 3-76 & 3-77
Figure 3-30 4'-0" Black Vinyl-Coated Chain Link Fence 3-79
Figure 3-31 5'-0" Easement Fence 3-79
Figure 3-32 8'-0" Simtek Fence 3-80
Figure 3-33 3'-6" Concrete Split Rail Fence 3-80
Figure 3-34 7'-0" Proto II Block Wall 3-81
Figure 3-35 6'-0" Builder Block Wall or 8'-0" Sound Wall 3-81
Figure 3-36 Master Tree Plan – Phase 1A ..... 3-82 & 3-83

4 INFRASTRUCTURE AND SERVICES

Figure 4-1 Roadway Plan 4-3
Figure 4-2 Four Lane Parkway 4-5
Figure 4-3 Two Lane Collector 4-7
Figure 4-4 Two Lane Major Collector 4-9
Figure 4-5 Spine Road / Lammers Extension 4-11
Figure 4-6 Four Lane Major Arterial with Median 4-13
Figure 4-7 Residential Streets 4-15
Figure 4-8 Water Distribution System 4-21
Figure 4-9 Recycled Water Distribution System 4-23
Figure 4-10 Wastewater Collection System 4-27
Figure 4-11 Storm Drainage System 4-31
Figure 4-12 Phasing Plan 4-35
Figure 4-13 Maintenance Responsibility (Phase 1A) 4-41
Figure 4-14 Standard Rip Rap Energy Dissipator 4-44
Figure 4-15 Type "G" Inlet 4-45
Figure 4-16 Type "J" Inlet 4-46
Figure 4-17 Type I Manhole 4-47
Figure 4-18 Type II Manhole Base 4-48
Figure 4-19 Type III Manhole Base 4-49
Figure 4-20 Type IV Manhole Base for CIP 4-50
Figure 4-21 Type V Manhole Base 4-51
Figure 4-22 Inlet/MH General Notes & Details 4-52
Figure 4-23 Type "M" Headwall 4-53
Figure 4-24 Pipe Culvert Headwalls Straight and "L" 4-54
Figure 4-25 Pipe Culvert Headwalls Endwalls and Wingwalls Types A, B and C 4-55
Figure 4-26 Inlet Trash Rack 33" Pipe or Larger 4-56

5 ADMINISTRATION

Figure 5-1 Specific Plan Permit Processing 5-3

LIST OF TABLES

1 INTRODUCTION

Table 1-1 Land Use Plan Buildout Example 1-9

2 ZONING AND DEVELOPMENT STANDARDS

Table 2-1 Permitted and Conditionally Permitted Uses 2-5
Table 2-2 Residential Zoning Districts 2-8
Table 2-3 Development Standards – Residential Zoning Districts 2-9
Table 2-4 Development Standards – General Highway Commercial Zoning District 2-10
Table 2-5 Development Standards – Mixed Use Business Park Zoning District 2-12
Table 2-6 Development Standards – Light Industrial Zoning District 2-13

3 DESIGN GUIDELINES

(No Table References)

4 INFRASTRUCTURE AND SERVICES

(No Table References)

5 ADMINISTRATION

(No Table References)

1 INTRODUCTION

1.1 PURPOSE AND SCOPE OF THE TRACY HILLS SPECIFIC PLAN

The Tracy Hills Specific Plan is the detailed plan and regulatory document for the development of the entire Specific Plan area. This Specific Plan document is intended to implement the General Plan and direct all facets of the development of the property including, but not necessarily limited to, the distribution of land uses, the location and sizing of the existing and proposed supporting infrastructure, and an overview of the financial vehicles that are intended to be used to plan, construct, and operate these facilities. This Specific Plan is a regulatory document, is incorporated into the City's Zoning Ordinance, and serves as the zoning for all properties within the Specific Plan area.

The Tracy Hills Specific Plan was originally adopted in 1998 (the 1998 THSP). Since then, City policies and developer plans have changed. Due to these changes, the developer submitted and the City approved this new THSP to replace the former 1998 THSP.

1.2 PROJECT OVERVIEW

The Tracy Hills Specific Plan area encompasses approximately 2,731.6 acres within the southern portion of the City of Tracy surrounding the existing interchange at Corral Hollow Road and the proposed Lammers Road interchange on Interstate 580 (I-580). (Refer to **Figure 1-1, Regional Context Map;** and **Figure 1-2, Vicinity Map.)**

The Specific Plan consists of three areas defined by the physical characteristics of the site. (Refer to **Figure 1-3, Land Use Concept.)**

1. The northern portion of the Specific Plan between the Delta-Mendota Canal and the California Aqueduct is zoned for medium density residential and light industrial uses.
2. The central portion of the Specific Plan, south of the California Aqueduct and north of I-580, is planned predominately for single-family homes, open space conservation easements, mixed use business park, and commercial retail areas. These uses will provide employment opportunities and daily needs and services for residents. Multi-use trails will connect residential neighborhoods, integrated with public park amenities that are within walking distance. Additionally, an elementary school site is planned to serve the neighborhood residents of this area.
3. The southern portion of the Specific Plan area, with rolling and steeper slopes on the southern side of I-580, will be primarily residential neighborhoods with parks and school sites. Consistent with the General Plan, 180 to 185 acres of open space, (originally shown as a golf course in the 1998 THSP), will be integrated into the low density residential areas. A mixed use business park area will be located southwest of the planned Lammers interchange and a commercial retail area will be located along the southeasterly project boundary at Corral Hollow Road. This area abuts approximately 3,500 acres of open space under a conservation easement.

Table 1-1, Land Use Plan Buildout Example summarizes the various proposed land uses, and provides the approximate developable acreages, development ranges, and the projected buildout of residential dwelling units and non-residential development square footage. The approximate gross acres for the Zoning designations for the Tracy Hills Specific Plan are also summarized.

Page Intentionally Blank

Figure 1-1

Regional Context Map

TRACY HILLS

Specific Plan

Page Intentionally Blank

Figure 1-2
Vicinity Map

Page Intentionally Blank

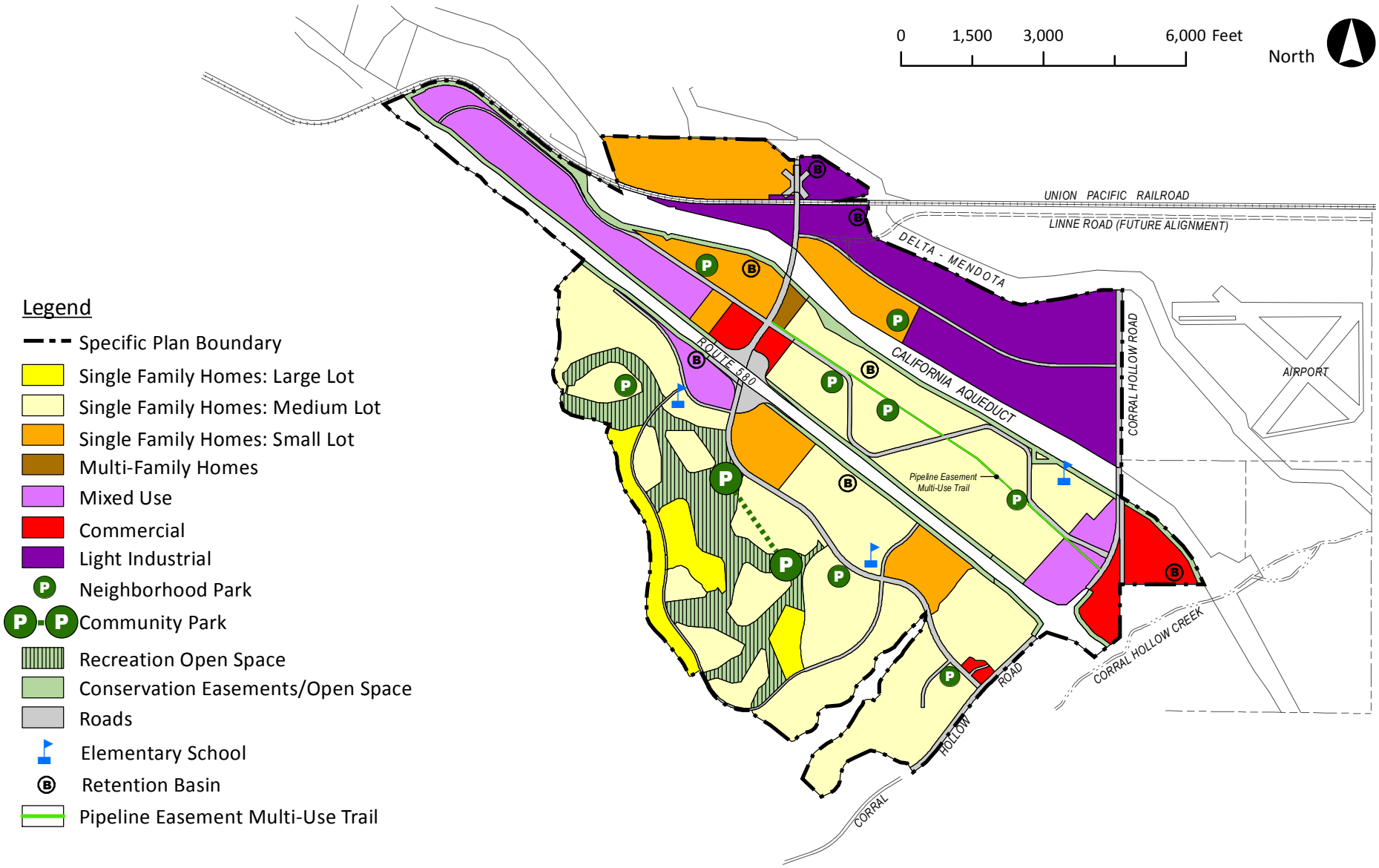

NOTES:
1. The locations, numbers, and configurations of public schools, park sites, and public utilities are conceptual and subject to change.
2. This exhibit is for conceptual purposes to show approximate locations.

Figure 1-3
Land Use Concept

TRACY HILLS
Specific Plan

Page Intentionally Blank

TABLE 1-1
LAND USE PLAN BUILDOUT EXAMPLE

Zoning District or Land Use	Approximate Gross Acres[1]	Approximate Adjusted Developable Acres[1, 2, 3]	Target Density Range or F.A.R.	Projected Dwelling Units or Square Feet[1]
Residential Estate	95.6	81.3	(0.5-2.0 DU's/ac.)	122 DU's
Low Density Residential	1,216.0	876.3	(2.1-5.8 DU's/ac.)	3,238 DU's
Medium Density Residential	318.1	270.4	(5.9-12.0 DU's/ac.)	2,014 DU's
High Density Residential	9.2	7.8	(12.1-25.0 DU's/ac.)	125 DU's
Mixed Use Business Park	211.1	179.4	0.20 F.A.R.	1,562,933 s.f.
General Highway Commercial	102.4	87.0	0.20 F.A.R.	758,944 s.f.
Light Industrial	363.1	308.6	0.25 F.A.R.	3,360,654 s.f.
Conservation Easements	123.3		n/a	
Subtotal:	**2,438.8**	**1,810.8**		
Interstate 580 Interchange and ROW	137.5			
California Aqueduct ROW	143.1			
Union Pacific Rail Road	12.2			
TOTAL:	**2,731.6**	**1,810.8**		5,499 DU's 5.7 mil s.f.

1 All Acreages, dwelling units, and square footage examples shown herein are approximate.

2 Adjusted Developable Acres - Residential, Mixed Use Business Park, General Highway Commercial, and Light Industrial acreages have been adjusted to show that an estimated 15% of the land area is used for infrastructure such as roads and utilities, and/or public facilities such as neighborhood parks/amenities, schools, and/or public facilities such as retention basins as noted in the General Plan. Actual numbers will vary depending on site specific characteristics.

3 180 to 185 acres of General Plan mandated Open Space taken out of Low Density Residential land use category.

1.3 EXISTING CONDITIONS

The Specific Plan area has ground elevations that begin at approximately 195 feet above sea level on the north east side of the site, and rise to over 1,200 feet in the south west corner. The area southwest of the California Aqueduct is primarily used for grazing. Other uses include row crop agriculture and orchards, with open space on the steep upland portions. Vegetation that occurs on site is primarily grassland dominated by non-native species and contains little undisturbed habitat in the flatter lowland areas. The riparian woodland along Corral Hollow Creek has been degraded by historical grazing. Scrub grows in areas of rock outcrops and shallow soil. The area between I-580 and the Union Pacific Railroad/California Aqueduct is vacant with an abandoned structure formerly used in relation with the livestock operation. The portion of the site bound by the California Aqueduct, Union Pacific Rail Road, Delta-Mendota Canal and Corral Hollow Road is utilized as agriculture with three existing residences. (Refer to **Figure 1-4, Existing Conditions Map.)**

1.3.1 Conservation Easement(s) and Protected Open Space

The Specific Plan contains approximately 120 acres of open space in 100-foot wide conservation easements that are located adjacent to I-580 and the southern side of the California Aqueduct. These open space conservation easement areas were granted to the San Joaquin Council of Governments (SJCOG).

Adjacent to the Specific Plan's western boundary and outside of the City limits, over 3,500 acres of open space has been set aside for the conservation of wildlife habitat. A conservation easement was recorded on the open space in July 2012 and granted to SJCOG. The conservation easement ensures that the lands will be preserved for habitat in perpetuity.

1.3.2 Interstate 580 and Pipeline Easements

Interstate 580 is a four-lane, limited-access interstate highway that bisects the property on a northwest to southeast axis. Interstate 580 connects to I-205 and the western extension of I-580 to the north and to I-5 to the south. The freeway is also fronted by the 100-foot wide, open space conservation easements.

Paralleling and adjacent to the freeway right-of-way are two easements that contain pipelines. A third pipeline easement transects the northeastern corner of the Specific Plan. Refer to Figure 1-4, Existing Conditions Map, for the general locations of pipeline easements.

1.3.3 California Aqueduct and the Delta-Mendota Canal

The California Aqueduct bisects the Specific Plan area north of I-580 in a general northwest-to-southeast direction. Located outside the northern Specific Plan boundary, the Delta-Mendota Canal (DMC), also runs in a northwest to southeast direction and abuts the northern Specific Plan boundary. This segment of the DMC is also located outside of City limits. The two aqueducts carry water south for agricultural use and further south into the Los Angeles basin.

1.3.4 Union Pacific Railroad Line

A segment of the Union Pacific Railroad line crosses the northwest corner of the Specific Plan area in an east-west direction and is an active railway.

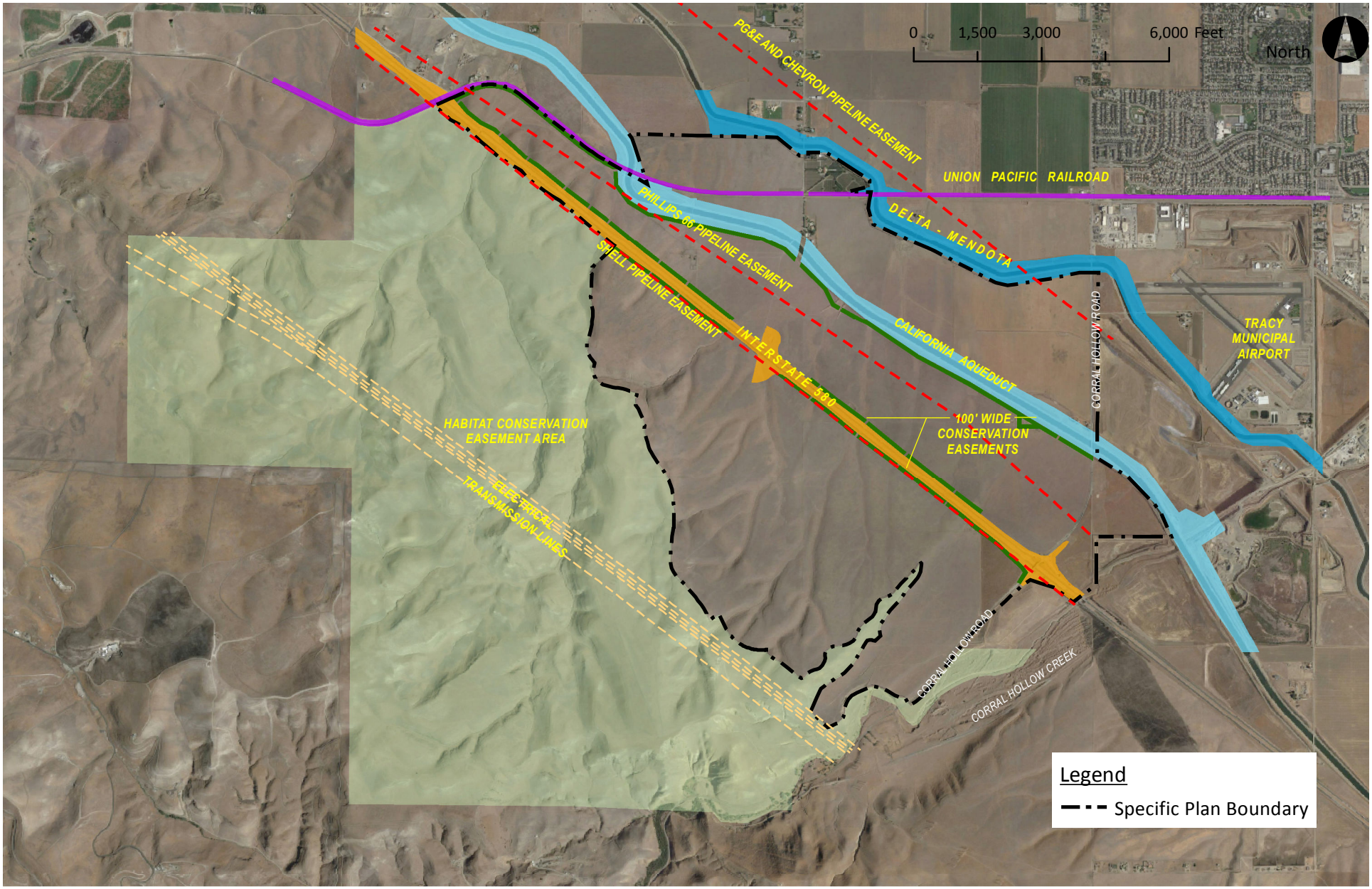

Figure 1-4

Existing Conditions

TRACY HILLS

Specific Plan

Page Intentionally Blank

1.4 PROJECT GOALS

The goals of the Tracy Hills Specific Plan are to:

1. Implement the City's General Plan Area of Special Consideration Number 8: Tracy Hills Specific Plan Area.
2. Create a master planned community that has a unique character and quality with a commitment to exemplary living, working, and recreational environments.
3. Protect and enhance environmental features and wildlife habitats within and near the Specific Plan Area through the preservation of large tracts of contiguous open space lands.
4. Facilitate development of infrastructure needed to serve the project through efficient and phased infrastructure design.
5. Provide a range of housing opportunities to support a diverse population, lifestyles and family groups.
6. Develop residential neighborhoods that respect natural landforms and scenic valley views with a commitment to quality site design, architecture, and landscape design.
7. Provide public parks, open space, and an integrated trails network with pedestrian and bicycle amenities, to create passive and active recreational opportunities to serve its residents.
8. Provide a comprehensive circulation network with integrated mobility options including pedestrian and bicycle amenities, with enhanced connectivity and safety, as alternatives to automobile use.
9. Provide mixed use business park land uses for commercial retail, office, institutional and other services that meet local, community, and regional needs.
10. Create opportunities for quality employment-generating uses and economic development opportunities that meet local, community and regional needs.
11. Establish a planning/zoning concept that is responsive to the market.
12. Enhance the character and quality of I-580 freeway corridor and edge.
13. Implement the Circulation Element of the City's General Plan which envisions transportation infrastructure improvements such as the Lammers/580 interchange.
14. Implement the City's General Plan which envisions that the geographical area governed by the Tracy Hills Specific Plan will be developed into a mixed use master planned community consisting of a variety of interconnected uses.
15. Implement a comprehensive Specific Plan that contains a variety of housing and jobs-producing land uses to achieve a relatively strong jobs to housing balance within the Specific Plan boundaries so as to reduce the vehicle miles traveled in the region.
16. Implement a Specific Plan that would provide adequate funding levels necessary to adequately manage and maintain the 3,500 acres of open space adjacent to the Tracy Hills Specific Plan Area.
17. Implement the City's Infrastructure Master Plans.

1.5 HOW TO USE THIS DOCUMENT

This Specific Plan describes the proposed master planned development, establishes project development standards, describes how public improvements may be financed and maintained, and summarizes processes to administer the Plan. This Specific Plan document is divided into five chapters, the content of each is as follows:

Chapter 1 – Introduction provides an overview of the project, including the Project's location and setting, a land use summary of the Project's projected buildout, and the Project's goals.

Chapter 2 – Zoning and Development Standards details the Specific Plan's Land Use Zoning designations, permitted and conditional uses, and development standards.

Chapter 3 – Design Guidelines provides architectural guidelines for residential and non-residential development and landscape guidelines that aim to achieve the design vision and goals for the community. The Design Guidelines provide the landscape standards to establish and maintain the visual identity and character of the Tracy Hills community.

Chapter 4 – Infrastructure and Services provides a comprehensive description of the roadway system, water and recycled water supply, sanitary sewer, storm drainage, and utilities systems. A brief description of the Project's conceptual phasing plan and a financing and maintenance plan is also presented.

Chapter 5 – Administration identifies and describes the permit processes required. A permit process flow diagram is incorporated to illustrate the City's development application review process.

2 ZONING AND DEVELOPMENT STANDARDS

The Tracy Hills Specific Plan is a regulatory document, is incorporated into the City's Zoning Ordinance, and serves as the zoning for all properties within the Specific Plan area. In addition to the development standards and design guidelines (together referred to as zoning regulations or regulations) contained in this Specific Plan, properties within the Specific Plan area are subject to applicable regulations of the Tracy Municipal Code, such as parking requirements, sign regulations, and general provisions. All definitions shall be the same as in the Tracy Municipal Code. To the extent any regulation in this Specific Plan conflicts with the Tracy Municipal Code, the regulation set forth herein shall prevail.

The Tracy Hills Specific Plan applies zoning districts to each parcel, as shown in **Figure 2-1, Zoning Districts**. These zoning districts serve as the basis for all of the land use and development standards contained in the Tracy Hills Specific Plan. **Table 2-1, Permitted and Conditionally Permitted Uses**, identifies the permitted and conditionally permitted uses for each zoning district. In addition, accessory uses and temporary uses shall be allowed as provided in the Tracy Municipal Code.

Non-conforming agricultural uses existing and operating at the date of the adoption of the Tracy Hills Specific Plan shall be broadly interpreted to allow continued agricultural operations on that site until development in conformance with this Specific Plan occurs. Agricultural crops or operations may change to another, such as row crops to orchards, and properties that are temporarily left fallow can be put back into production without the property losing its non-conforming status.

In addition to the zoning and development standards contained in this chapter, the Tracy Hills Design Guidelines shall apply to all residential and non-residential projects that are subject to Development Review or Improvement Plans (see Chapter 3, Design Guidelines). However, this Tracy Hills Specific Plan only shows detailed plans for Phase 1A, as specified in Section 3.4, Landscape Design Guidelines. Therefore, prior to development of any non-agricultural use in areas other than Phase 1A, a Specific Plan Amendment shall be required, which shall include, but not be limited to the following elements (as it relates to design and location):

- Circulation
- Community Monumentation
- Streetscape and Trails
- Edge Conditions / Easements
- Conceptual Overall Illustrative Parks and Landscape Plan
- Lighting
- Walls and Fences
- Landscape Master Tree Plan

Page Intentionally Blank

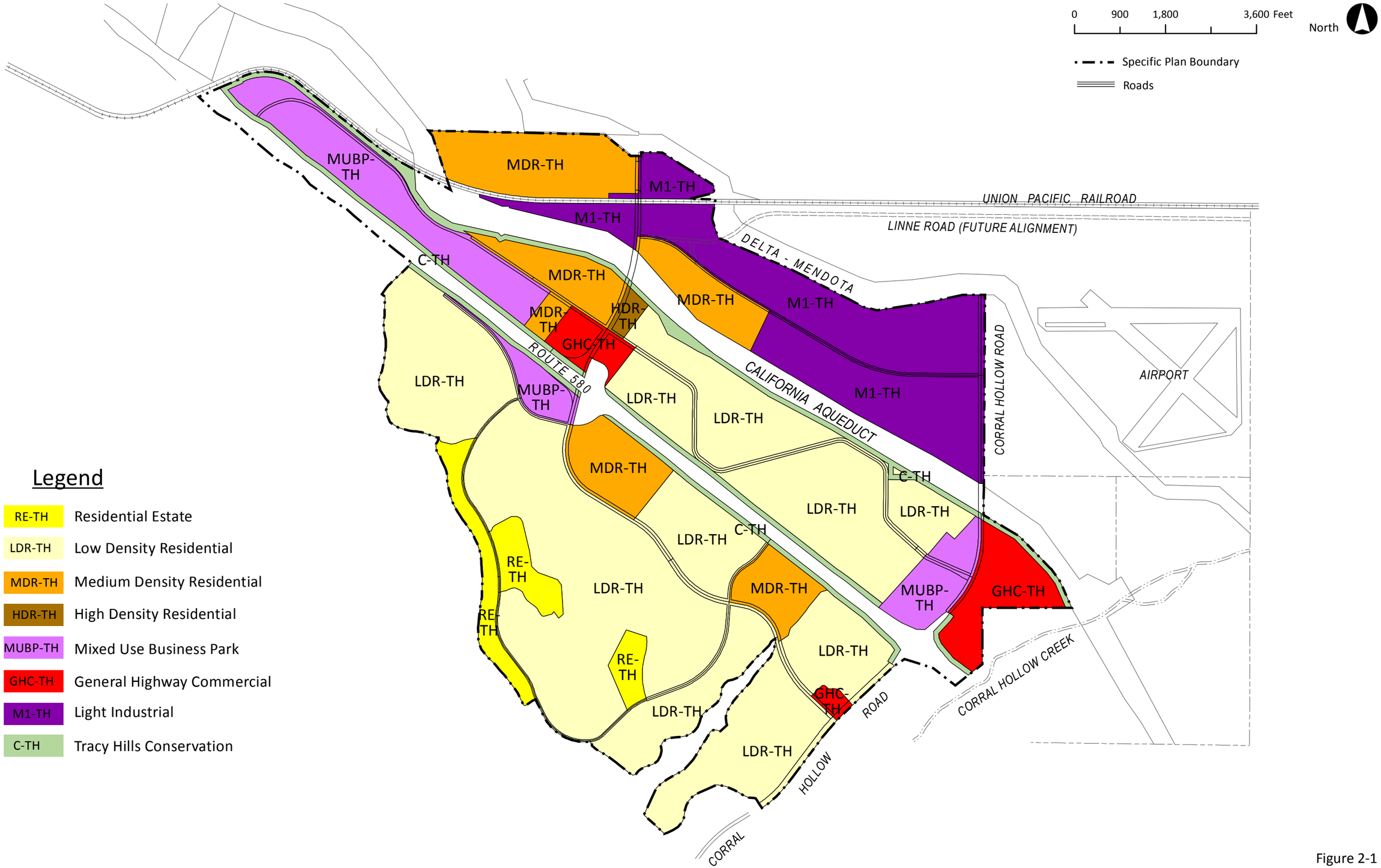

Figure 2-1
Zoning Districts

Page Intentionally Blank

TABLE 2-1
PERMITTED AND CONDITIONALLY PERMITTED USES

USES	RE-TH	LDR-TH	MDR-TH	HDR-TH	MUBP-TH	GHC-TH	M1-TH
Public Utilities	P	P	P	P	P	P	P
Crop and tree farming (the raising of tree, vine, field forage, and other plant life crops of all kinds), specialty crops (primarily conducted within structures), and community gardens	P	P	P	P	P	P	P
Single-family dwellings	P	P	P	P	NP	NP	NP
Two-family dwellings	NP	P	P	P	NP	NP	NP
Multi-family dwellings:	NP	NP	P	P	C	C	NP
Boarding and Rooming Houses	NP	NP	NP	P	NP	NP	NP
Institutional uses with residential accommodations (occupancy load of six or less), such as: • Foster homes • Homes for the aged	P	P	P	P	C	NP	NP
Educational and institutional uses with residential accommodations (occupancy load of over six), including but not limited to: • Hospitals • Nursing homes	C	C	C	C	C	C	NP
Public Facilities such as: • Fire stations • Park and neighborhood recreation (playgrounds) • Schools • Art galleries and museums • Court house and public agency administrative offices • Libraries • Meeting halls • Recreational centers • Athletic fields	P	P	P	P	P	P	P
Educational, cultural, institutional, and recreational uses, such as: • Private Schools and day care centers • Places of assembly • Golf course (private or public) • Private recreation facilities, such as fitness clubs • Private meeting halls • Private museums	C	C	C	C	P	P	C
Specialized recreational and instructional uses such as: • Arts • Athletics • Dance • Self-defense	NP	NP	NP	NP	C	P	C

TABLE 2-1
PERMITTED AND CONDITIONALLY PERMITTED USES

USES	RE-TH	LDR-TH	MDR-TH	HDR-TH	MUBP-TH	GHC-TH	M1-TH
Mobile home parks	NP	NP	NP	P	C	NP	NP
Lodging, such as: • Hotels • Motels	NP	NP	NP	NP	P	P	C
Business Offices and professional offices and laboratories, such as: • Administrative Offices • Ambulance services (when not part of hospital) • Banks • Dental laboratories, offices, and clinics • Medical laboratories, offices, and clinics • Pharmacies	NP	NP	NP	NP	P	P	C
Consumer services and retail trade such as: • Department stores • Food stores (including supermarkets) • Auto service stations, not including repair work • Hardware stores • Miscellaneous retail, excluding boats, automobiles, and other motorized vehicles • Personal services • Veterinary clinics	NP	NP	NP	NP	P(1)	P	C
Eating and/or drinking establishment without a bar	NP	NP	NP	NP	P(1)	P	C
Eating and/or drinking establishment (with or without entertainment), without serving alcohol and providing entertainment after 11:00 p.m.	NP	NP	NP	NP	P(1)	P	NP
Eating and/or drinking establishment that serves alcohol and provides entertainment after 11:00 p.m.	NP	NP	NP	NP	C(1)	C	NP
Vehicle sales service and rental	NP	NP	NP	NP	NP	NP	C
Special business, consumer, and miscellaneous repair services (serving a large area; dangerous or objectionable elements inherent because of processes employed or materials used or handled): • Animal hospitals and shelters • Miscellaneous repair shops, such as lawn mowers, chainsaws, etc. • Delivery services	NP	NP	NP	NP	NP	NP	P

TABLE 2-1
PERMITTED AND CONDITIONALLY PERMITTED USES

USES	RE-TH	LDR-TH	MDR-TH	HDR-TH	MUBP-TH	GHC-TH	M1-TH
Commercial amusement and entertainment establishments (requiring large sites and/or generating large traffic volumes): • Amusement parks • Arenas, auditoriums, and stadiums • Cinemas • Miniature Golf courses • Skating rinks • Tennis courts, commercial	NP	NP	NP	NP	C	C	C
Farm equipment sales and services	NP	NP	NP	NP	NP	NP	C
Contract construction	NP	NP	NP	NP	NP	NP	P
Warehousing and storage	NP	NP	NP	NP	NP	NP	P
Recycling collection facilities	NP	NP	NP	NP	NP	NP	P
Manufacturing uses, light, including: • Assembly of electrical appliances, electronic instruments and devices • Carpentry shops, custom wood working, and cabinet manufacturing • Laboratories • Manufacturing, compounding, processing, packaging, or treatment of such products as candy, cosmetics, drugs, perfumes, pharmaceuticals, soap, and toiletries, excluding the refining and rendering of fats and oils	NP	NP	NP	NP	C	NP	P
Manufacturing uses, intermediate: • Any production, processing, cleaning, servicing, testing, repair, or storage of materials such as food processing and canning, wineries, distilleries, and breweries, and paper products manufacturing	NP	NP	NP	NP	NP	NP	C
Manufacturing uses, including heavy and very heavy	NP	NP	NP	NP	NP	NP	NP

(1) Consumer services and retail trade, including eating and/or drinking establishments, are limited to a maximum of 25% of the MUBP-TH zoning district because the MUBP-TH zoning district is intended to primarily consist of job-generating land uses, such as administrative and corporate offices. A current inventory of land use types and specific floor areas of each tenant in the MUBP-TH zoning district shall be maintained by the Developer and provided whenever a new use or change of use is proposed.

P =	Permitted
C =	Conditionally Permitted
NP =	Not Permitted

2.1 RESIDENTIAL ZONING DISTRICTS

2.1.1 Purpose

Tracy Hills will provide a variety of housing types that accommodate a range of housing objectives, buyer needs, and affordability. It is expected that, once fully developed, Tracy Hills will accommodate a maximum of 5,499 dwelling units and an estimated population of approximately 17,650 (the California State Department of Finance estimates an average of 3.21 persons per household, as cited in the City's General Plan).

Figure 2-1, Zoning Districts, identifies four residential zoning districts. These zoning districts are Residential Estate (RE-TH, 0.5 to 2.0 dwelling units per acre), Low Density Residential (LDR-TH, 2.1 to 5.8 dwelling units per acre), Medium Density Residential (MDR-TH, 5.9 to 12.0 dwelling units per acre), and High Density Residential (HDR-TH, 12.1 to 25.0 dwelling units per acre).

The land use and development standards for the residential zoning districts of the Tracy Hills Specific Plan shall comply with all requirements that apply to the corresponding residential zoning districts in the Tracy Municipal Code, except as modified within this Specific Plan. (Refer to **Table 2-2, Residential Zoning Districts**).

TABLE 2-2
RESIDENTIAL ZONING DISTRICTS

Tracy Hills Specific Plan Residential Zoning Districts	Tracy Municipal Code Corresponding Zoning Districts
RE-TH	RE
LDR-TH	LDR
MDR-TH	MDR
HDR-TH	HDR

2.1.2 Permitted and Conditionally Permitted Uses Within Residential Zoning Districts

Table 2-1, Permitted and Conditionally Permitted Uses, indicates uses permitted within each residential zoning district of the Tracy Hills Specific Plan. The table also lists conditional uses that are subject to the granting of a Conditional Use Permit.

2.1.3 Development Standards for RE-TH, LDR-TH, MDR-TH, and HDR-TH

TABLE 2-3
DEVELOPMENT STANDARDS - RESIDENTIAL ZONING DISTRICTS

Development Standard	RE-TH	LDR-TH	MDR-TH	HDR-TH
Allowable Density Range	0.5 to 2.0 DU/AC	2.1 to 5.8 DU/AC	5.9 to 12.0 DU/AC	12.1 to 25.0 DU/AC
Maximum Lot Coverage(8)	45%	45%	45%	45%
Minimum Lot Size	15,000 s.f.	3,900 s.f.	3,500	(1)
Minimum Lot Width	45' minimum at street frontage	45' minimum at street frontage	45' minimum at street frontage	(1)
Minimum Front Yard Setback(2)(3)(4)	30 feet	10 feet	10 feet	15 feet
Minimum Front Yard Setback(2)(3)(4) Garage	30 feet	20 feet	20 feet	
Minimum Side Yard Setback(2)(3)(6)	10 feet	5 feet	5 feet	15 feet, street side; 10 feet interior side
Minimum Rear Yard Setback(2)(4)	30 feet	10 feet	10 feet	10 feet
Maximum Building Height(7)	35 feet	35 feet	35 feet	35 feet

(1) To be determined upon approval of the Tentative Subdivision Map: The developer shall demonstrate that every lot has size and dimensions capable of meeting the land use, public utilities, and development standards of this Specific Plan.

(2) Any building / structure shall maintain minimum setbacks from the following pipelines:
(refer to figure 1-4, Existing Conditions, for general location of pipeline easements)

- Phillips 66: minimum 5 feet from the edge of the pipeline easement
- Shell: minimum 10 feet from the edge of the pipeline easement
- PG&E and Chevron: minimum 15 feet from the edge of northeast side the pipeline easement and minimum 20 feet from the edge of the southwest side of the pipeline easement.

(3) All setbacks measured from property line.

(4) There shall be no parking in the front yard between the house and the public right-of-way, except in the driveway.

(5) For rear yard, minimum setback is 5 feet for detached garage.

(6) For all corner lots, the minimum street side yard setback is 10 feet.

(7) Detached accessory structures that encroach into the rear or side yard setbacks shall have a maximum height of 10 feet.

(8) Maximum Lot Coverate up to 55% shall be permitted for single story elevation.

2.2 GENERAL HIGHWAY COMMERCIAL ZONING DISTRICT

2.2.1 Purpose

The purpose of the General Highway Commercial (GHC-TH) Zone is to provide a mix of retail and services for local residents and travelers.

2.2.2 Permitted and Conditionally Permitted Uses Within GHC-TH

Table 2-1, Permitted and Conditionally Permitted Uses, indicates uses permitted within the General Highway Commercial zoning district of the Tracy Hills Specific Plan. The table also lists conditional uses that are subject to the granting of a Conditional Use Permit.

2.2.3 Development Standards for GHC-TH

Development Standards shall be in accordance with the Tracy Municipal Code Chapter 10.08, Zoning Regulations, Article 19, General Highway Commercial Zone (GHC), except as modified within this Specific Plan.

TABLE 2-4
DEVELOPMENT STANDARDS – GENERAL HIGHWAY COMMERCIAL ZONING DISTRICT

Development Standard	General Highway Commercial Zoning District
Maximum Lot Coverage	No Requirement
Minimum Lot Size	(1)
Minimum Lot Width	(1)
Minimum Front Yard Setback(2)	No Requirement
Minimum Interior Side Yard Setback (2)(3)	No Requirement
Minimum Street Side Yard Setback(2)	No Requirement
Minimum Rear Yard Setback (2)(3)	No Requirement
Maximum Building Height	45 feet

(1) No subdivision or lot line adjustment shall be approved or lots otherwise created with size or dimensions rendering it incapable of meeting the land use, public utilities, or development standards of this Specific Plan.

(2) Any building / structure shall maintain minimum setbacks from the following pipelines:
(refer to figure 1-4, Existing Conditions, for general location of pipeline easements)

- Phillips 66: minimum 5 feet from the edge of the pipeline easement
- Shell: minimum 10 feet from the edge of the pipeline easement
- PG&E and Chevron: minimum 15 feet from the edge of northeast side the pipeline easement and minimum 20 feet from the edge of the southwest side of the pipeline easement.

(3) No Requirement, except when adjacent to a residential zoning district, in which case 15 feet shall be required. Such yards shall be increased by 4 feet for every story above the ground floor or 10 feet in height above 25 feet, whichever is less.

2.3 MIXED USE BUSINESS PARK ZONING DISTRICT

2.3.1 Purpose

The Mixed Use Business Park (MUBP-TH) zoning district allows a broad range of commercial, institutional and business uses to serve the community and provide employment opportunities. The primary land uses are intended to be focused on job-generating land uses such as administrative and corporate offices.

2.3.2 Permitted and Conditionally Permitted Uses Within MUBP-TH

Table 2-1, Permitted and Conditionally Permitted Uses, indicates uses permitted within the Mixed Use Business Park zoning district of the Tracy Hills Specific Plan. The table also lists conditional uses that are subject to the granting of a Conditional Use Permit.

Consumer services and retail trade, including eating and/or drinking establishments, are limited to a maximum of 25% of the MUBP-TH zoning district because the MUBP-TH zoning district is intended to primarily consist of job-generating uses, such as administrative and corporate offices. A current inventory of land use types and specific floor areas of each tenant in the MUBP-TH zoning district shall be maintained by the Developer and provided whenever a new use or change of use is proposed.

2.3.3 Development Standards for MUBP-TH

Development standards shall be in accordance with Tracy Municipal Code Chapter 10.08, Zoning Regulations, Article 19, General Highway Commercial Zone (GHC), except as modified within this Specific Plan. Development Review for all buildings, structures, and site development in the MUBP-TH zoning district shall be required as provided in the Tracy Municipal Code. A development plan for undeveloped areas adjacent to the MUBP-TH site being developed, shall be submitted and approved as part of the Development Review process. The development plan shall be prepared and submitted containing a traffic circulation plan showing the adequacy of circulation including the streets, access ways, pedestrian connections between the buildings and between the buildings and the public sidewalks, and parking, and a unified and organized arrangement of the buildings and service facilities which are feasible for the site. The development plan shall contain information showing compliance with the requirements of the Tracy Hills Specific Plan. The development plan concept that is submitted for Development Review shall demonstrate compatibility with adjacent land uses and/or structures. All improvements shall be consistent with the approved development plan.

TABLE 2-5
DEVELOPMENT STANDARDS – MIXED USE BUSINESS PARK ZONING DISTRICT

Development Standard	Mixed Use Business Park Zoning District
Maximum Lot Coverage	No Requirement
Minimum Lot Size	(1)
Minimum Lot Width	(1)
Minimum Front Yard Setback(2)	No Requirement
Minimum Interior Side Yard Setback (2)(3)	No Requirement
Minimum Street Side Yard Setback(2)	No Requirement
Minimum Rear Yard Setback (2)(3)	No Requirement
Maximum Building Height(4)	45 feet

(1) No subdivision or lot line adjustment shall be approved or lots otherwise created with size or dimensions rendering it incapable of meeting the land use, public utilities, or development standards of this Specific Plan.

(2) Any building / structure shall maintain minimum setbacks from the following pipelines:
(refer to figure 1-4, Existing Conditions, for general location of pipeline easements)

- Phillips 66: minimum 5 feet from the edge of the pipeline easement
- Shell: minimum 10 feet from the edge of the pipeline easement
- PG&E and Chevron: minimum 15 feet from the edge of northeast side the pipeline easement and minimum 20 feet from the edge of the southwest side of the pipeline easement.

(3) No Requirement, except when adjacent to a residential Zoning District, in which case 15 feet shall be required. Such yards shall be increased by 4 feet for every story above the ground floor or 10 feet in height above 25 feet, whichever is less.

(4) The Community Gateway Icon, which is conceptually described and depicted in Section 3.4.5, Community Monumentation, shall have a maximum height of 50 feet.

2.4 LIGHT INDUSTRIAL ZONING DISTRICT

2.4.1 Purpose

The Light Industrial (M1-TH) zoning district allows for manufacturing and other industrial facilities.

2.4.2 Permitted and Conditionally Permitted Uses Within M1-TH

Table 2-1, Permitted and Conditionally Permitted Uses, indicates uses permitted within the Light Industrial zoning district of the Tracy Hills Specific Plan. The table also lists conditional uses that are subject to the granting of a Conditional Use Permit.

2.4.3 Development Standards for M1-TH

Development Standards shall be in accordance with the Tracy Municipal Code Chapter 10.08, Zoning Regulations, Article 20, Light Industrial Zone (M-1), except as specified herein.

TABLE 2-6
DEVELOPMENT STANDARDS - LIGHT INDUSTRIAL ZONING DISTRICT

Development Standard	Light Industrial Zoning District
Maximum Lot Coverage	No Requirement
Minimum Lot Size	(1)
Minimum Lot Width	(1)
Minimum Front Yard Setback (2)	No Requirement
Minimum Interior Side Yard Setback (2)(3)	No Requirement
Minimum Street Side Yard Setback (2)	No Requirement
Minimum Rear Yard Setback (2)(3)	No Requirement
Maximum Building Height	45 feet

(1) No subdivision or lot line adjustment shall be approved or lots otherwise created with size or dimensions rendering it incapable of meeting the land use, public utilities, or development standards of this Specific Plan.

(2) Any building / structure shall maintain minimum setbacks from the following pipelines:
(refer to figure 1-4, Existing Conditions, for general location of pipeline easements)

- Phillips 66: minimum 5 feet from the edge of the pipeline easement
- Shell: minimum 10 feet from the edge of the pipeline easement
- PG&E and Chevron: minimum 15 feet from the edge of northeast side the pipeline easement and minimum 20 feet from the edge of the southwest side of the pipeline easement.

(3) No Requirement, except when adjacent to a residential zone, in which case 15 feet shall be required. Such yards shall be increased by 4 feet for every story above the ground floor, or 10 feet in height above 25 feet, whichever is less.

2.5 TRACY HILLS CONSERVATION ZONING DISTRICT

2.5.1 Purpose

The purpose of the Tracy Hills Conservation (C-TH) zoning district is to restrict development on areas adjacent to the California Aqueduct and Interstate 580.

2.5.2 Permitted and Conditionally Permitted Uses Within C-TH

No development within these areas will be allowed except for installation of landscape materials, irrigation, and protective fencing. Refer to Chapter 3, Design Guidelines, for the typical enhancements and treatment of edge conditions for the C-TH zoning district.

2.5.3 Development Standards for C-TH

Design of areas in the C-TH zoning district will be in accordance with Chapter 3, Design Guidelines.

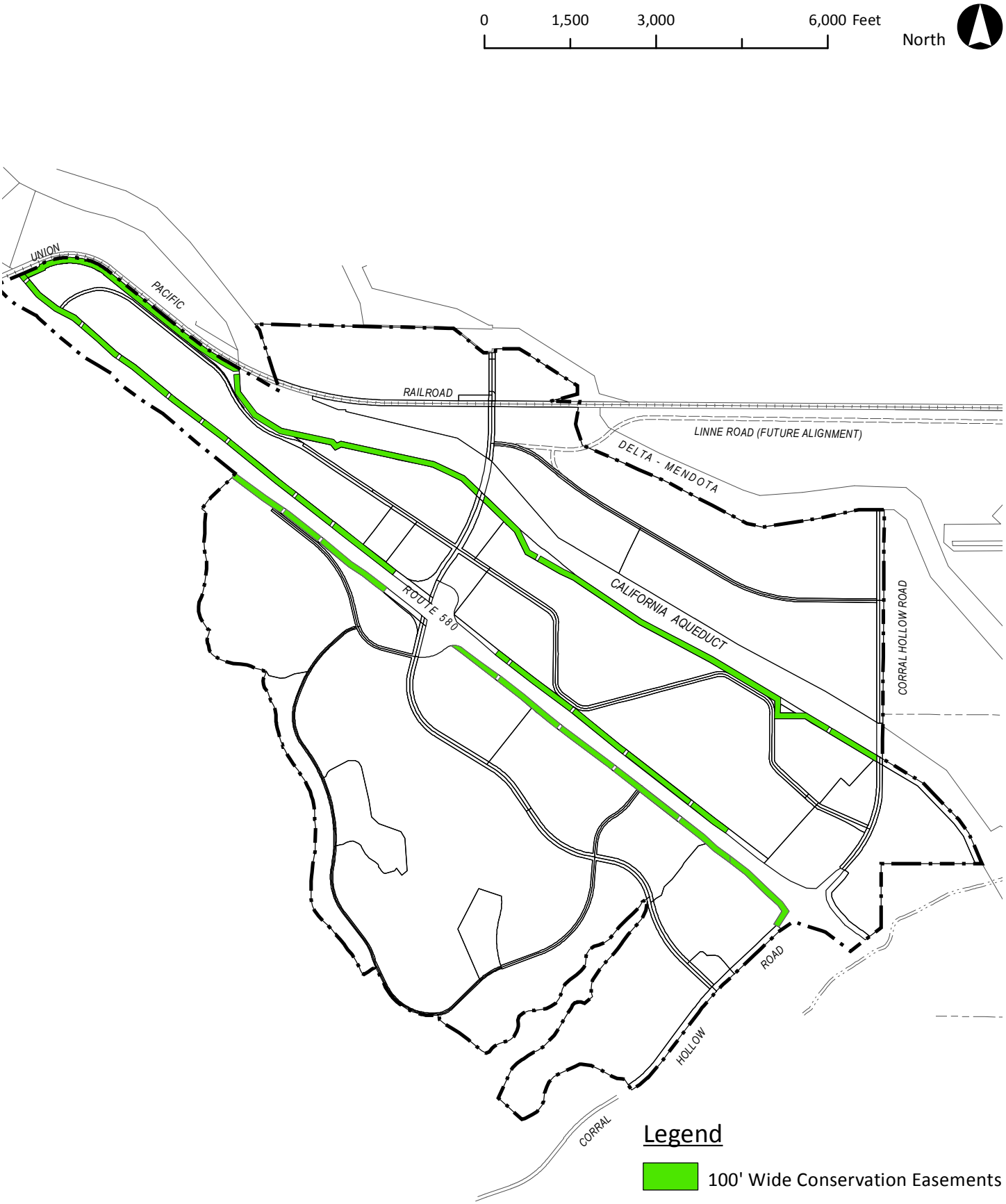

Figure 2-2

100' Wide Conservation Easements

TRACY HILLS

Specific Plan

Page Intentionally Blank

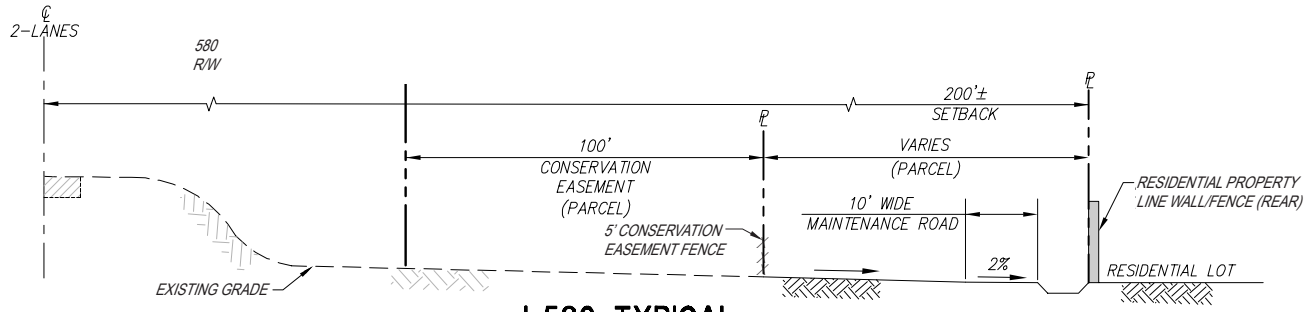

I-580 TYPICAL

NOT TO SCALE

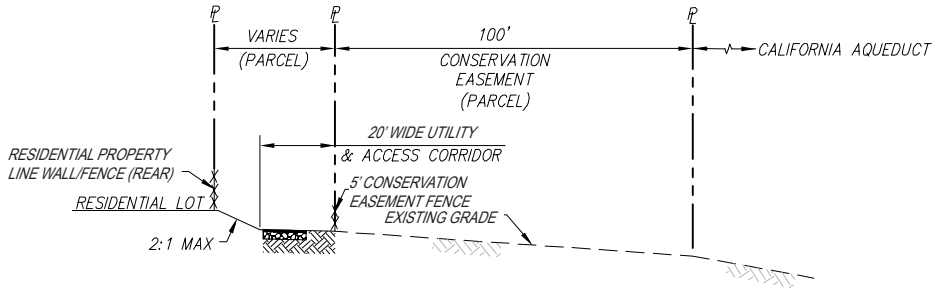

CALIFORNIA AQUEDUCT TYPICAL

NOT TO SCALE

NOTE: SEE CHAPTER 3, DESIGN GUIDELINES, SECTION 3.4.7, EDGE CONDITIONS, FOR ADDITIONAL DETAILS

Figure 2-3

Conservation Easement Typical Cross Sections

Page Intentionally Blank

2.6 OTHER LAND USES

2.6.1 Parks/Recreation

Active and passive park and recreation facilities will be provided within the Specific Plan area in a variety of forms at a minimum rate of three acres of neighborhood park land and one acre of community park land per 1,000 population, in accordance with the City of Tracy Parks Master Plan. The tentative subdivision maps within the Specific Plan may have less than three acres of neighborhood park land per 1,000 residents or one acre of community park land per 1,000 residents, due to the size, shape, location, accessibility, or other characteristics of any single tentative map. The community park will be located as otherwise described in the Specific Plan. The Specific Plan also provides for HOA maintained park and recreation facilities in addition to the neighborhood and community park land.

Therefore, prior to each residential tentative subdivision map approval, an analysis shall be required of the amount of neighborhood and community park land provided within the entire Specific Plan area. Each tentative subdivision map shall either include adequate neighborhood park land to bring the total neighborhood park land within the tentative-map-approved portion of the Specific Plan to three acres per 1,000 population, or the developer shall demonstrate how future tentative map areas of the Specific Plan will include park land to achieve the minimum three acres per 1,000 population requirement, and otherwise comply with the Parks Master Plan.

After dedication to the City, most park and recreation facilities will be under the jurisdiction of the City Public Works Department and will be operated and maintained by the City for the enjoyment of all residents of Tracy. The Park sites shown on Figure 1-3, Land Use Concept, and Figure 2-4, Public Facilities Plan, indicate conceptual park locations. Parks may include community or neighborhood parks with active and passive recreation. These parks may feature play fields, ball fields, children play areas, picnic areas, tennis courts, open lawn areas, or other amenities including a park located at an elevated location to provide a “view park”. All parks in Tracy Hills are envisioned to be interconnected by trails and bikeways within parkways, public streets, open space, and utility corridors. Community and neighborhood park design shall comply with the City of Tracy Parks Master Plan with final design approved by the City.

Approximately 180 to 185 acres will be provided for a Tracy Hills Community / Open Space Park to the south of the I-580, and is conceptually shown on Figure 1-3, Land Use Concept, and Figure 2-4, Public Facilities Plan. It is envisioned that the Community / Open Space Park will be designed and improved for scenic and visual enjoyment, provide outdoor recreation opportunities, improve public health and safety, preserve natural resources and control the urban form. The Community /Open Space Park area is subject to final design approval by the City and at a minimum could include both passive and active features including a nature trail system and pathways that can be used for hiking, walking, biking and jogging, picnic and sitting areas, lawn areas, nature viewing areas, disc golf, and/or golf course. In specific areas of the open space, enhancements may be incorporated into the final design through the planting of native landscape as passive open space and for habitat improvement. The conceptual design of the 180 to 185 acres including the 30 acres of community park will occur with the first subdivision map south of I-580. The Community / Open Space Park will be improved in phases with development of Tracy Hills south of I-580.

The 180 to 185 acres of Community / Open Space Park is contrasted with the 100-foot wide conservation easements (described in Section 2.5, Tracy Hills Conservation Zoning District) in that the Community / Open Space Park will be design for active and passive recreation, accessible to the public; and the 100-foot wide conservation easements will not be accessible to the public.

2.6.2 School Sites

Three public school sites are shown on **Figure 1-3, Land Use Concept,** and **Figure 2-4, Public Facilities Plan**. Final locations, numbers, size and configurations of school sites will be determined in consultation with the appropriate School District. In the event the School District does not use, purchase and/or develop a school site, these sites may be developed consistent with zoning development standards.

2.6.3 Public Infrastructure

Public infrastructure includes such items as water tanks, pump stations, drainage basins, and/or dry utility facilities, both interim and permanent. Final locations, numbers, size and configurations of these facilities will be constructed pursuant to the master infrastructure plans. Refer to **Figure 2-4, Public Facilities Plan** for conceptual locations and to Chapter 4, Infrastructure and Services, for more detailed discussion.

2.7 OTHER STANDARDS

2.7.1 Noise

Residential land uses may be sited where noise from I-580 falls within the Conditionally Acceptable range, identified in Figure 9-3 of the City of Tracy General Plan. Such determination shall be made by the City at the time of Tentative Map (or other discretionary application) approval. In making such determination, the City shall take into account the effect of feasible noise reduction measures on the anticipated noise levels at the proposed residential uses, as well as the project's conformance with other General Plan goals, objectives, and policies.

2.8 AIRPORT LAND USE COMPATIBILITY

The Tracy Municipal Airport is located to the east of the Specific Plan area. A portion of the Specific Plan area is located within the Tracy Municipal Airport's Area of Influence (AIA). Land uses within certain zones in the vicinity of the airport are regulated by the San Joaquin County Airport Land Use Commission (ALUC). The San Joaquin Council of Governments serves as the ALUC and has adopted the San Joaquin County Airport Land Use Commission Plan (ALUCP) in 2009. The area of the Specific Plan located along Corral Hollow Road directly south of the Delta-Mendota Canal is designated as Light Industrial (M-1) and lies in the Inner Approach/Departure Zone and Inner Turning Zone as specified in the 2009 ALUCP for the Tracy Municipal Airport (Refer to Figure 2-5, Tracy Municipal Airport Land Use Compatibility Zones). Land uses in these zones are regulated by the ALUC and shall comply with the adopted ALUCP.

Figure 2-4

Public Facilities Plan

TRACY HILLS

Specific Plan

Page Intentionally Blank

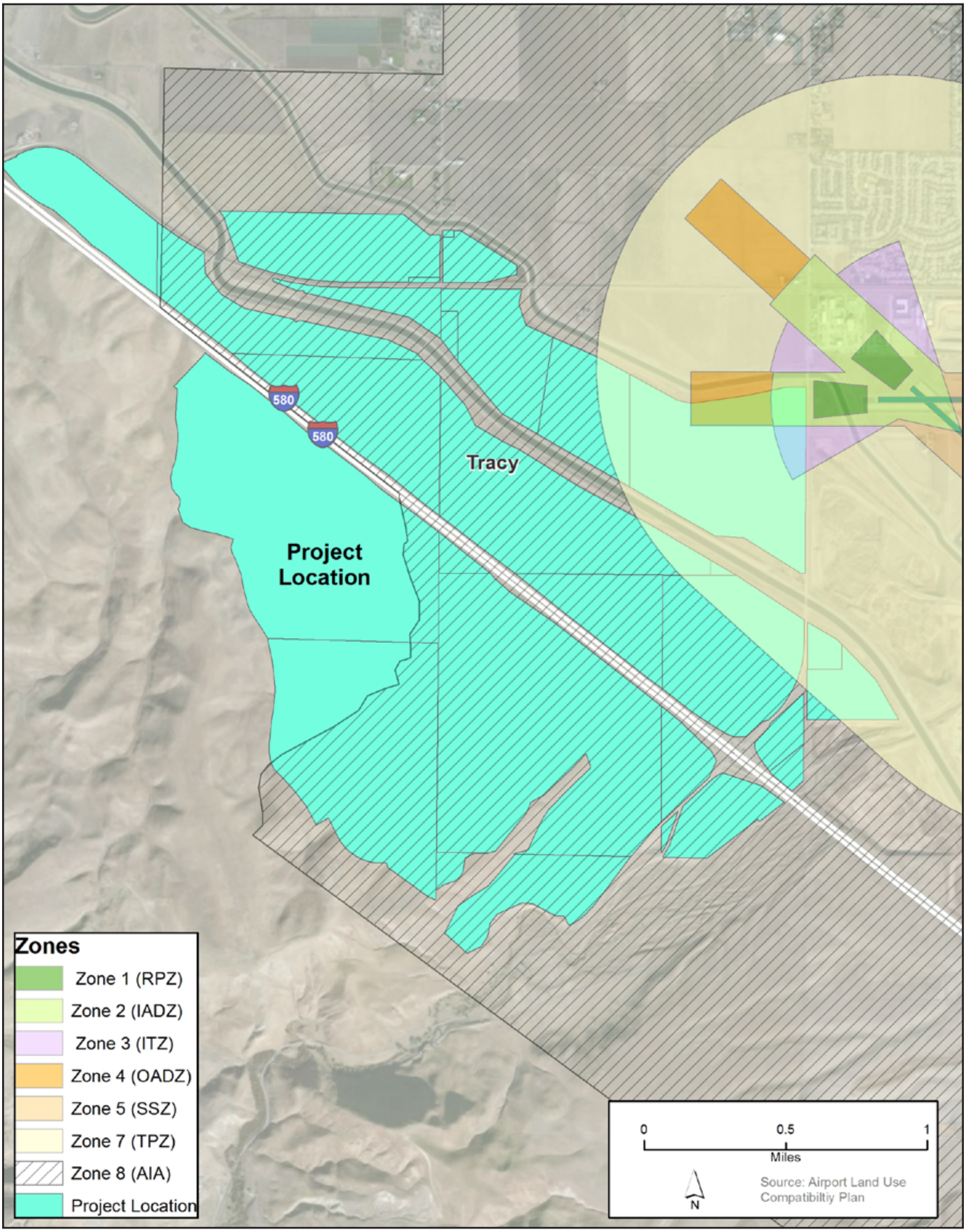

Figure 2-5

Tracy Municipal Airport Land Use Compatibility Zones

Page Intentionally Blank

3 DESIGN GUIDELINES

3.1 INTRODUCTION

3.1.1 Purpose & Objective

The Tracy Hills Design Guidelines are a vital part of the Tracy Hills Specific Plan. These guidelines are an implementation tool for the development of Tracy Hills.

As a regulatory tool, these guidelines will assist applicants in creating neighborhoods that reflect the City's history, reinforce the sense of community, and utilize sustainable best practices. These guidelines will be the framework for the design of Tracy Hills.

The Design Guidelines are structured into three main parts: Residential, Mixed Use Business Park Zone District, and Landscape. Each of these three sections contains sub-sections that are identified in the City of Tracy General Plan and City of Tracy Design Goals and Standards as integral components to the development and maintenance of neighborhoods with character and quality.

The Residential and Mixed Use Business Park Design Guidelines shall apply Specific Plan-wide. The Landscaping Guidelines shall also apply Specific Plan-wide, however, implementation details are only illustrated for Phase 1A. Subsequent phases shall require additional detail prior to approval of any post Phase 1A Tentative Map.

In addition to these Tracy Hills Design Guidelines, the City of Tracy Design Goals and Standards shall apply Specific Plan-wide for all types of development.

3.2 RESIDENTIAL DESIGN GUIDELINES

The Tracy Hills Residential Design Guidelines contains five sections that aim to achieve the vision for Tracy Hills. These guidelines build on the City's Design Goals and Standards for residential design and apply to single family residential buildings in Tracy Hills. Multi-family residential buildings in Tracy Hills shall refer to the City of Tracy's Design Goals and Standards.

At the end of these Residential Design Guidelines is a checklist that provides a quick reference of the desired residential development for Tracy Hills.

How to Use these Guidelines Effectively

1. *Conduct Document Review of the Following:*

    - Tracy Hills Specific Plan
    - Vesting Tentative Map
    - City of Tracy Design Goals and Standards

2. *Review these Residential Guidelines Which Contain the Following Five Sections:*

    - Scale: roofs, massing, and proportions
    - Architectural Streetscape: windows, garages, materials and colors
    - Variation: plans and elevations
    - Architectural Character and Styles
    - Residential Design Guidelines Checklist

3.2.1 Scale

Scale refers to the massing and form of a building and includes elements such as building height and footprint. Depending on how a building is designed, it can either positively or negatively affect the character of a neighborhood and quality of the streetscape experience.

The guidelines below provide for the ability to create an inviting environment that considers the pedestrian and motorist experience throughout the neighborhood as it relates to visual interest and comfort in a space.

1. Massing and Building Form

- In general, building form shall allow for the creation of multiple usable zones that offer private and public spaces for residents.
- To create interest along the streetscape, building massing shall be varied through the staggering of horizontal and vertical planes. To this end, no building wall shall extend more than 25' vertically or horizontally without a visual break created by a 2' minimum offset or architectural detail.
- At least 25% of buildings within a neighborhood shall have a building mass which combines single and two story forms. Examples of forms include, but are not limited to a one story porch and a second level pop-out.

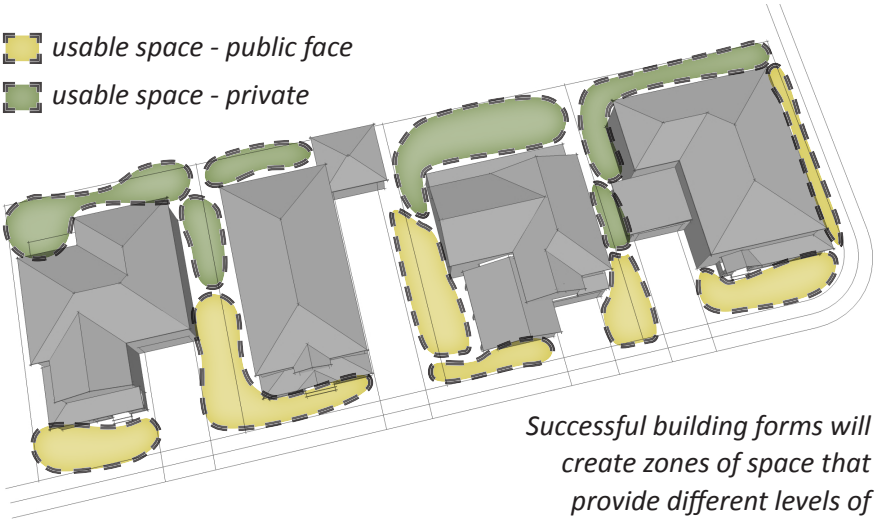

Successful building forms will create zones of space that provide different levels of privacy.

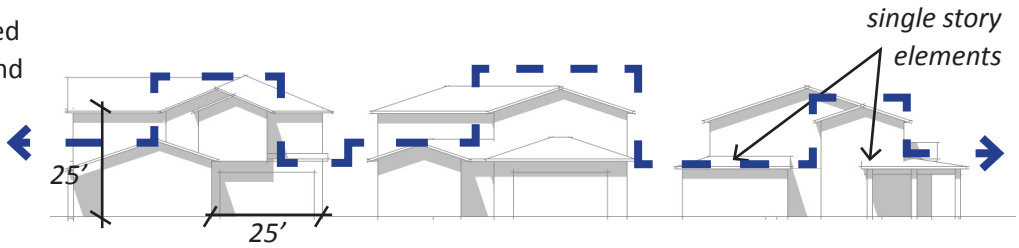

Breaks in massing along vertical and horizontal planes provide interest along the streetscape.

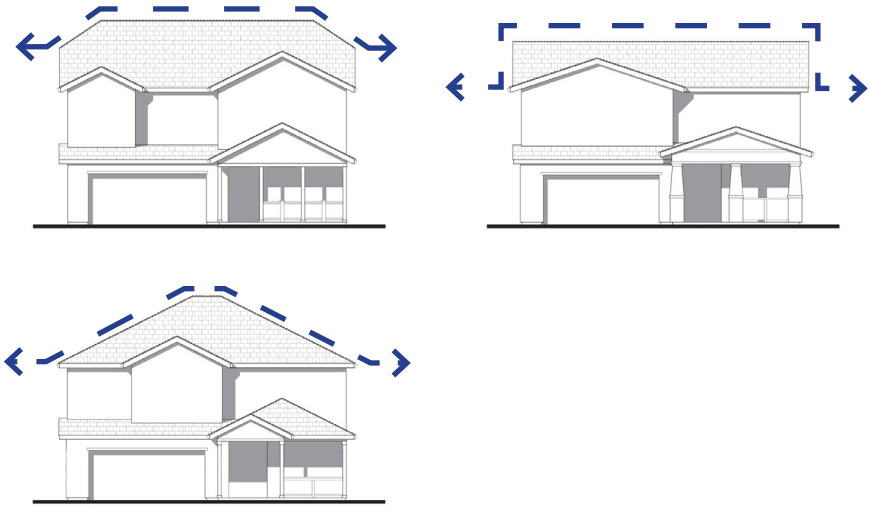

Example of the same building plan with different roof form options.

Variety of roof forms can include gable, hip, and shed types.

Roof design and materials that reflect the architectural style of a building help enhance the overall streetscape.

2. Roof Forms, Materials, and Colors

- Create a diversity of roof forms for an articulated streetscape by providing at a minimum three different roof plans per building plan.
- Flat roofs are not allowed. Gable, hip, and shed roof types are allowed.
- Variety of roof colors and materials are encouraged between homes to promote diversity and interest.
- Roof materials shall be of high quality and complementary to the overall design of the building. Roof materials can include concrete or clay tile or architectural grade composition shingle.
- Additionally, materials shall not produce glare and should consider environmental benefits (i.e. lighter color roofs to reflect heat).
- Photovoltaic (PV) electricity generation is encouraged in all residential neighborhoods. PV panels and their component parts should be designed to be as aesthetically compatible as possible, but are not subject to Development Review.

3.2.2 Architectural Streetscape

The streetscape is an important component of the public realm that helps define a neighborhood's character and experience. In the broadest sense, the streetscape encompasses the area between building fronts around a public space, such as a street or alley, and includes, but is not limited to, the elements of windows, garages, building materials and colors, and building details.

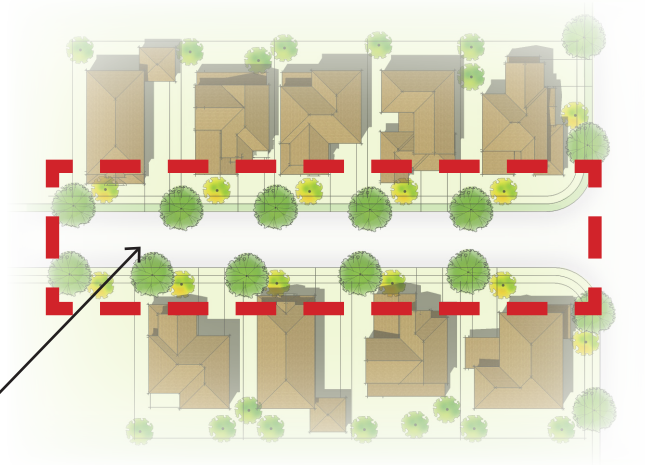

The streetscape is the area bounded by building fronts.

1. Windows

- Window size and patterns shall be based on the architectural style of the building.
- All windows shall have trim surrounds, headers, or sills.
- Buildings with the same window locations, regardless of different elevation style, shall not be located next to each other (see graphic example).

NOT ALLOWED

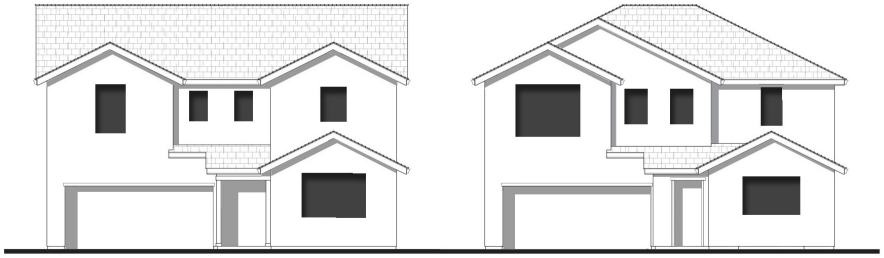

Buildings with the same window location are not allowed next to each other.

ALLOWED

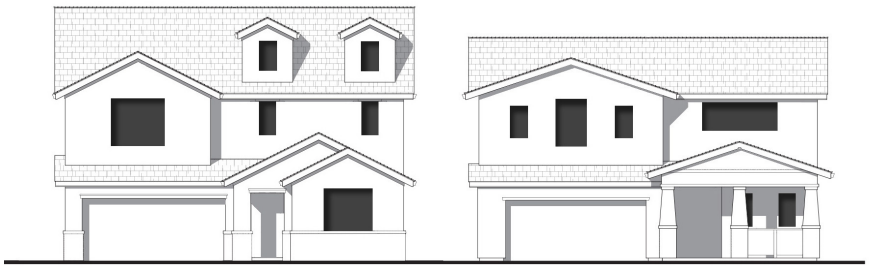

Buildings next to each other with different window locations avoid monotony.

deep recessed garage *alley-entry garage* *recessed garage* *side-entry garage*

Garages are setback and designed to complement overall design.

Variation in garage locations provides interest in the streetscape.

2. Garages

- Within a neighborhood (defined as up to 200 dwelling units) there shall be a minimum of three garage door designs provided to avoid monotony along the streetscape. Each garage door design shall be used in at least 25% of the neighborhood.
- To minimize building bulk and the focus on vehicular elements, a maximum of two car garage bays shall front to the street.
- Garages shall be designed so they are not the primary focus in the streetscape and will be complementary to the rest of the home.
- Driveways shall have a maximum width of 18' (measured at property line) so that it will not negatively impact the streetscape and walkability of the neighborhood.

3. Building Materials and Colors

- Buildings shall use high quality, durable materials such as siding, textured/ finished stucco, brick and stone. Other materials indicated in the Architectural Character section are allowed.
- Materials and colors shall be varied to add texture and depth to the overall character of the neighborhood.
- Materials and colors palette should be comprised of three or more complementary options that cover a base color, trim color, and accent color.
- Use of flashy materials or colors that will not integrate with the overall character of neighborhood is not allowed.
- Material and color blocking shall not terminate at outside corners of buildings and shall wrap to appropriate transition points.

4. Details

- Building details shall be consistent with the architectural style and overall building design. To this respect, detail elements such as shutters, planter boxes, and trim shall be proportional in size to the element they are enhancing.
- To create visual interest, details/ architectural articulations shall occur wherever the building is visible from the public street.
- Wrap details around corners of buildings where appropriate to ensure that they do not look "tacked on".

A balanced palette of textures and colors enhances the streetscape experience.

Colors and materials that complement each other elevate the design of a home.

These shutter details are proportional to the window and are also functional.

Chimneys or other architectural breaks make good material transition areas.

Diversity of floor plans provides interest to the streetscape.

3.2.3 Variation

Diversity and variation in building plans and elevations is important in the development and maintenance of an overall neighborhood character and the creation of place. Successfully executed, diversity and variation of buildings offers a neighborhood a distinct yet cohesive built pattern that can extend to the larger community fabric.

The variation requirements below help to promote a visually interesting and balanced streetscape that can expand on and integrate into the larger context.

Different elevations along the streetscape make for a more interesting experience.

A successful combination of different building plans and elevations offer each home an individuality that harmonizes with other homes at the neighborhood scale.

1. **Plans and Elevations**
   - Refer to building plans and elevation requirements in the Residential Design section of The City of Tracy Design Goals and Standards regarding a minimum mix of floor plans and elevations.
   - In addition to the variation requirements of The City of Tracy Design Goals and Standards, in general, the following shall apply:
     - » Maximum of three houses of the same style may be located next to each other.
     - » Elevations may be repeated on the same block or facing each other on the other side of the street only if they contain a different materials and color palette.
     - » No two houses of the same elevation and floor plan shall be next to each other.

3.2.4 Architectural Character and Styles

The architectural character of the homes of Tracy Hills will draw on the history and identity of the City and its surrounding areas. Buildings in Tracy exhibit architectural characteristics that can be termed "Americana," as described below.

Americana architecture is an evolution of styles taken from the old world, changing to reflect local environments as it developed over time from the east coast to the west coast. Often times Americana architecture will be influenced by a particular style and adapted to its regional context, transforming through the use of materials and colors and building details and articulation.

Within the umbrella of Americana architecture are numerous and varying architectural styles. This includes Country European, Victorian Revival, Western Farmhouse, Craftsman Bungalow, Colonial, Early California, and Mediterranean Revival. For Tracy Hills, interpretation of all the Americana styles would be applicable, however the most appropriate would be Country European, Western Farmhouse, Victorian Revival, and Craftsman Bungalow, as these four styles are most reflective of area's with rich agricultural history.

Image examples and style characteristics of the Americana styles are provided to help guide the development of future residential buildings of Tracy Hills. These examples are for concept inspiration and not intended as the final product. The homes of Tracy Hills will capture the quality exhibited by the styles of Americana buildings while adhering to the Tracy Hills Design Guidelines.

All residential architecture in Tracy Hills shall exemplify the characteristics of one of the architectural styles on the following pages.

Former Tracy High School- Mediterranean Revival

Historic Tracy Homes- Victorian Revival

Tracy Historical Museum- Early California

First Presbyterian Church- Early California

COUNTRY EUROPEAN

IDENTIFYING CHARACTERISTICS	
-Asymmetrical massing -Medium to steeply pitched hip or gable roofs -Enhanced entry ways	
TYPICAL CHARACTERISTICS	
Roof Form	-Typical 6:12 to 8:12 roof pitch -12” to 14” eaves -Tight to 12” rakes -Often punctuated with small dormers
Roof Materials	-40-year dimensional composition shingles or smooth flat concrete tile
Entry Ways	-Decorative stone veneer -Pitch break
Windows	-Casement windows -Symmetrical -Tall and narrow
Exterior Materials	-Brick and/or stone veneer -Stucco finish
Trim Detail	-6” to 8” fascia -Wood or smooth foam trim
Ornamentation	-Decorative wood half-timbering -Decorative stone veneer

Representative Two Story Elevation

Entry Way Pitch Break

Stone Veneer

Casement Windows

Narrow Windows

Representative Single Story Elevation

Representative Single Story Elevation

Wood Window Shutters

Board and Batten Siding

Standing Seam Metal and Shingle Roofing

Wood Beams and Brackets

Representative Two Story Elevation

WESTERN FARMHOUSE

IDENTIFYING CHARACTERISTICS	
-Asymmetrical massing -Shed and gable roofs -Porch fronts	
TYPICAL CHARACTERISTICS	
Roof Form	-Typical 4:12 to 6:12 roof pitch -12” to 24” eaves -6” to 12” rakes
Roof Materials	-40-year dimensional composition shingles -Standing seam metal roofing
Entry Ways	-Broad front porch supported by square posts or columns with decorative brackets -Wood beams and brackets
Windows	-Single hung windows -Fixed accent windows
Exterior Materials	-Board and batten accent siding -Lap siding with 6” exposure -Brick and/or stone veneer -Stucco finish
Trim Detail	-Wood brackets and/or kickers -Wood or smooth foam trim
Ornamentation	-Wood window shutters

VICTORIAN REVIVAL

IDENTIFYING CHARACTERISTICS	
-Eclectic, asymmetrical massing -Steeply pitched gable roofs -Detailed trim	
TYPICAL CHARACTERISTICS	
Roof Form	-Typical 6:12 to 8:12 roof pitch -12” to 14” eaves -3” to 12” rakes -Variety with gables, dormers, and turrets or towers
Roof Materials	-40-year dimensional composition shingles
Entry Ways	-Occasional pediment over porches -Decorative wood porch posts
Windows	-Single hung windows -Bay windows and/or oriels
Exterior Materials	-Clap board siding -Brick and/or stone veneer -Occasional stucco finish
Trim Detail	-6” to 8” fascia -Decorative brackets
Ornamentation	-Patterned brick and/or stone veneer -Ornamental spindles -Boxed eaves or decorative cornice

Representative Two Story Elevation

Clap Board Siding

Bay Window

Gable Roof Forms

Pediment Over the Porch

Representative Single Story Elevation

Representative Single Story Elevation

Fixed Accent Windows

Square Porch Posts

Lap Siding

Decorative Knee Braces

Representative Two Story Elevation

CRAFTSMAN BUNGALOW

IDENTIFYING CHARACTERISTICS	
-Asymmetrical massing -Low-pitched gable and/or hip roofs -Projecting eaves	
TYPICAL CHARACTERISTICS	
Roof Form	-Typical 3:12 to 4:12 roof pitch -12” to 14” eaves -3” to 12” rakes -Accent roofs
Roof Materials	-40-year dimensional composition shingles
Entry Ways	-Wood or stucco square porch posts
Windows	-Single hung windows -Fixed accent windows -Vertically proportioned windows
Exterior Materials	-Lap siding with 4” to 8” exposure -Brick and/or stone veneer -Stucco finish
Trim Detail	-Thickened stucco wainscots -Battered walls at select elements -Decorative knee braces
Ornamentation	-Wood brackets and/or kickers

COLONIAL

IDENTIFYING CHARACTERISTICS	
-Symmetrical or square massing -Hip or gable roof with dormers -Accentuated, centrally located entry door	
TYPICAL CHARACTERISTICS	
Roof Form	-Typical 5:12 to 6:12 roof pitch -12” to 18” eaves -6” to 12” rakes
Roof Materials	-40-year dimensional composition shingles
Entry Ways	-Pediment over porches -Transom over front door -Front porch with posts and beams
Windows	-Casement windows -Single hung windows -Symmetrical window placement on front elevations -Window shutters
Exterior Materials	-Clapboard siding -Brick and/or wood veneer -Stucco finish
Trim Detail	-Brackets under the eaves
Ornamentation	-Trusses or decorative shingles -Cornice

Representative Single Story Elevation

Symmetrical Massing

Pediment Over Porch

Transom Over Front Door

Dormers

Representative Two Story Elevation

Representative Single Story Elevation

Clay Pipe Vents

Stucco Finish, Strong Arches

Wrought Iron

"S" Tile Roofing

Representative Two Story Elevation

EARLY CALIFORNIA

IDENTIFYING CHARACTERISTICS	
-Asymmetrical massing -Hip roofs -Fully rounded arched elements -Use of wrought iron for accent	
TYPICAL CHARACTERISTICS	
Roof Form	-Typical 4:12 to 6:12 roof pitch -12" to 24" eaves -Tight to 12" rakes
Roof Materials	-40-year dimensional composition shingles -Barrel or "S" tile roofing
Entry Ways	-Front porches with pre-cast columns and wood beams -Strong arch elements
Windows	-Should have tall, narrow appearance -Grid or horizontal mullion patterns -Recessed primary window, minimum 12" recess
Exterior Materials	-Stucco exterior walls, light lace or smooth -Stone veneer
Trim Detail	-Corbels, beams, or rafter tail details
Ornamentation	-Plank shutters proportional to window opening -Decorative iron use on front facade -Front elevations feature decorative clay pipe vents or grid designs -Courtyard, turret, loggia, or balcony element (one of these)

MEDITERRANEAN REVIVAL

IDENTIFYING CHARACTERISTICS	
-Asymmetrical massing -Low pitched gable and occasional hip roof -Use of arch elements at doors or feature window	
TYPICAL CHARACTERISTICS	
Roof Form	-Typical 4:12 to 5:12 roof pitch -12” to 14” eaves -Tight to 12” rakes -Combination of hip and gable roofing with proportional overhangs
Roof Materials	-”S” tile roofing
Entry Ways	-Strong arch elements
Windows	-Recessed feature window -Windows should be grouped to achieve rhythm
Exterior Materials	-Stucco exterior walls, smooth to light sand finish -Stone and/or brick veneer
Trim Detail	-Stucco eave details, sand or smooth
Ornamentation	-Turret or tower element with separate roof -Decorative wrought iron railing or decorative grille work -Panel or plank shutters

Representative Two Story Elevation

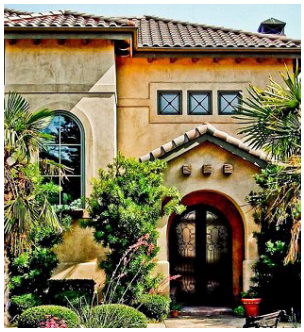

“S” Tile Roofing

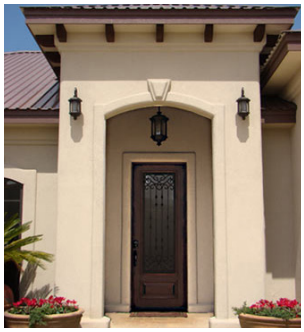

Tower Element

Strong Arch Elements

Decorative Wrought Iron

Representative Single Story Elevation

3.2.5 Residential Design Guidelines Checklist

This checklist is intended to be used as quick reference of the Residential Design Guidelines for designers, developers, builders, and City Staff.

SCALE	
Massing and Building Form	• No building wall shall extend more than 25' vertically or horizontally without a visual break created by a 2' minimum offset or architectural detail. • At least 25% of buildings within a subdivision shall have a building mass which combines single and two story forms.
Roof Forms, Materials, and Colors	• Create a diversity of roof forms for an articulated streetscape by providing at a minimum three different roof plans per building plan. • Flat roofs are not allowed. • Roof materials can include concrete or clay tile or architectural grade composition shingle.
ARCHITECTURAL STREETSCAPE	
Windows	• All windows shall have trim surrounds, headers, or sills. • Buildings with the same window locations, regardless of different elevation style, shall not be located next to each other.
Garages	• Within a neighborhood there shall be a minimum of three garage door designs provided to avoid monotony along the streetscape. Each garage door design shall be used in at least 25% of the neighborhood. • A maximum of two car garage bays shall front to the street. • Driveways shall have a maximum width of 18'.
Building Materials and Colors	• Materials and colors palette shall be comprised of three or more complementary options that cover a base color, trim color, and accent color. • Material and color blocking shall not terminate at outside corners of buildings and shall wrap to appropriate transition points.
Details	• Building details shall be consistent with the architectural style and overall building design.

VARIATION	
Plans and Elevations	• Refer to building plans and elevation requirements in the Residential Design section of The City of Tracy Design Goals and Standards. • Maximum of three houses of the same style may be located next to each other. • Elevations may be repeated on the same block or facing each other on the other side of the street only if they contain a different materials and color palette. • No two houses of the same elevation and floor plan shall be next to each other.
ARCHITECTURAL CHARACTER AND STYLES	
Styles	• All residential architecture in Tracy Hills shall exemplify the characteristics of one of the following architectural styles: Country European, Western Farmhouse, Victorian Revival, Craftsman Bungalow, Colonial, Early California, and Mediterranean Revival.

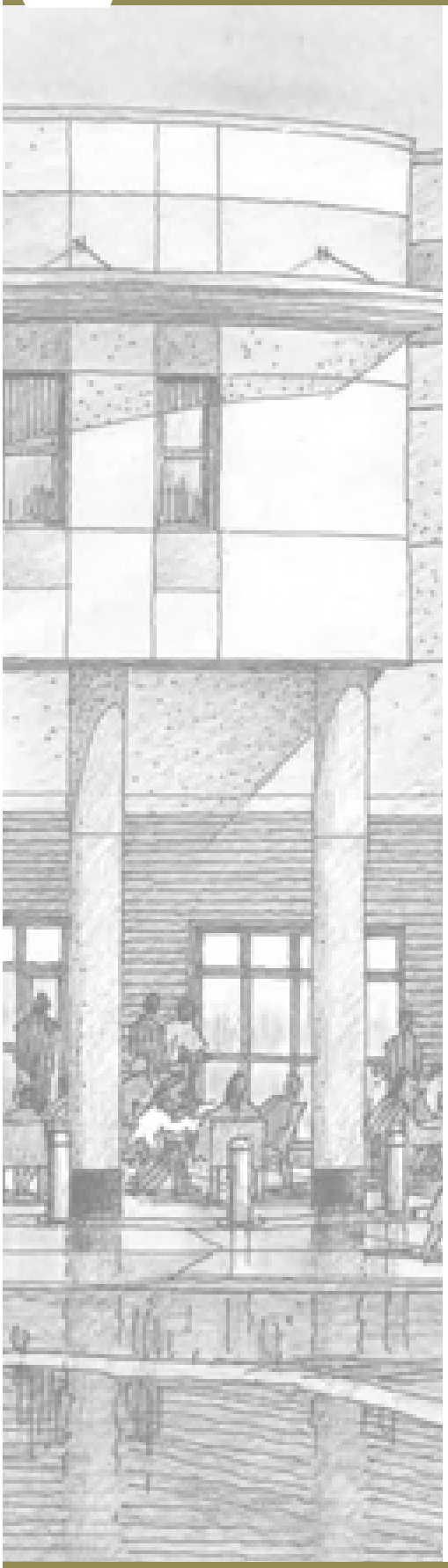

3.3 MIXED USE BUSINESS PARK ZONING DISTRICT DESIGN GUIDELINES

The Mixed Use Business Park (MUBP) Zoning District focuses on providing job generating and commercial opportunities to the City of Tracy. Permitted uses within the MUBP Zoning District include office, retail, limited industrial, and other commercial uses.

The following design guidelines build on the City's Design Goals and Standards for commercial and industrial buildings with the goal to create a Mixed Use Business Park with high quality architecture, walkable and pedestrian-friendly linkages, and development that is complementary to nearby residential neighborhoods.

All development within the Tracy Hills Specific Plan Area that is subject to Development Review shall be consistent with the City of Tracy Design Goals and Standards. In addition to those standards, development within the MUBP Zoning District shall be consistent with the design guidelines contained in this section.

At the end of these MUBP Zoning District Design Guidelines is a checklist for quick reference.

How to Use these Guidelines Effectively

1. *Conduct Document Review of the Following:*

- » Tracy Hills Specific Plan
- » Vesting Tentative Map
- » City of Tracy Design Goals and Standards

2. *Review these MUBP Zoning District Design Guidelines, which contain the following sections:*

- » Site Design: circulation and parking
- » Scale: building mass and form, and roof forms
- » Architectural Streetscape: building character, facade, entrances, screening, and utilities

3.3.1 Site Design

Building location, orientation, and parking layout in the MUBP Zoning District will have a large impact on the overall character and quality of experience of its users. The following guidelines aim to promote an accessible and pedestrian friendly Tracy Hills Mixed Use Business Park.

1. Pedestrian Circulation

- Clearly defined pedestrian pathways shall be provided between parking lots and building entrances.
- Multi-building complexes shall provide accessible pedestrian linkages for easy connectivity and walkability between building entrances and to public sidewalk(s).

Defined pedestrian pathways provide connections from the car to the buildings.

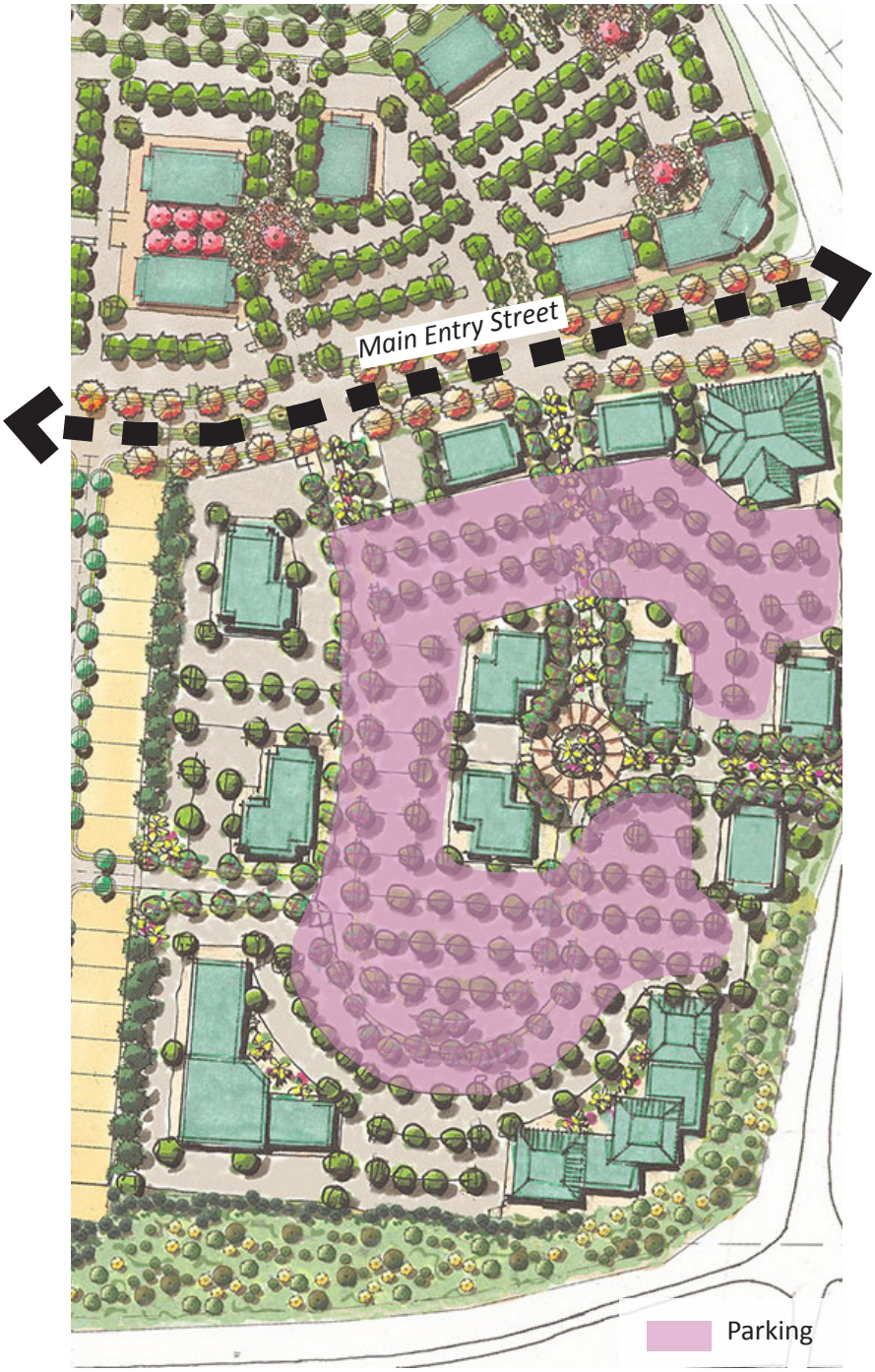

Parking lots that are located behind buildings create a welcoming and more pedestrian-oriented streetscape.

2. Vehicular Circulation and Parking

- Main vehicle entries and lot corners shall be framed by buildings to create a sense of arrival into the MUBP Zone District and provide for easier pedestrian connections from the buildings to the street.
- Parking lots are encouraged to be located behind buildings to de-emphasize the car and promote architecture forward buildings that help activate the streetscapes.
- Loading dock areas shall be screened with landscaping, berming, or screen walls when facing public streets or residential zones.

3.3.2 Scale

Scale refers to the massing and form of a building and includes elements such as building height and footprint. Depending on how a building is designed, it can either positively or negatively affect the character of a space and quality of the streetscape experience.

The guidelines below provide for the ability to create an organized Mixed Use Business Park environment that considers the visual interest and comfort of the space for its users.

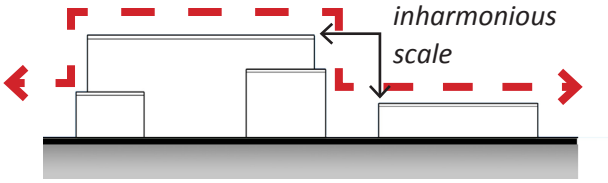

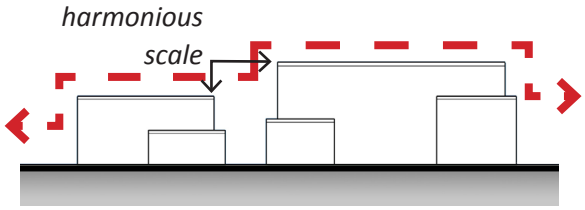

1. Building Mass and Form

- Building mass shall be appropriate to the site and its surroundings so that no building dominates and creates an inharmonious space.
- Building form shall allow for the creation of multiple usable zones that offer private and public spaces for Mixed Use Business Park tenants and guest users. These spaces include but are not limited to courtyards, plazas, and pocket gardens.
- Building proportions should be oriented toward the main public street or entry corners to articulate street interface.

Public space between buildings.

2. Roof Forms

- Roof forms shall be complementary to the building style.
- Roof parapets shall be varied and articulated to help provide interesting roofscapes.
- Flat roofed buildings shall include a minimum of two parapet heights.
- HVAC and other rooftop utilities and equipment shall be screened from public view.

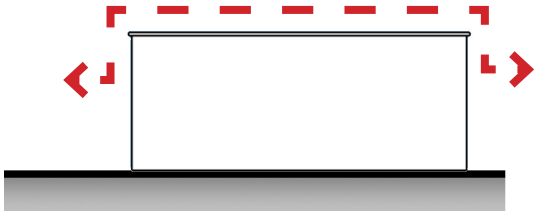

Flat roof line creates monotony and lacks visual interest.

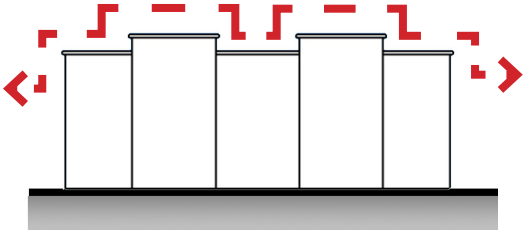

Roof line variation avoids monotony and creates visual interest and staggering planes.

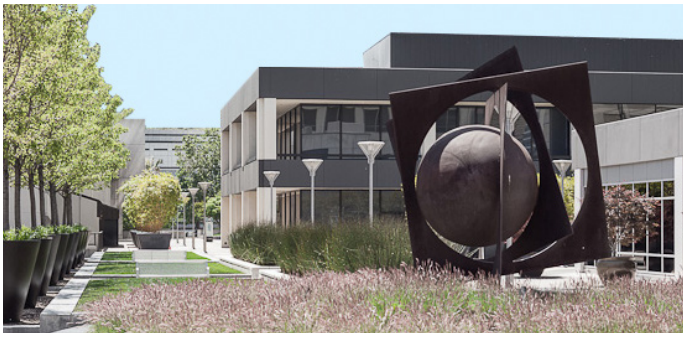

Attractive and functional Mixed Use Business Park entry.

Example of building addressing the public street and incorporating architectural details to create a visually interesting design.

3.3.3 Architectural Streetscape

The architectural character and design of the buildings in the MUBP Zoning District shall achieve high quality of architecture.

1. **Building Style**
   - Buildings within the MUBP Zone District shall be in context with the overall character of Tracy Hills. To this end, buildings in the MUBP Zone District shall draw on the roots of Americana architecture.
   - Americana architecture for buildings in the MUBP Zone District can be defined as more simplistic than Americana architecture for residential buildings.
   - Americana themes in buildings can be expressed through a variety of elements such as building materials, colors, and details.
   - Buildings located on the same site shall have consistent architectural detail and design elements to ensure a cohesive and strong identity.
2. **Building Facade**
   - Architectural details such as awnings, trellises, and canopies shall be incorporated to offer building articulation and visually interesting design.
   - Main building facades should be oriented in a way that creates optimal visibility from the main public street and freeway.

Building Facade Continued

- Break up large surfaces and add interest to a building with architectural detailing: cornices, reveals, awnings, score lines, colors, and shapes. These elements can be repeated in a fashion that creates an architectural rhythm that offers visual interest.
- All building sides shall be designed with a high level of detailing and quality of materials that are durable and graffiti resistant.
- Materials and colors palette should be comprised of three or more complementary options that cover a base, trim, and accent.
- Prefabricated metal or sheet metal sided buildings are not permitted.
- Building materials shall be appropriate to the architectural style of the building.

3. Entrances

- Building entrances shall be easily identifiable within the overall building design to give a clear visual cue for pedestrians seeking access.
- The primary entrance of the building shall provide protection from weather and may be articulated with a combination of architectural techniques such as projections, awnings, canopies, overhangs, and enhanced landscaping.

Example of breaking up a large surface with cornices and eaves.

Clear, protected pedestrian walkway to the front entrance.

Buildings should be broken up with colors, materials, and massing to avoid monotony.

An appropriately designed trash enclosure integrates with the overall design of the MUBP Zone District.

Example of screened utility boxes with landscaping.

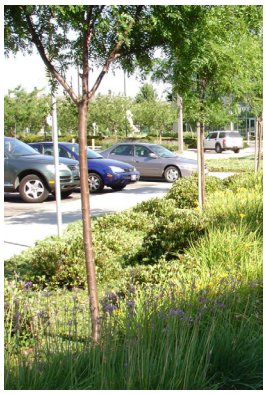

Landscaped buffers between parking and pedestrian walkways provide screening and visual interest.

Example of a wall de-emphasizing the visual impact of a parking lot.

4. Screening and Utilities

- Service doors, loading docks, and parking areas shall be screened by landscaping, and designed screening elements.
- Apply screen walls, fences, berming, and landscaping consistent with the MUBP Zone District's architecture to provide proper screening of utilities from public streets. This includes, but is not limited to: trash, service loading and storage areas, and at grade mechanical and/or electrical equipment such as gas and electric meters, backflow preventers, Fire Department connections, and post indicator valves.
- Trash enclosures shall be designed to complement the MUBP Zone District's overall architectural style.
- Enclosure walls and fence material shall be opaque to obstruct views of the waste management receptacles.
- Trash enclosures shall be a minimum of 7' in height to cover waste management receptacles.

3.3.4 Mixed Use Business Park Zoning District Design Guidelines Checklist

This checklist is intended to be used as quick reference of the Mixed Use Business Park Zoning District Design Guidelines for designers, developers, builders, and City Staff.

SITE DESIGN	
Pedestrian Circulation	• Multi-building complexes shall provide pedestrian linkages between buildings and to the public sidewalk(s).
Vehicular Circulation and Parking	• Main vehicle entries and lot corners shall be framed by buildings to create a sense of arrival. • Parking lots are encouraged to be located behind buildings.
SCALE	
Building Mass and Form	• Building form shall allow for the creation of multiple usable zones that offer private and public spaces. • Building proportions should be oriented towards the main public street or entry corners.
Roof Forms	• Roof forms shall be complementary to the building style. • HVAC and other rooftop utilities and equipment shall be screened from public view.
ARCHITECTURAL STREETSCAPE	
Style	• Buildings within the MUBP Zone District shall be designed to complement the Americana architectural character of the residential development of Tracy Hills.
Building Facade	• Facades shall incorporate visual interest and variety. • Main building facades should be oriented in a way that creates optimal visibility from the main public street and freeway. • All building sides shall be designed with a high level of detailing and quality of materials.
Entrances	• Building entries shall be easily identifiable.
Screening and Utilities	• Service doors, loading docks, and parking areas shall be screened by landscaping, or other appropriate design elements. • Trash enclosures shall be designed to complement the MUBP Zone District's overall architectural style. • Trash enclosures shall be a minimum of 7' in height to cover waste management receptacles.

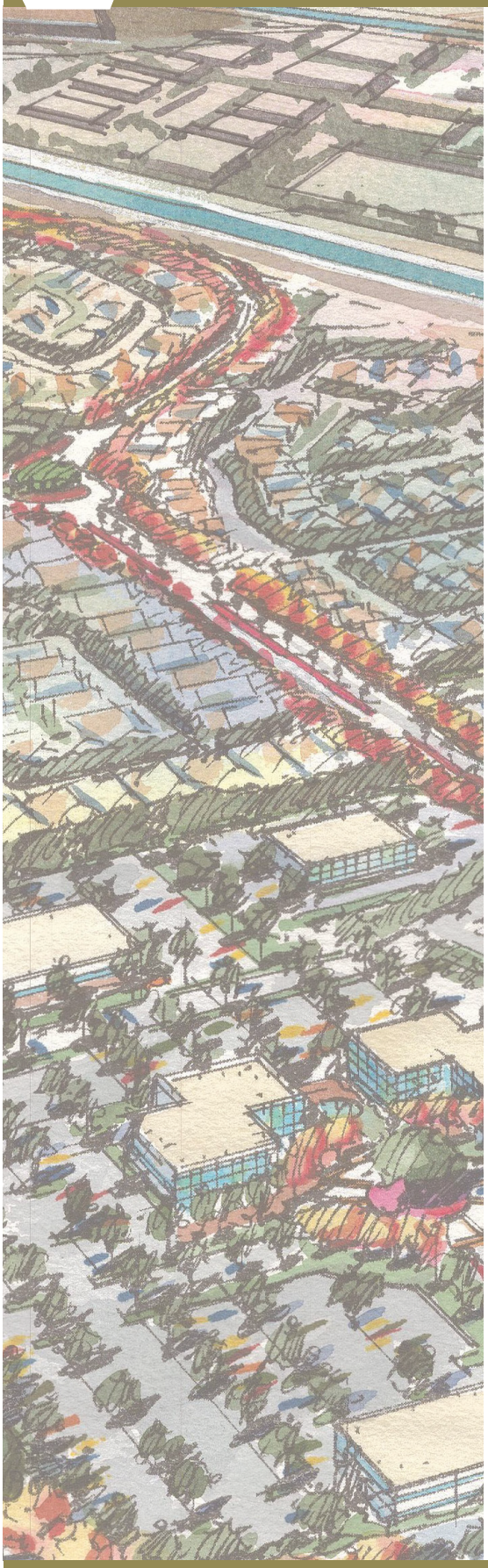

3.4 LANDSCAPE DESIGN GUIDELINES

3.4.1 Introduction

Landscaping plays an important role in establishing the visual identity and character of the Tracy Hills Community. Consistency in theme and the application of major community-level design elements, such as Community Monumentation, hardscape and master landscape, arterial street parkways, walls, fences and pilasters, edge conditions and plant materials, are designed to be maintained throughout the Tracy Hills community to communicate and enhance its identity.

These Landscape Design Guidelines are an aesthetically vital part of the Tracy Specific Plan. These guidelines are a guiding tool for the aesthetic development and aesthetic cohesiveness of Tracy Hills. These Landscape Guidelines shall apply Specific Plan-wide, however implementation details are only illustrated herein for Phase 1A. Therefore, prior to development of any non-agricultural use in areas other than Phase 1A, a Specific Plan Amendment shall be required, as specified in Chapter 2, Zoning and Development Standards, on page 2-1, and Section 5.1.7, Development Phases other than Phase 1A, on page 5-2.

These Landscape Design Guidelines contain the following sections:

- Community Theming and Character
- Landscape Guiding Principles
- Community Monumentation Identity Plan
- Community Monumentation
- Streetscape and Trails
- Edge conditions/Easements
- Conceptual Overall Illustrative Parks and Landscape Plan
- Lighting
- Furniture
- Walls and Fences
- Landscape Master Tree Plan
- Landscape Irrigation
- Utility and Equipment Screening

All public right-of-way landscaping and other improvements, such as monumentation, walls and fences, furniture and accessories, and lighting, shall be reviewed by the City through the Improvement Plans. All landscaping and other improvements which are located on private property shall be subject to Development Review, as specified in the Tracy Municipal Code.

- Landscape Plant Matrix
- Landscape Design Guidelines Checklist

3.4.2 Community Theming and Character

Tracy Hills is a planned community that captures and enhances the unique character of the City of Tracy. The project offers its residents an environment where pedestrian circulation, recreational activity, and social interaction is encouraged. The residential neighborhoods within Tracy Hills focus on these aspects by providing generous landscaped setbacks, street-oriented residences, widened pathways and trails, public gathering areas, and several parks with recreational amenities.

1. Thematic Elements

- In general, thematic elements are major project improvements that occur at the community or neighborhood level, and assist in establishing the overall design theme for the Tracy Hills community.
- Major thematic components of the HOA maintained areas will be reinforced within the following:
  - » Monumentation
  - » Streetscape Landscape
  - » Enhanced Hardscape, such as concrete pavers to be used in a 10' wide strip around the roundabouts
  - » Community Edge Conditions
  - » Public Park/HOA Parks and Trails
  - » Lighting/Street Furniture
  - » Walls and Fences
  - » Landscaping/Plant Palette
- Thematic elements will commonly occur throughout the community and will unite Tracy Hills under a common design vocabulary.
- General design guidelines and design criteria for thematic elements are contained in the following sections.

Conceptual Community Icon proposed to be located at off-ramp on I-580 to the project

Stone and Woodwork applications that can be used throughout the community. Stone and Woodwork are proposed in the parks and the Business Park.

Gabion Wall structure and stone form proposed for the central theming of the community and can be used throughout the community. Gabion base wall structures are currently proposed on the Community Monumentation structures.

Masonry and focal element feature that can be designed within the community at parks and Welcome Home Center.

Several identifying design and landscape elements will be incorporated throughout the community at parks, passive open space areas, neighborhood entries, the Welcome Home Center, and commercial areas, and will generally include:

- Timeless stone and corten steel for monumentation, wayfinding, and accessory structures.
- Natural landscaped areas blended with manicured landscaping.
- Low water, drought tolerant and native tree and shrub materials, such as California Sycamores and Oaks.
- Natural materials such as stone and wood.
- Varied paving materials, including stone, concrete, wood, decomposed granite, and concrete pavers.

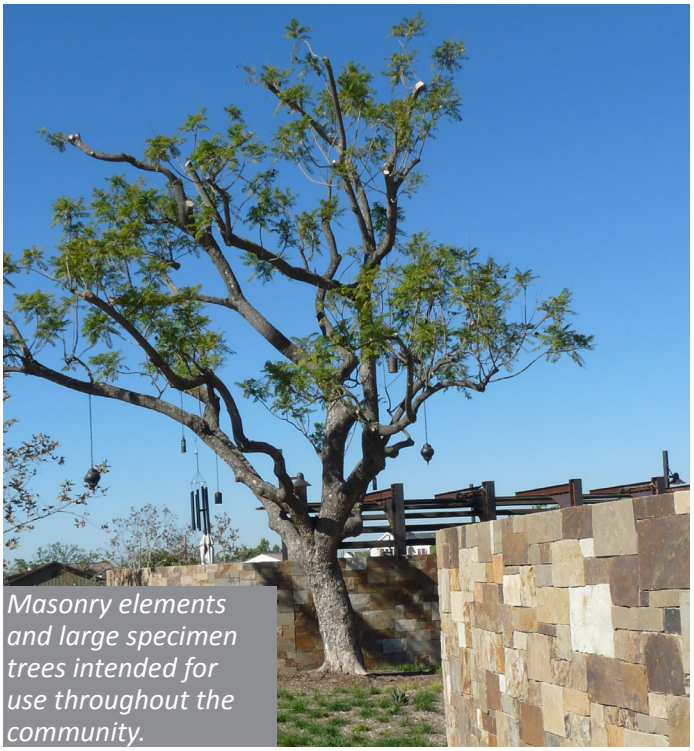

Masonry elements and large specimen trees intended for use throughout the community.

Park structures depicting the design intent for the community.

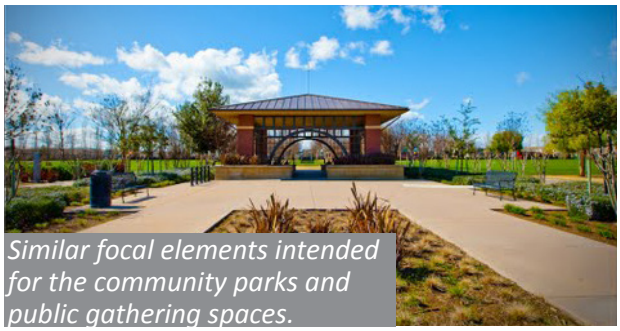

Similar focal elements intended for the community parks and public gathering spaces.

3.4.3 Landscape Guiding Principles

Through thoughtful, sensitive design, each of the residential, commercial, and industrial areas can be designed to conserve valuable resources and create a noteworthy community within the City of Tracy. Landscape Architects are encouraged to research alternative sustainable possibilities and incorporate them into the model home and common area landscape design. The following is a list of various 'sustainable' features to be used and/or considered for the Tracy Hills Development at the improvement plan phase/ level.

- Incorporate a state of the art water management system that allows groundwater to recharge.
- Encourage the use of low toxic wood preservatives (no CCA), or naturally rot-resistant wood for landscaping.
- Choose low water, drought tolerant, and/or native plants that match the micro climate, and soil conditions.
- Select plants that are "non-invasive" according to the current California Invasive Plant Inventory, published by the California Invasive Plant Council.
- Design landscape and plant spacing to allow for plants to reach mature size. Using appropriate sizes and the thoughtful placing of plants prevents overgrowth and future thinning, reducing the amount of material sent to the landfill.
- Locate plants to ensure proper drainage and to reduce potential damage to buildings.
- Reuse soils from the site, if appropriate, as horticultural soils.
- Maintain and/or improve soil health through responsible management including nurturing soil with organic matter, reducing synthetic fertilizer use, and restoration to sustain protected and future ecosystems.
- Use integrated pest management to control or eliminate pesticide and toxic chemical use.
- Increase tree cover to provide shade in developed areas to reduce energy demand, mitigate solar heat gain into buildings, and to reduce the amount of heat absorbed by paved areas.

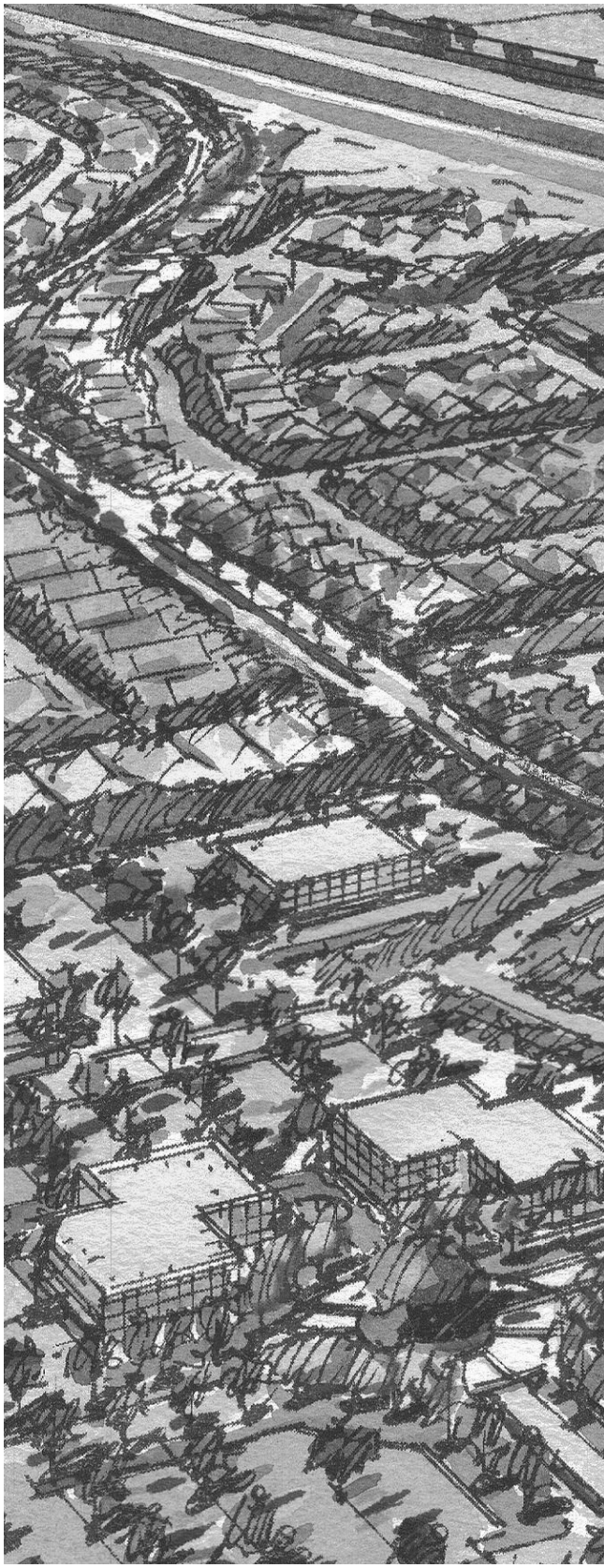

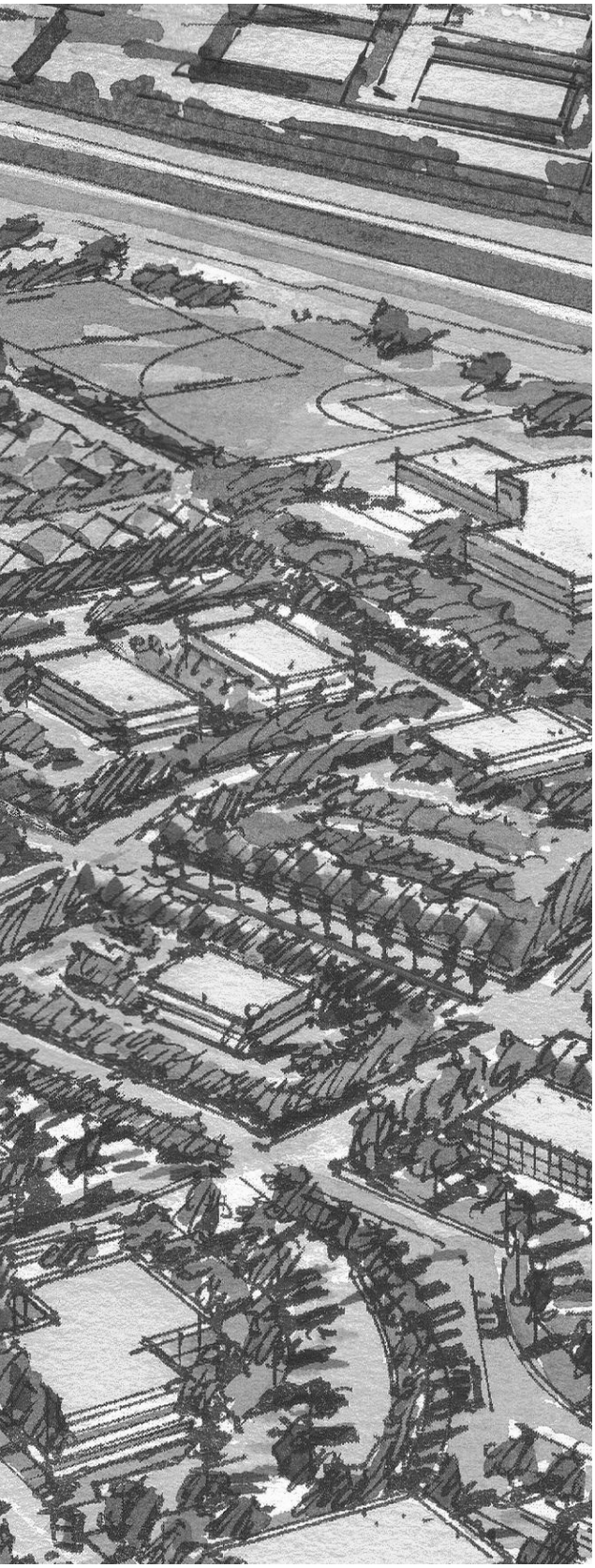

- Plant deciduous trees on the south side of buildings to allow for increased solar heat gain in winter months (thereby reducing energy needed for heating interiors) and shading in summer months (thereby reducing energy needed for cooling interiors).
- Minimize the use of large turf areas (except within parks) or inefficient small turf areas (those under 10'-0" in width) in landscaping by incorporating water-conserving groundcovers or perennial grasses, shrubs, and trees.
- Utilize weather and climate-smart irrigation controllers.
- Design irrigation zones to suit plant requirements and incorporate high-efficiency nozzles.
- Use sustainable materials in landscape construction and site furnishing selections including, but not limited to, recycled materials, permeable paving, environmentally preferable/ responsible products, materials that can be recycled, certified "green" products, and locally available or locally manufactured products.

Example of sustainable landscape palette materials within drainage swales

Example of sustainable landscape plant material

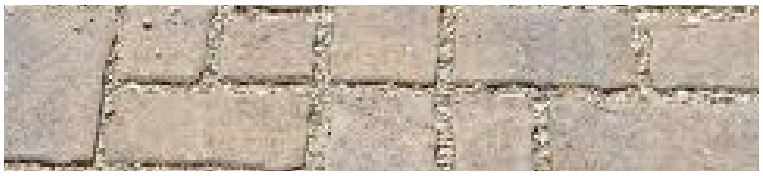

Example of permeable paving

3.4.4 Community Monumentation Identity Plan

Appropriate thematic identification is important in establishing a new community and maintaining the overall Tracy Hills theme, as well as providing a system for identifying community development and giving directional information to residents and visitors. A Community Identity Signage/Monumentation Key Map is provided below, Figure 3-1.

Community monumentation, through signage with decorative typefaces and symbolic graphics, will inform the visitor that they are entering a planned community. Monumentation will direct visitors who have entered Tracy Hills towards the distinct community components and amenities. Monumentation will be consistent with the character of the project, but flexible enough to respond to individual project contexts. Logos, type styles, color schemes, and architectural features should be consistent throughout the area being identified. Monumentation may vary in size and detail in a manner that reflects their relative importance within the signage hierarchy, but will incorporate all the materials proposed within the monumentation.

Symbol	Description/Location
	Community Gateway Icon - Develop a vertical icon to create a unifying community identity and statement of community commitment and quality that is visible from the I-580.
	Primary Community Monumentation - Identifies overall community of Tracy Hills for current and future phases
	Secondary Community Monumentation - Identifies residential community entrance on a vertical architecture wall/monument
	Primary Neighborhood Monumentation- Identifies entries of the neighborhoods off main arterial roads
	Park Monumentation- Simlar to Neighborhood Entries but at a smaller scale and identfies main park entry.
	Trailhead Marker- Signage at a smaller scale to blend into surroundings. It identifies location of a trail access where it conncets to a roadway.

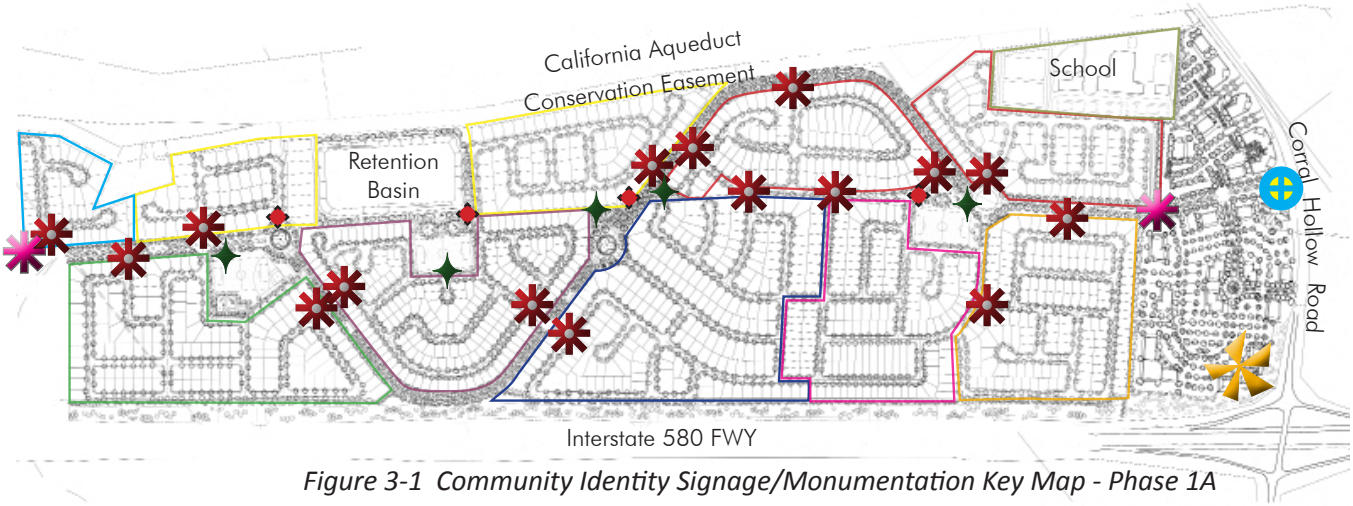

Figure 3-1 Community Identity Signage/Monumentation Key Map - Phase 1A

**These are 'proposed' locations and will be modified based on actual builder entries and necessity for entry identification. A detail plan for each phase shall be reviewed and approved by the City of Tracy prior to installation of any signs. Monument design and application will be consistent with monument design and location shown herein for Phase 1A.*

Corten steel example of material only

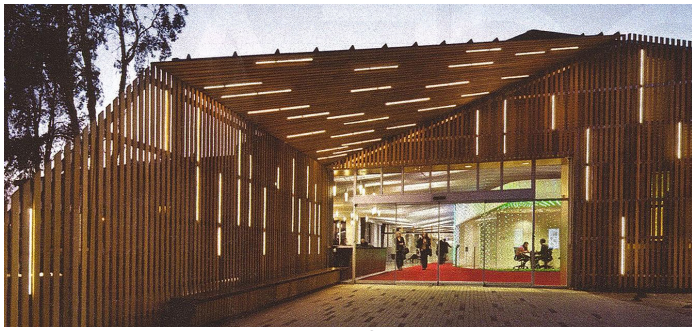

Modern architecture example for community buildings such as the 'modern barn' Welcome Home community building referenced herein

Modern Barn conceptual image

Gabion Wall showing stone form and rebar structure (optional) for base of proposed monumentation and other vertical hardscape community elements

The photos herein represent the proposed materials and general design intent of the Community Monumentation.

- All community monumentation to be consistent with these proposed designs and materials.
- Corten Steel Panels - metal allowed to rust to create a self-protective coating, laser-cut or water-cut lettering.
- Gabion Wall - Dry Stacked Stone, with optional metal mesh cage and steel rebar structure, metal to allow to rust.
- Community Icon - possible Windmill - wood, steel, painted.
- Logo within the corten steel - water/laser-cut corten steel or accent painted steel.
- Drystack Ledgestone Panel Standard within the optional rebar steel cage for the base of all monumentation.

Corten Steel example of material and panel inset on monumentation.

Drystack Ledgestone Panel Standard- Mocha Mesa, proposed stone for Monumentation (or equal). Example of monumentation base material.

3.4.5 Community Monumentation

All public right-of-way landscaping and other improvements, such as monumentation, walls and fences, furniture and accessories, and lighting, shall be reviewed by the City through the Improvement Plans.

All landscaping and other improvements which are located on private property shall be subject to Development Review, as specified in the Tracy Municipal Code.

1. Community Gateway Icon

The Community Gateway Icon will be the landmark of the new community and establish a unifying community identity while providing a strong statement of community, commitment, and quality. A potential idea is proposed for a modern barn-like building coupled with an updated windmill sculpture that will comprise the Community Gateway Icon, conveying the agricultural heritage of the project site and serve as a "Welcome Home" center. Following use by the developer for marketing purposes, this building can serve as a potential neighborhood market and mail center for the community, or be used for any other community use that is permitted by this Specific Plan. The Community Gateway Icon shall be privately maintained. The Community Gateway Icon shall be subject to Development Review approval by City Council, as specified in Section 5.1.2 of this Tracy Hills Specific Plan.

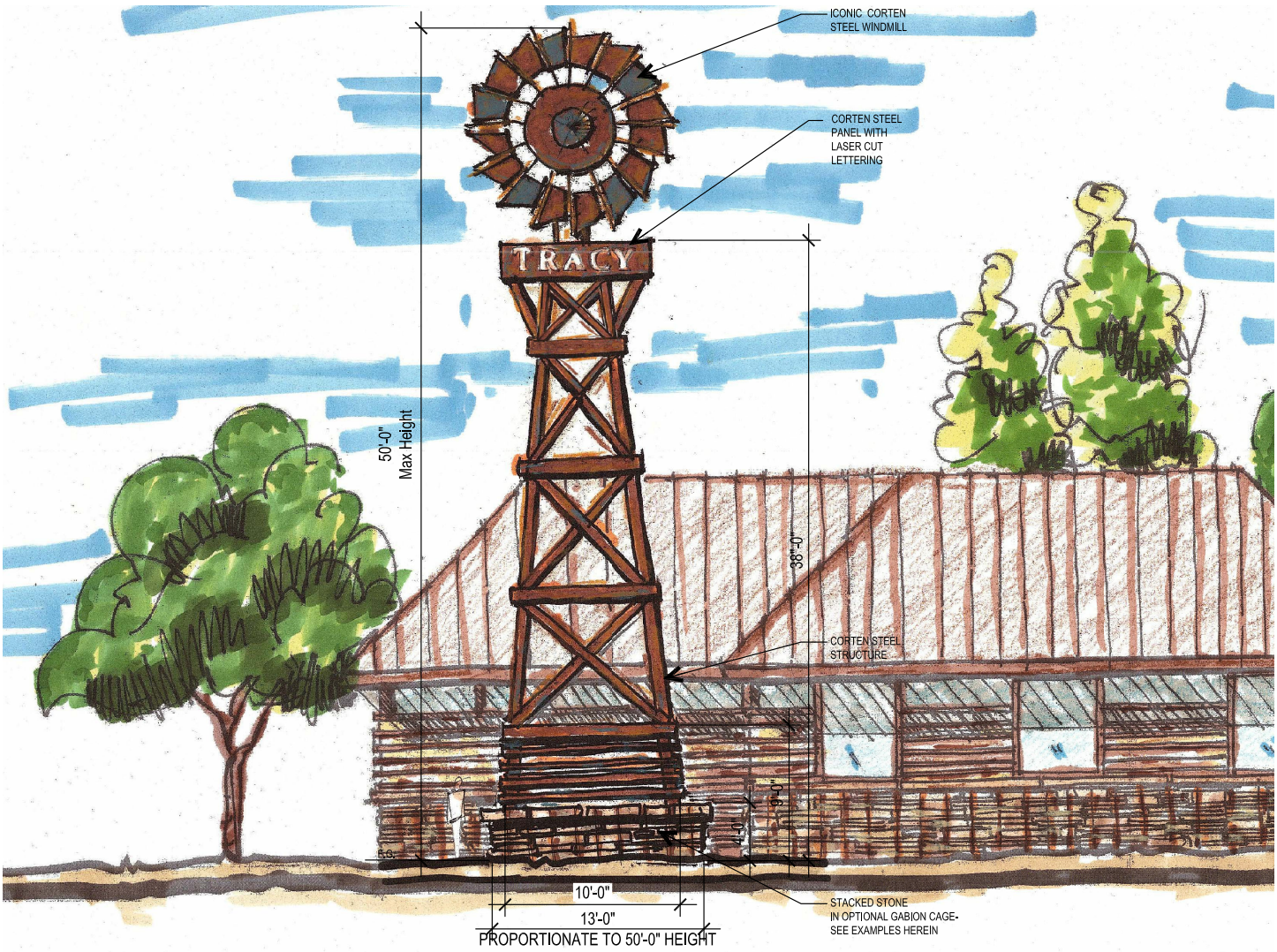

**Conceptual Windmill design provided for thematic purposes. Dimensions provided for proportion scale only.*

2. Primary Community Monumentation

Primary Community Monumentation will be located at the main entrance to the Tracy Hills development, at the community access point off of Corral Hollow Road. These signs will be the largest of the community monumentation and will incorporate natural stone wall elements with corten steel laser-cut/water-cut accent panels. The Tracy Hills Community name is proposed to resemble corten steel raised lettering. (Font style per Branding Consultant.) The Primary Community Monumentation will be anchored with three specimen Oak trees nestled amongst low-water shrubs and grasses.

Primary Community Monumentation

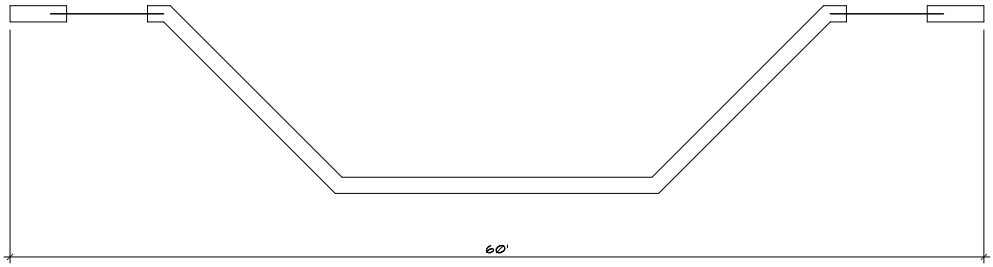

Primary Community Monumentation - Plan View

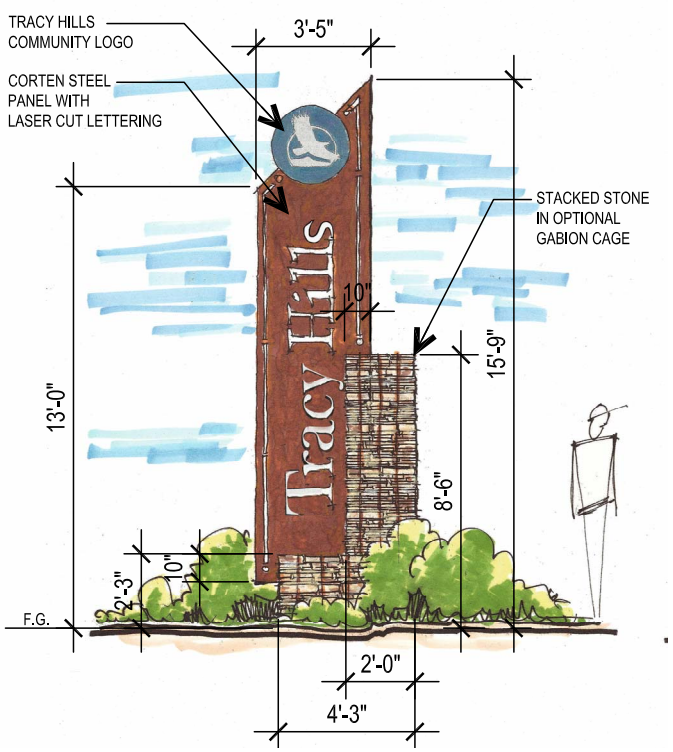

3. Secondary Community Monumentation

Secondary Community Monumentation will be located on the main Spine Road announcing the entry to the residential community of the Tracy Hills development. These signs will be the most vertical of the community monumentation and will incorporate a large vertical corten steel laser-cut/water-cut panel with a stone base that can opt to add a gabion mesh over the natural stone. The Tracy Hills Community Logo will be incorporated into the corten steel, and medium to low-growing shrub material will soften the base.

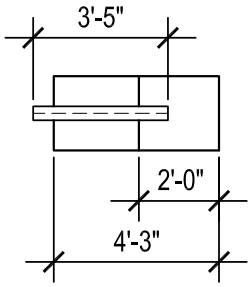

SECONDARY COMMUNITY MONUMENTATION

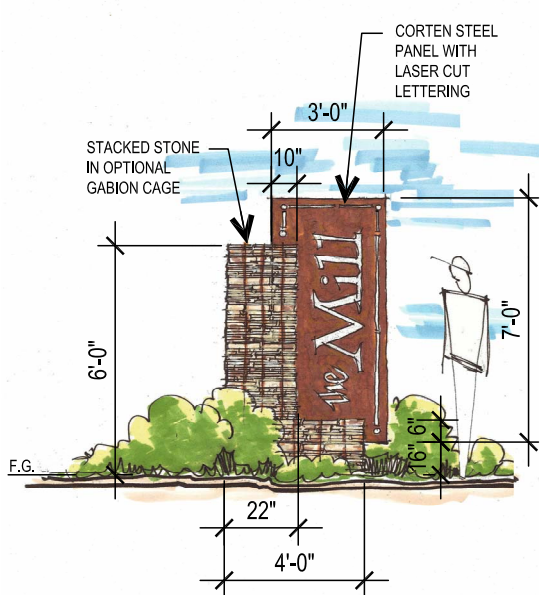

4. Primary Neighborhood Monumentation

Primary Neighborhood Monumentation will be used to identify the various residential neighborhood entry points within the Tracy Hills community. The entry monumentation incorporates the design elements of the natural stone walls with optional gabion mesh over the natural stone, corten steel panel with laser-cut/water-cut typeface and the Tracy Hills Community Logo, surrounded by medium to low-growing shrub material.

*("The Mill" is not an actual name but a conceptual placeholder for builder neighborhood names.)

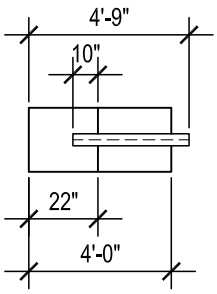

PRIMARY NEIGHBORHOOD MONUMENTATION
PLAN VIEW

Community Monumentation and Primary Neighborhood Monumentation shall be located outside of City sightline setbacks.

5. Park Monumentation

Park Monumentation will identify park and recreation spaces throughout the Tracy Hills development. The design of the monumentation is similar to the Primary Neighborhood Monumentation, but will be constructed at a smaller scale. A laser-cut/water-cut corten steel panel with the park name and the Tracy Hills Community Logo nestled into a natural stone wall with optional gabion mesh over natural stone will identify the park spaces. Park monumentation will be located where most visible and always a minimum of 5’-0” from back of walkway and hardscape. Park monumentation at City-owned Public Parks will incorporate the City of Tracy logo. Park monumentation at HOA-owned Private Parks will incorporate the Tracy Hills Community logo.

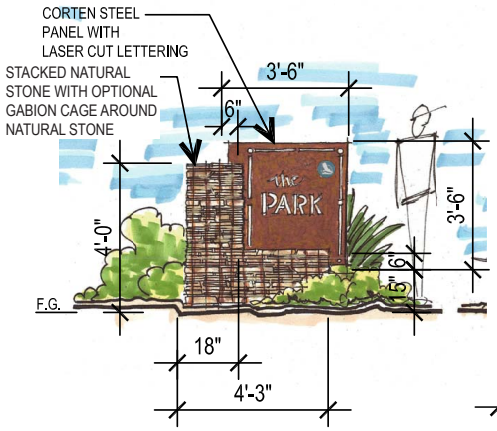

Private Park Monumentation

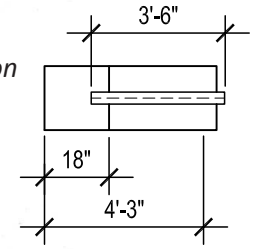

PARK MONUMENTATION
PLAN VIEW

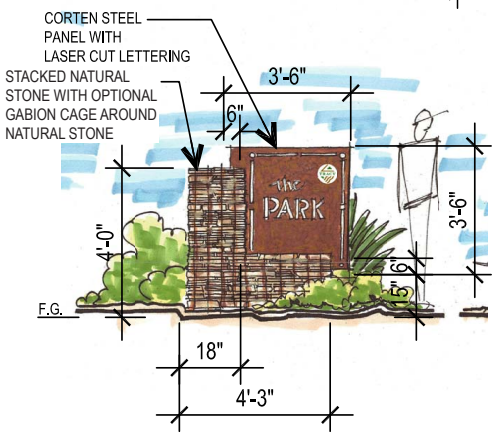

Public Park Monumentation

6. Trailhead Marker

Trailhead Markers are located at points where a trail connects to a roadway or intersection. These wayfinding indicators have accent design elements that match the community monumentation and are nestled within a boulder grouping. The Trailhead Markers are a simpler design at a smaller scale. They are compatible with their surroundings and aesthetically pleasing. Trailhead markers will be located at key trailhead areas for directional purposes and located a minimum of 3’-0” from any hardscape/walkways.

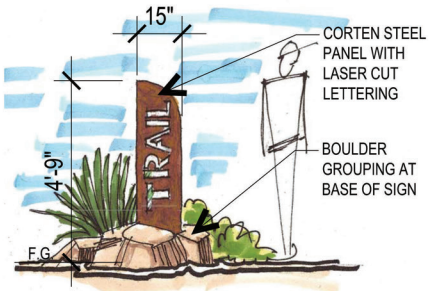

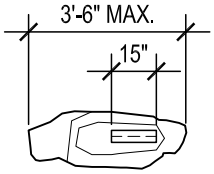

TRAILHEAD MARKER
PLAN VIEW

7. Font/Branding/Details for Community Monumentation

The details conceptually illustrate how each of the materials can be applied and connected to create a seamless transition from one element to another. Community logo, typeface, and font style are conceptual only.

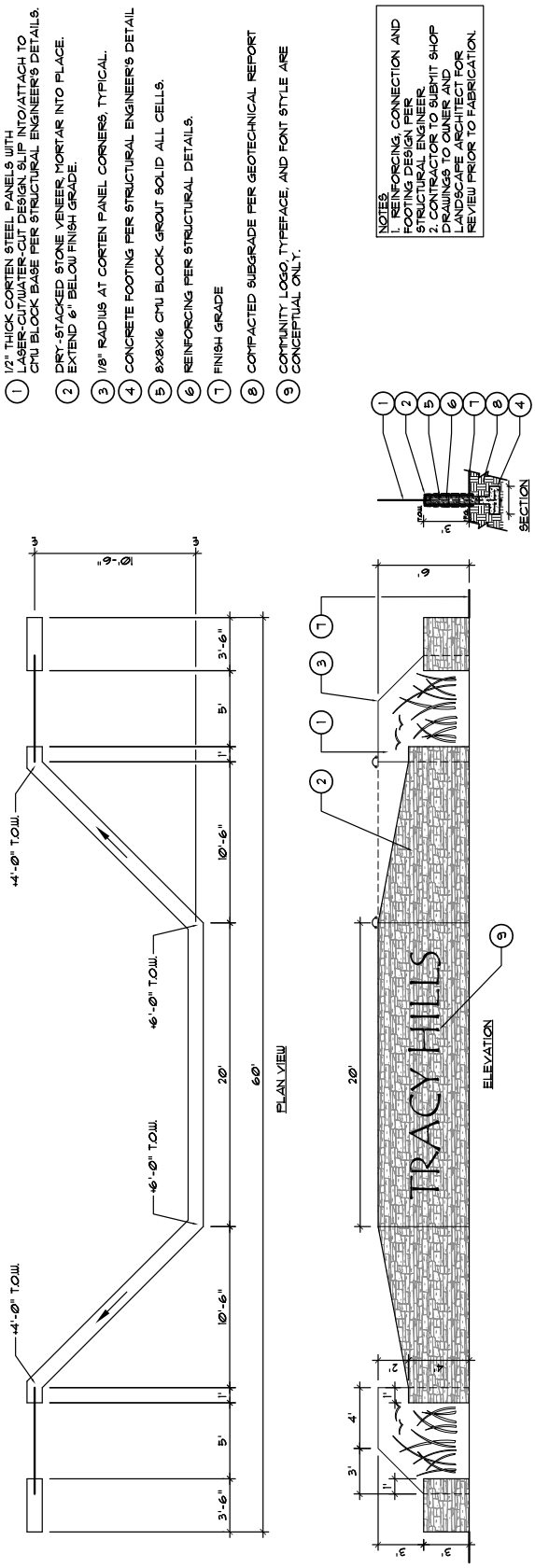

Figure 3-2a Primary Community Monumentation

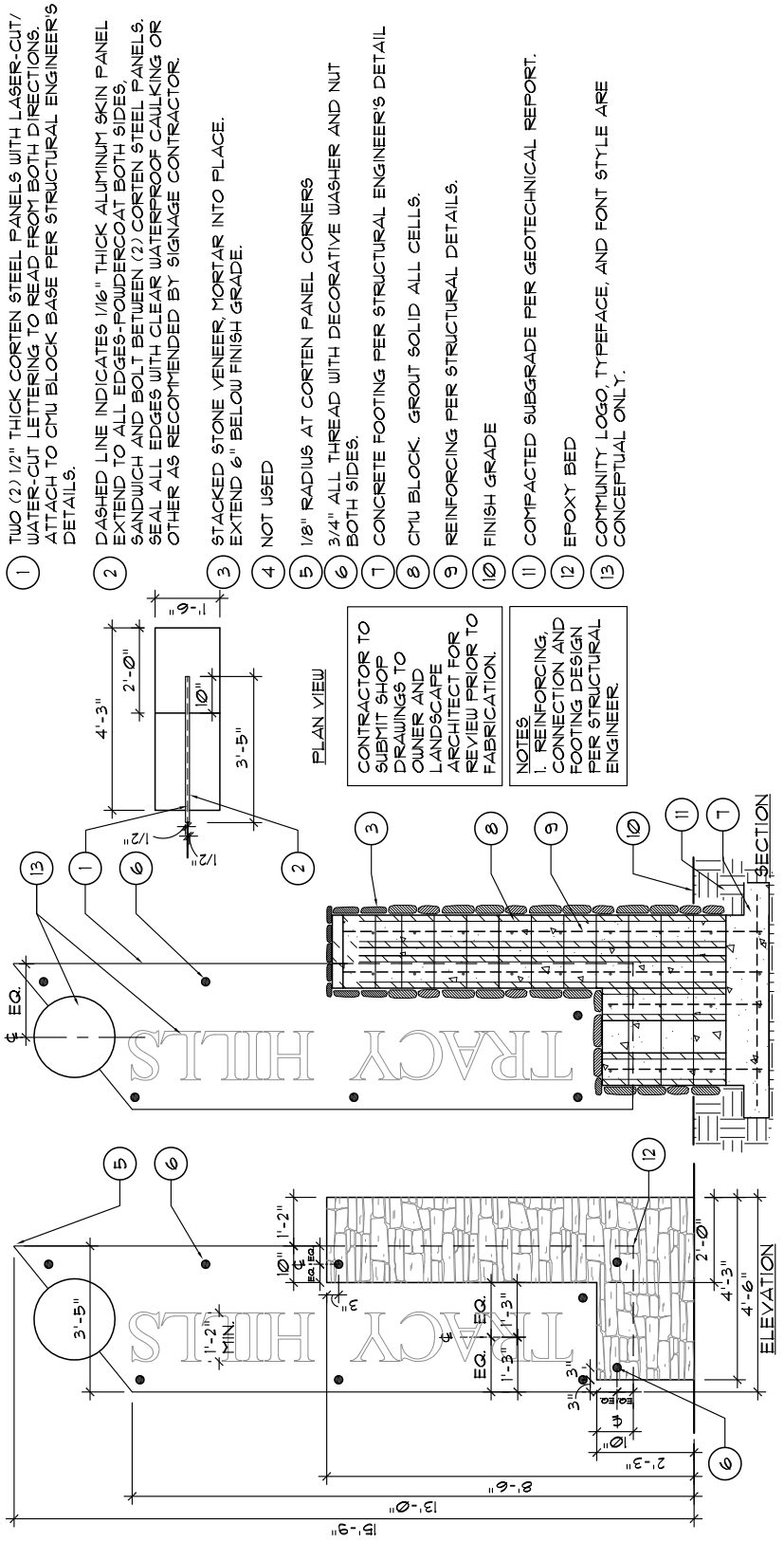

Figure 3-2b Secondary Community Monumentation

NOTE: Construction specifications/ detailing herein are subject to change based on structural calculations.

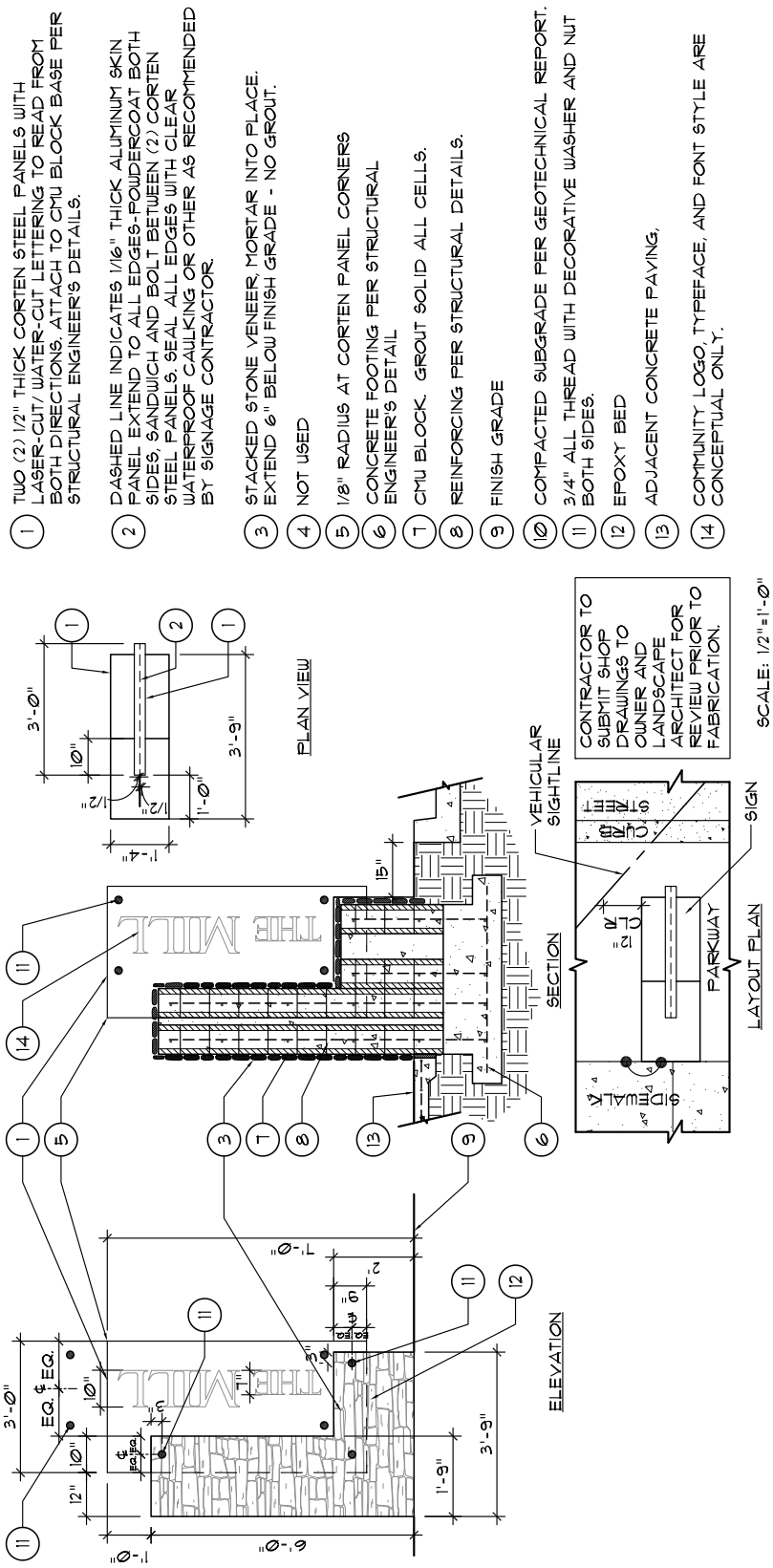

Figure 3-3 Primary Neighborhood Monumentation

NOTE: Construction specifications/ detailing herein are subject to change based on structural calculatinos.

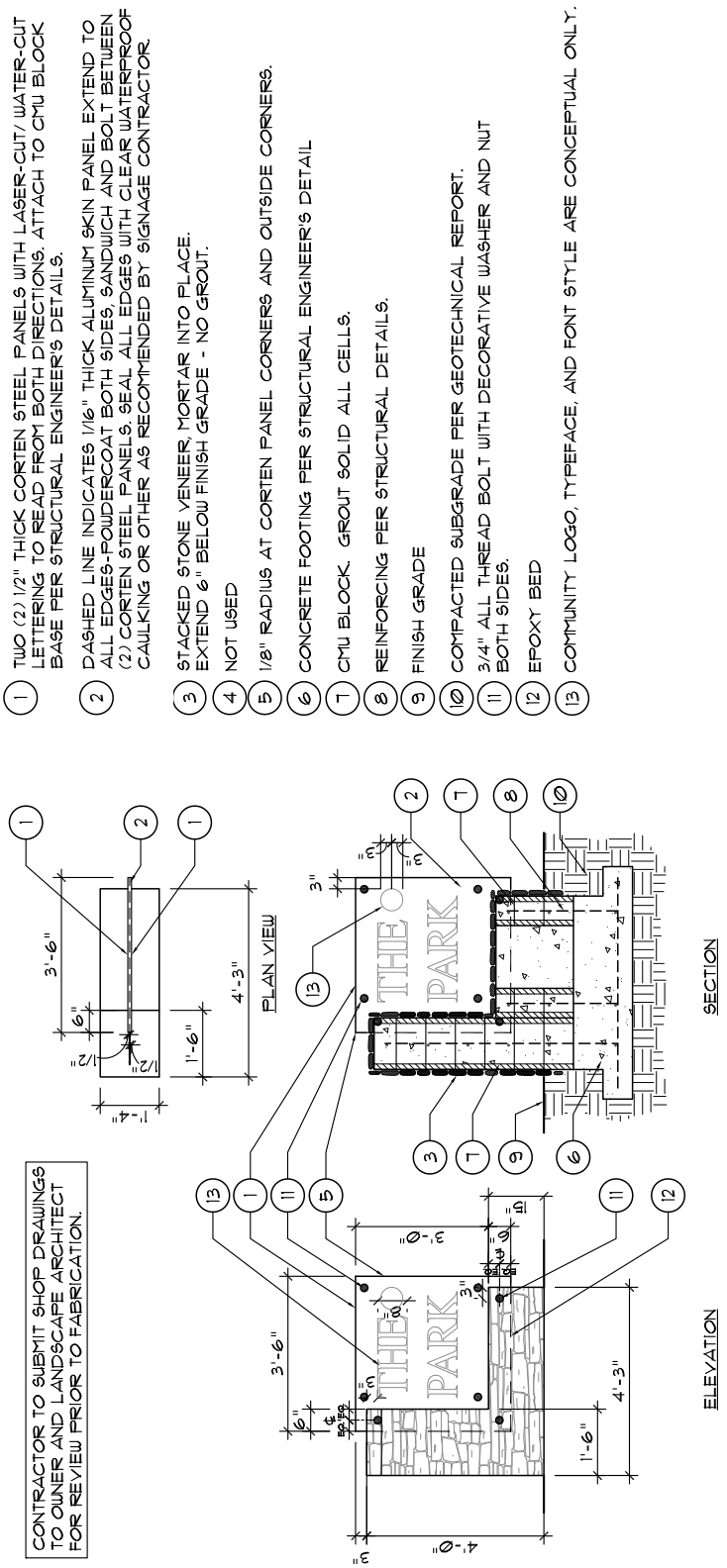

Figure 3-4 Park Monumentation

NOTE: Construction specifications/ detailing herein are subject to change based on structural calculatinos.

CONTRACTOR TO SUBMIT SHOP DRAWINGS TO OWNER AND LANDSCAPE ARCHITECT FOR REVIEW PRIOR TO FABRICATION.

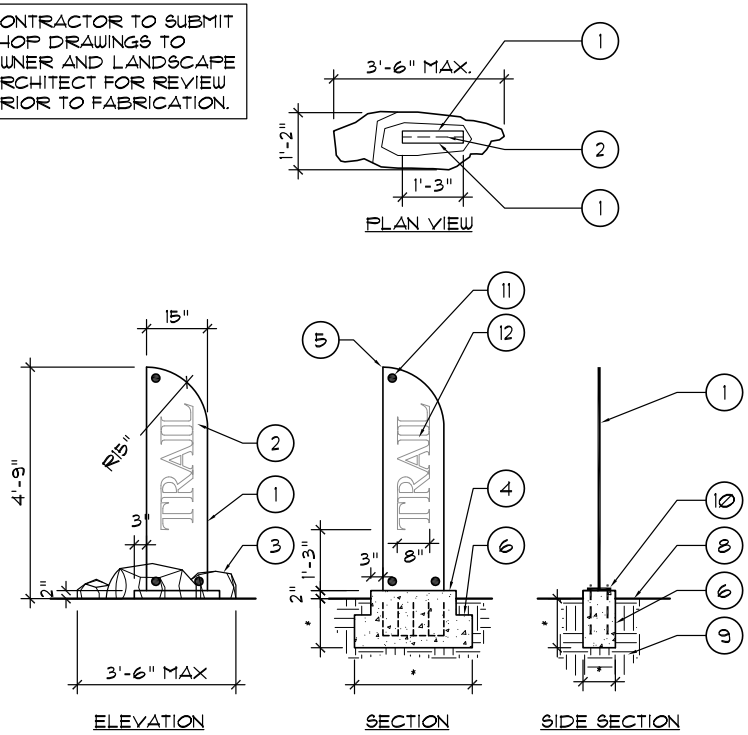

1. TWO (2) 1/2" THICK CORTEN STEEL PANELS WITH LASER-CUT/ WATER-CUT LETTERING TO READ FROM BOTH DIRECTIONS. ATTACH TO CMU BLOCK B, PER STRUCTURAL ENGINEER'S DETAILS.
2. DASHED LINE INDICATES 1/16" THICK ALUMINUM SKIN PANEL EXTEND TO ALL EDGES-POWDERCOAT BOTH SIDES, SANDWICH AND BOLT BETWEEN (2) CORTEN STEEL PANELS. SEAL ALL EDGES WITH CLEAR WATERPROOF CAULKING OR OTHER AS RECOMMENDED BY SIGNAGE CONTRACTOR.
3. BOULDER GROUPING AT BASE OF SIGN. PLACE BOULDERS ON ALL SIDES TO COVER BASE.
4. POURED-IN-PLACE CONCRETE CURB WITH 1/2" RADIUS EASED EDGES.
5. 1/8" RADIUS AT CORTEN PANEL CORNERS AND OUTSIDE EDGES.
6. CONCRETE FOOTING PER STRUCTURAL ENGINEER'S DETAIL
7. REINFORCING PER STRUCTURAL DETAILS.
8. FINISH GRADE
9. COMPACTED SUBGRADE PER GEOTECHNICAL REPORT.
10. CORTEN MOUNTING PLATE TO MATCH SIGN PANEL. WELD TO SIGN PANEL. MOUNT TO CONCRETE CURB PER STRUCTURAL ENGINEER'S DETAILS.
11. 3/4" ALL THREAD BOLT WITH DECORATIVE WASHER AND NUT BOTH SIDES.
12. COMMUNITY LOGO, TYPEFACE, AND FONT STYLE ARE CONCEPTUAL ONLY.

Figure 3-5 Trailhead Marker

NOTE: Construction specifications/ detailing herein are subject to change based on structural calculatinos.

3.4.6 Streetscape and Trails

Several streetscapes applications are proposed within the Tracy Hills development, as shown within this section, Streetscape and Trails. As illustrated in the following exhibits, a hierarchy of streetscapes is provided and distinctive landscape treatments are planned for each roadway. Landscape and hardscape treatments include elements such as landscaped medians, sidewalks, enhanced paving (painted crossings and stamped asphalt) at pedestrian crossings and primary/secondary entries, bike trails, and parkway trees with evergreen backdrops to enhance roadways. Enhanced paving used herein is defined as any paving other than natural gray concrete or asphaltic concrete. The use of enhanced paving is strongly encouraged. Streetscapes and Trails are provided as shown in the following pages (Figures 3-6 to 3-14.) These street sections are depicting landscape applications for each section. Refer to Section 4 for engineered street sections.

Conceptual image for Multi-use/Bike Trail

Conceptual Spine Road Streetscape image

Conceptual Class I Bike Trail

Note: Renderings assume full growth vegetation to illustrate design intent

Figure 3-6 Streetscape and Trails Key Map - Phase 1A

Legend

Section	Symbol	Description/Location
1		Class 1 Bikeway
2, 2b		10' Multi-Use Pedestrain/Class 1 Bikeway on both sides (Spine Road)
3		16.5' Pipeline Easement/Passive Trail
4, 4b		Internal Residential Streets

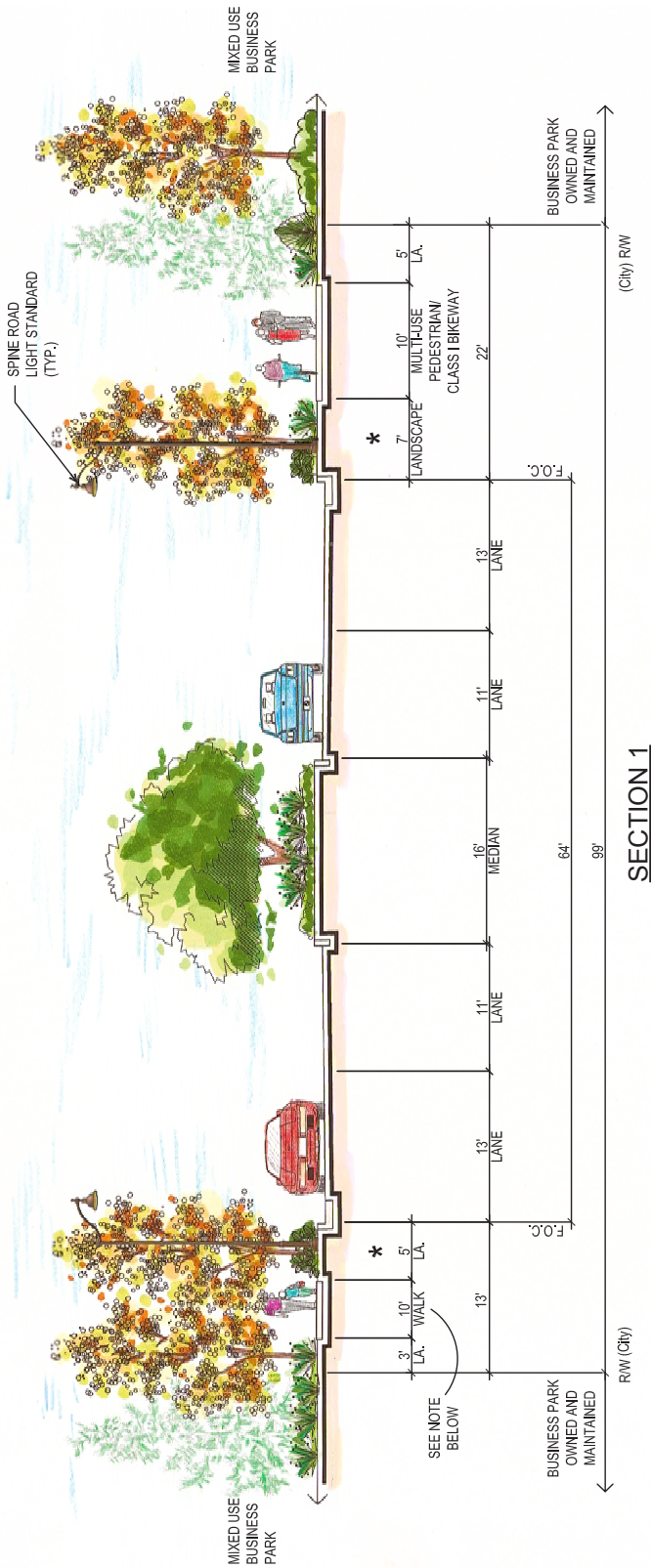

Figure 3-7 FOUR LANE MAJOR ARTERIAL WITH MEDIAN (99' R/W)

Note: Sidewalk is 5'-0" where adjacent to 16.5' Pipeline Easement.

** Tree species in narrow parkways will be carefully specified, allowing for proper root growth and details for mulch circles will be specified to allow for mowing.*

The main Spine Road will feature such landscape elements as monumentation, street furniture, and a predominant plant palette consisting of Oak Tree focal elements, Sycamore trees and vertical tree backdrops (appropriate species to be used, taking into account the width of the landscape area behind the sidewalk).

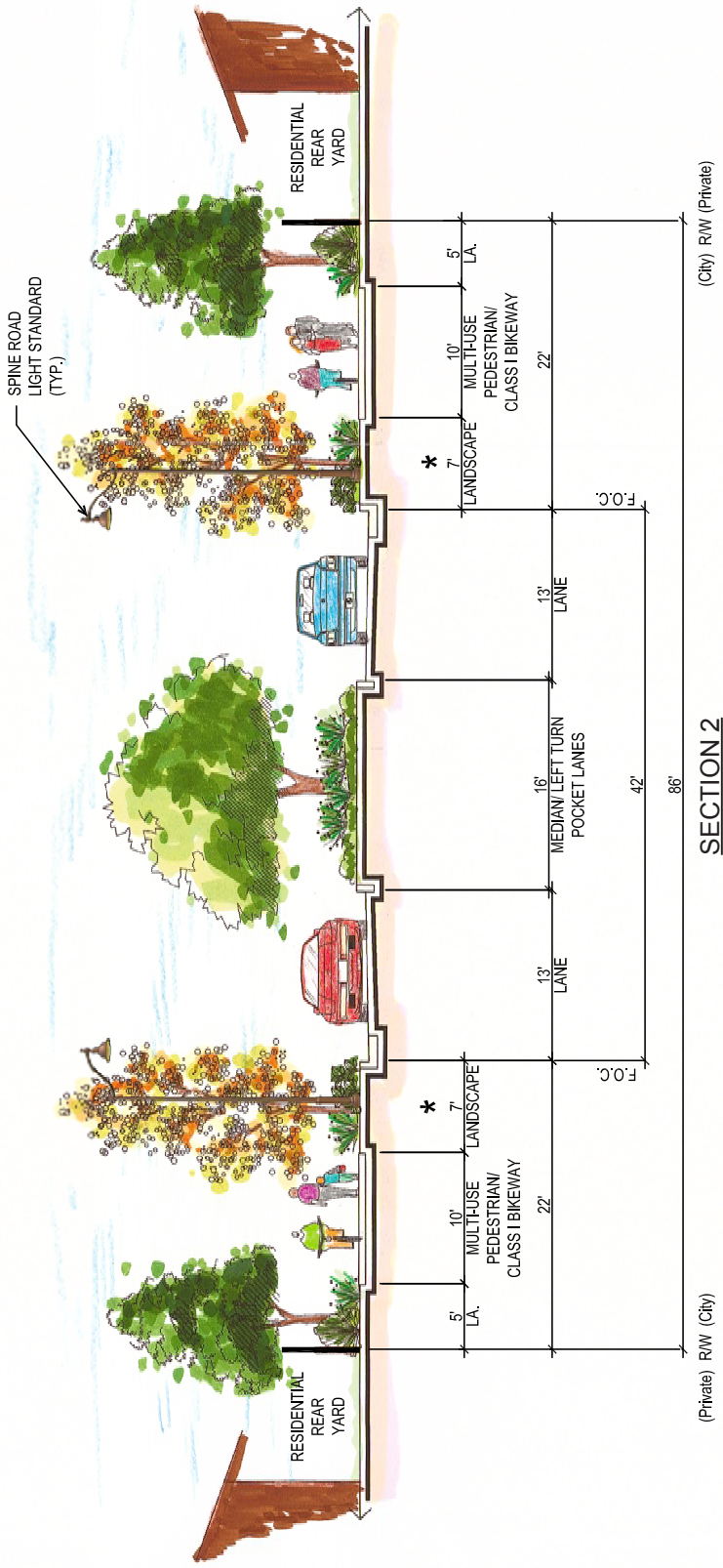

Figure 3-8 SPINE ROAD (86' R/W)

** Tree species in narrow parkways will be carefully specified, allowing for proper root growth and details for mulch circles will be specified to allow for mowing.*

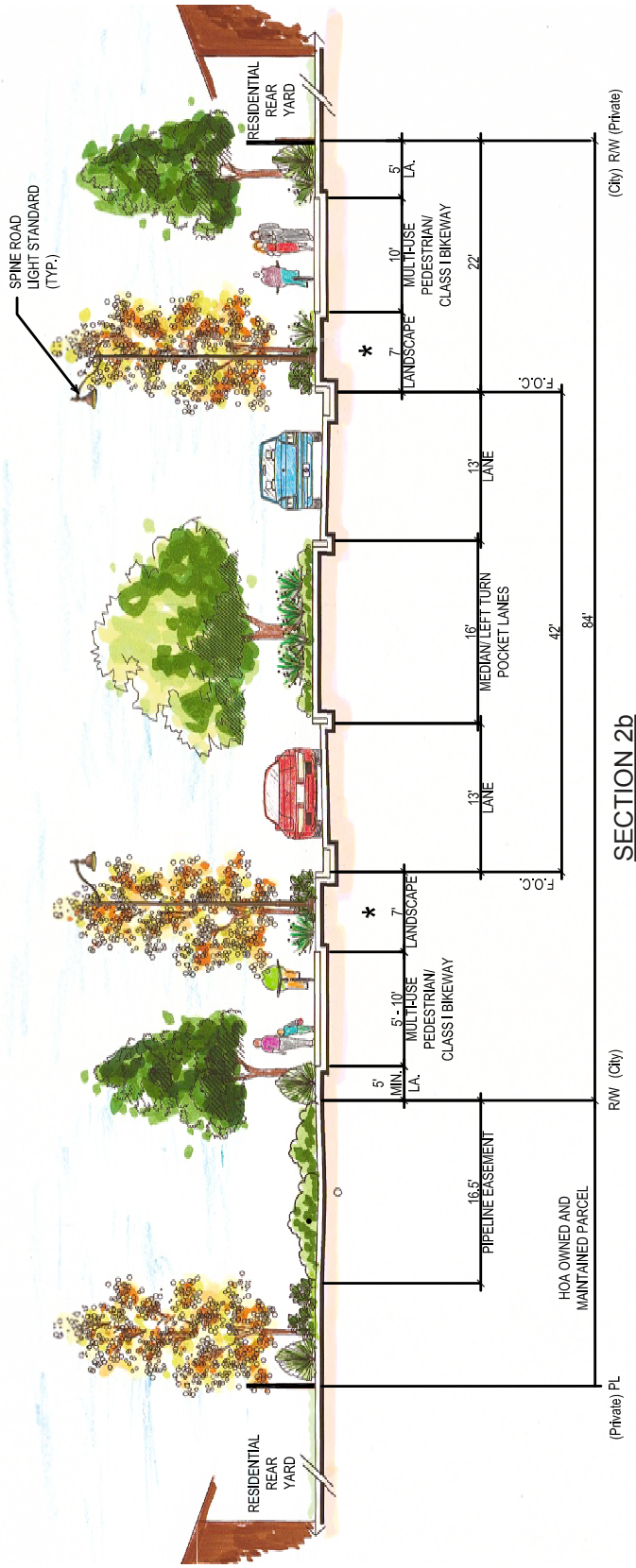

SECTION 2b

Figure 3-9 SPINE ROAD AND 16.5 ' PIPELINE EASEMENT

** Tree species in narrow parkways will be carefully specified, allowing for proper root growth and details for mulch circles will be specified to allow for mowing.*

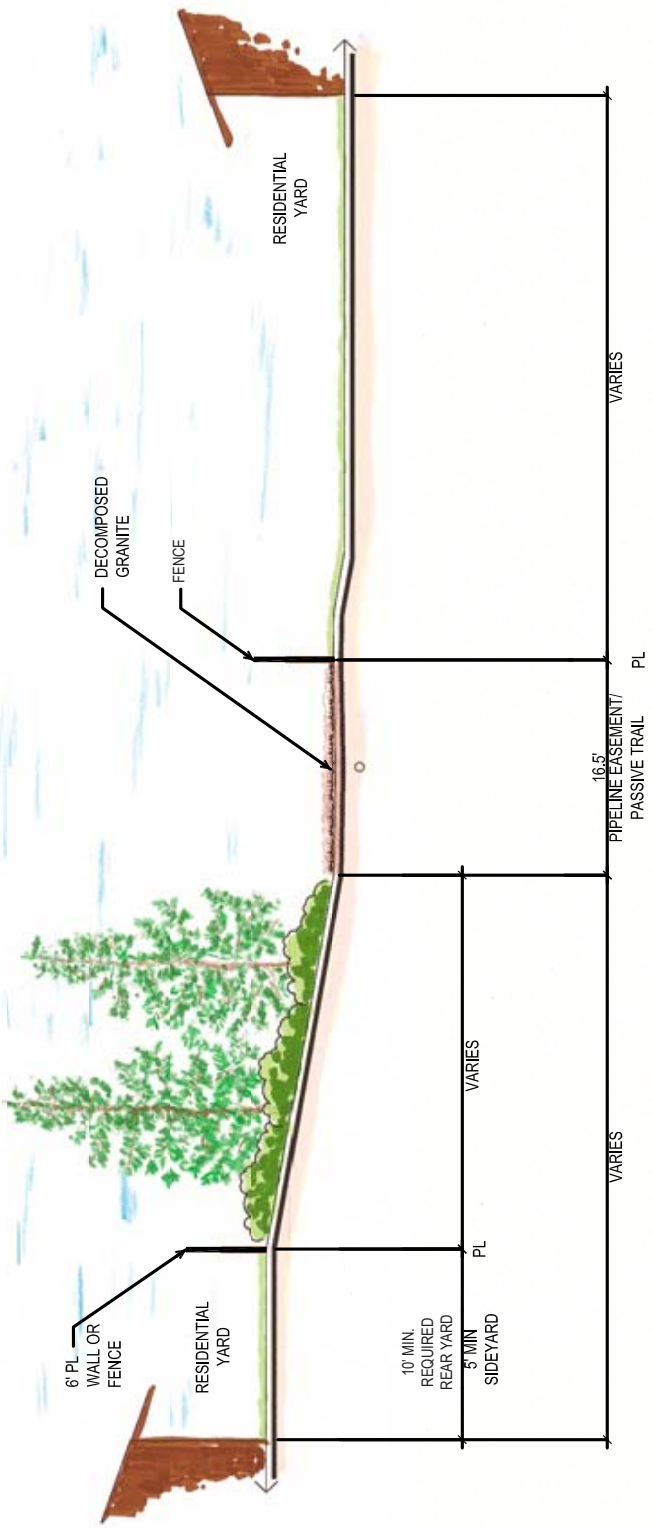

SECTION 3

Figure 3-10 PIPELINE EASEMENT WITH RESIDENTIAL ON BOTH SIDES

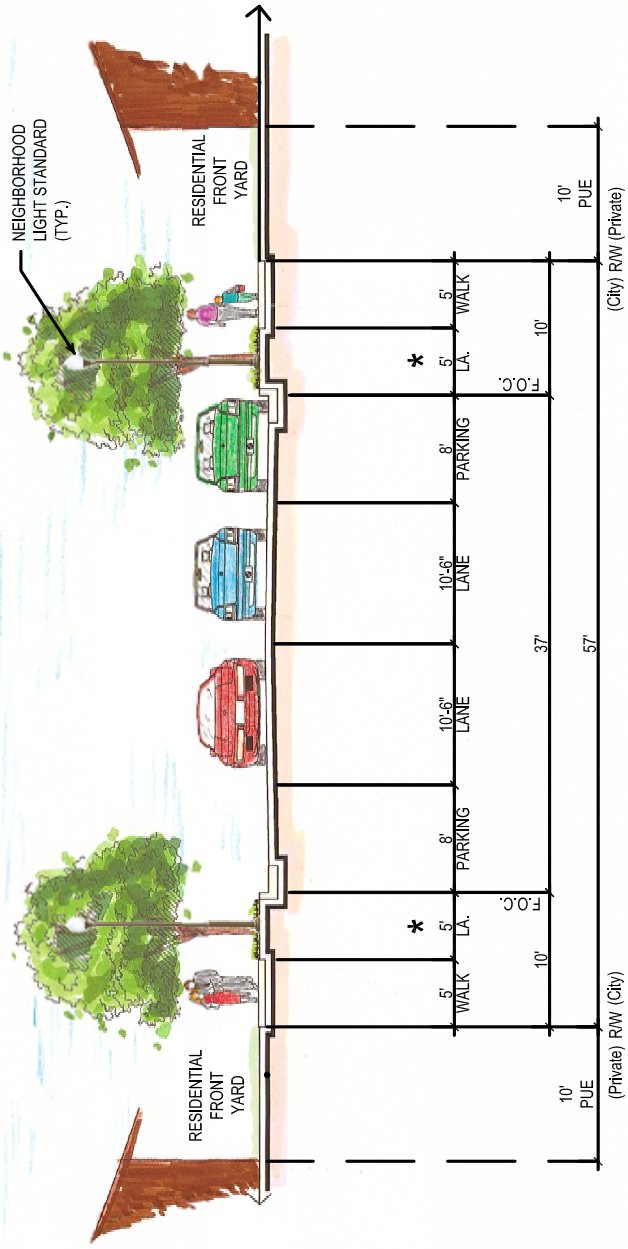

SECTION 4
RESIDENTIAL STREET (57' R/W)

Figure 3-11

** Tree species in narrow parkways will be carefully specified, allowing for proper root growth and details for mulch circles will be specified to allow for mowing.*

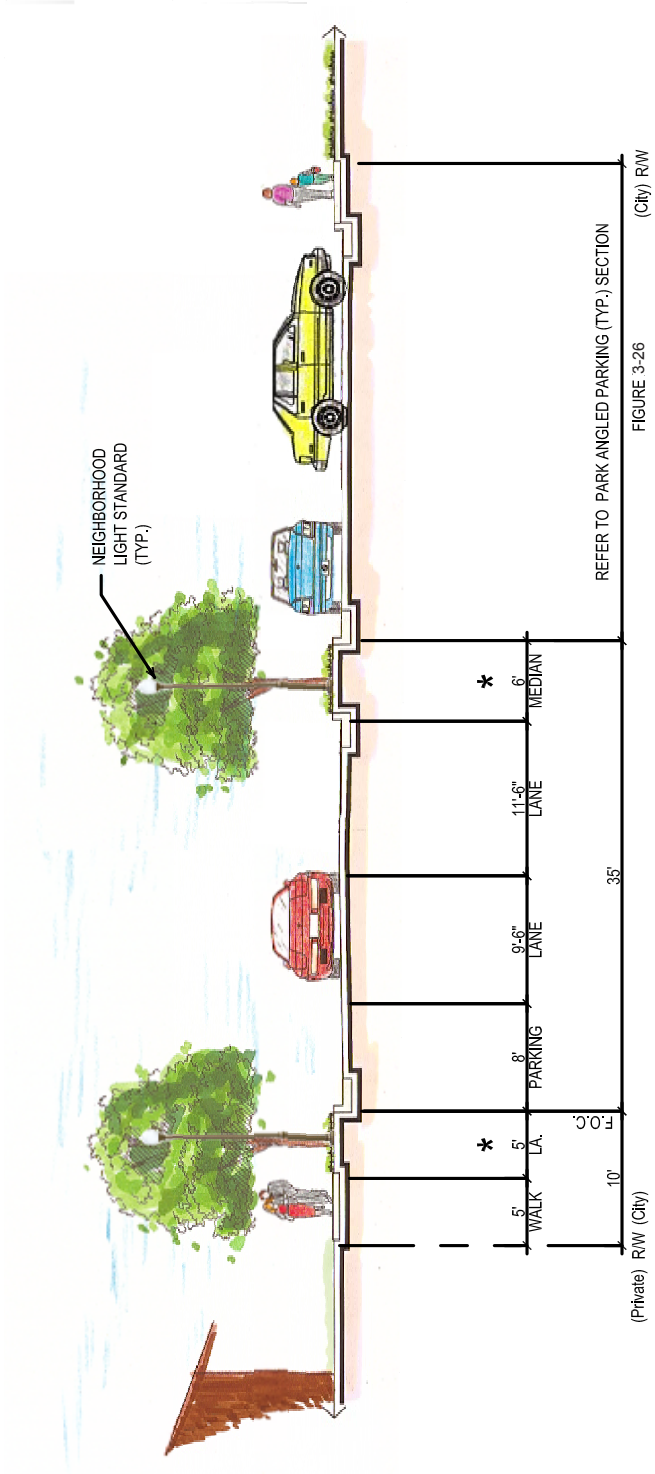

SECTION 4b

Figure 3-12 RESIDENTIAL STREET ADJACENT TO PARK

** Tree species in narrow parkways will be carefully specified, allowing for proper root growth and details for mulch circles will be specified to allow for mowing.*

3.4.7 Edge Conditions/Easements

One hundred foot wide conservation easements are recorded within the Specific Plan along most of both sides of I-580 and the south side of the California Aqueduct, totaling approximately 120 acres. These easements were dedicated to San Joaquin Council of Governments in 2012. The purpose of these conservations easements is to provide permanent wildlife habitat. These conservation easements will be owned and maintained by the project's HOA and zoned Tracy Hills Conservation (C-TH). No development within these areas will be allowed except for installation of landscape materials, irrigation, and protective fencing. Signs will be attached to the fencing advising the public to "stay out of the conservation easement areas."

1. Conservation Easement - Interstate 580

Residential development will interface with the I-580 conservation easement and a landscape buffer zone. An 8' high sound wall is planned at portions of the residential development boundary for sound attenuation from the nearby Interstate 580 Freeway. (Refer to Wall and Fence Section 3.4.11, for identification of those specific locations). The sound wall will be screened from the Interstate by groupings of evergreen and deciduous trees. The buffer zone between the sound wall and the conservation easement will include a 10' wide maintenance access road, a drainage swale, and landscape area. A 5'-0" high, easement barrier fence on the property line in between the conservation easement and the Tracy Hills development is proposed. The fence will act as a barrier between the conservation easement and the buffer zone with the intent to keep wildlife out of the community, keep larger domestic animals from entering the conservation easement and will serve as a barrier to people in the interest of public safety and integrity of the easement for wildlife.

2. Conservation Easement - California Aqueduct

The California Aqueduct Conservation Easement will have the existing native landscape "protected-in-place" and no additional landscape or irrigation improvements are proposed.

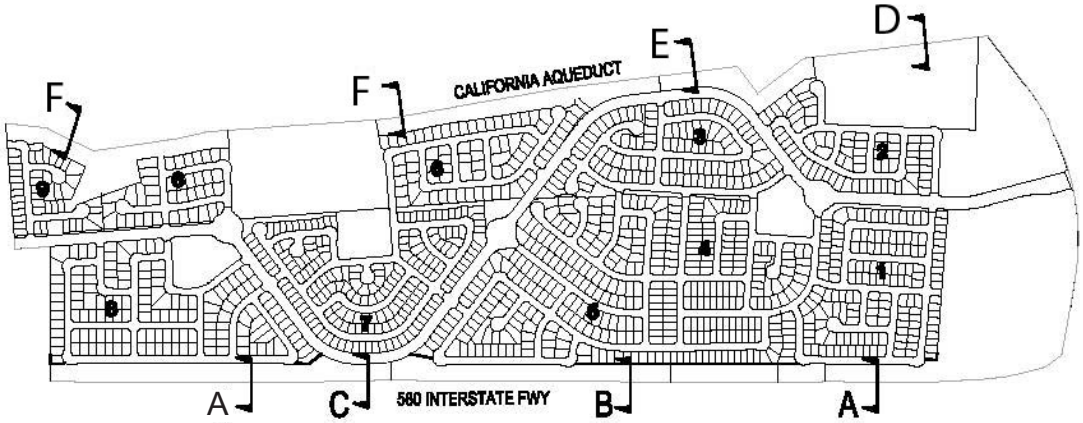

Figure 3-13 Edge Conditions/Easements Key Map

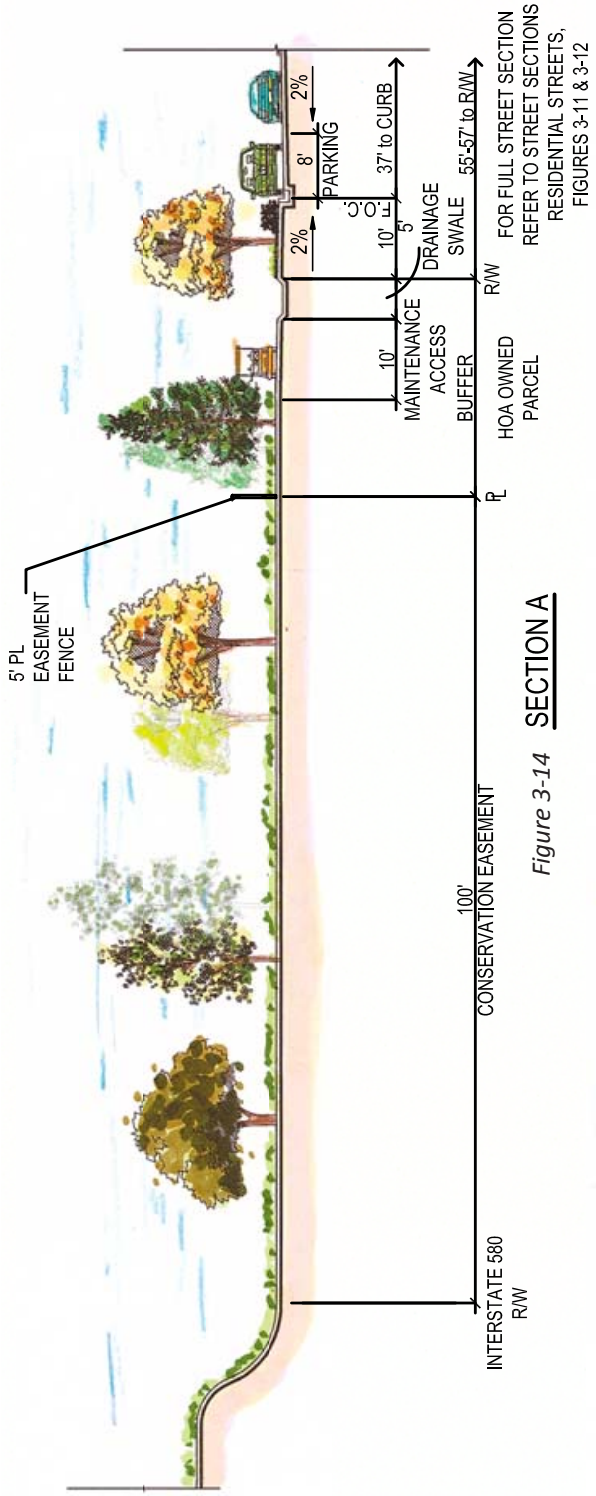

SECTION A

Figure 3-14

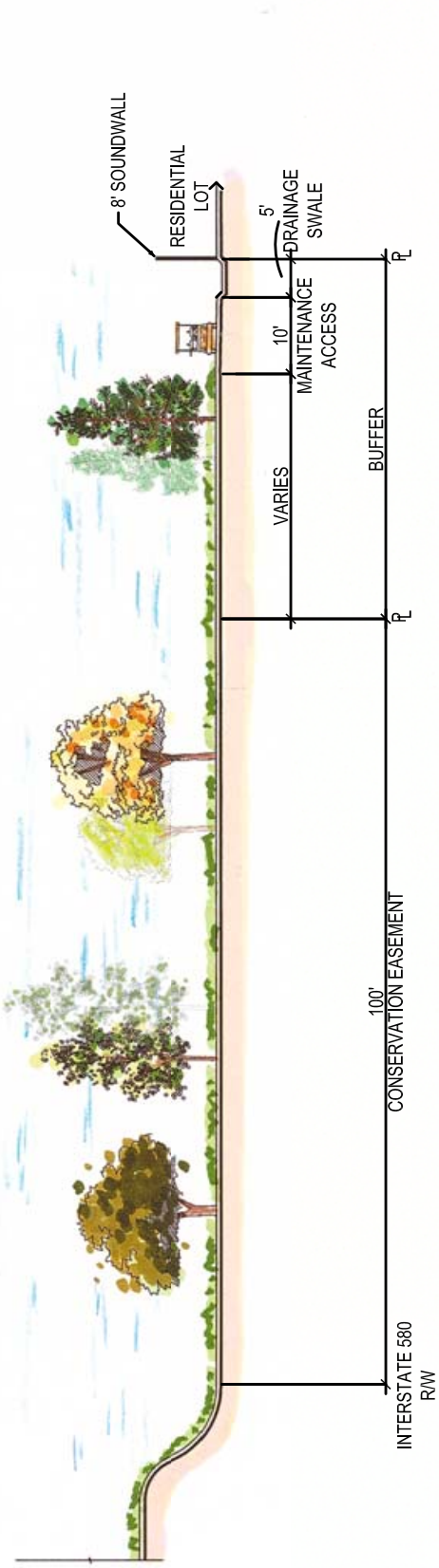

Figure 3-15 SECTION B

Typical aesthetic flavor of the design and/or maintenance of Conservation Easement area and buffer along the 580 Interstate Fwy corridor with Quercus agrifolia.

5'-0" Easement Fence acts as a barrier to wildlife, domestic animals and pedestrians.

8'-0" Sound barrier/ Sound wall acts as a sound barrier, as well as a physical barrier to wildlife, domestic animals and pedestrians.

Photo represents block wall material finish and texture. Color of wall to be as specified in the wall and fence section 3.4.11 within this document.

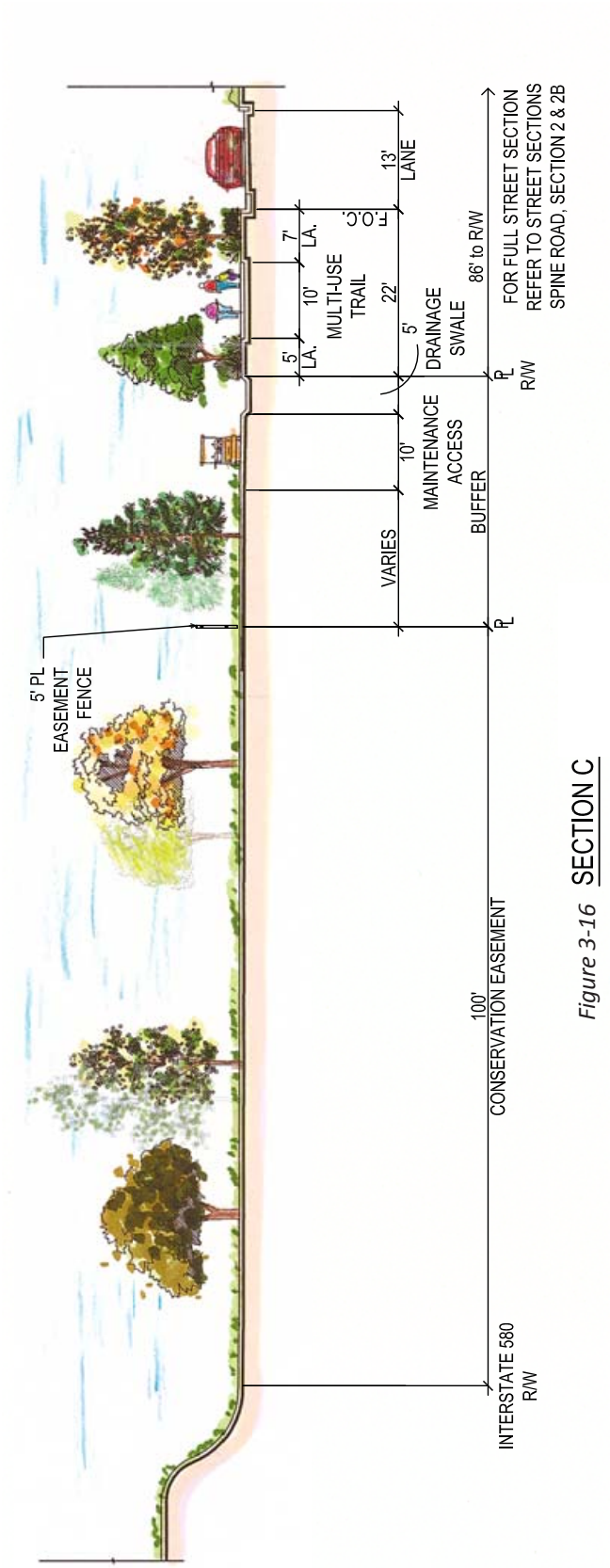

Figure 3-16 SECTION C

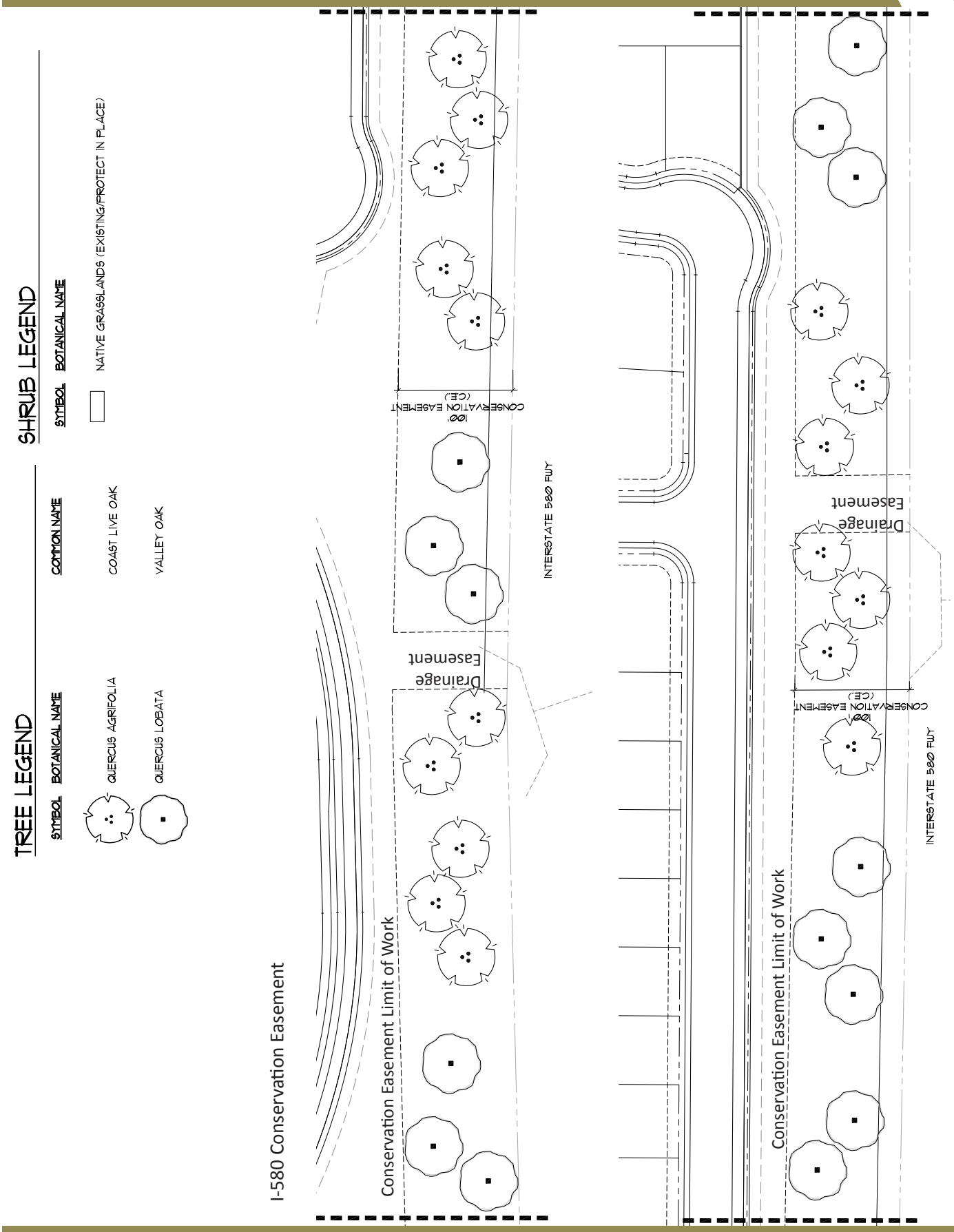

Figure 3-17 SAMPLE of Planting Scheme

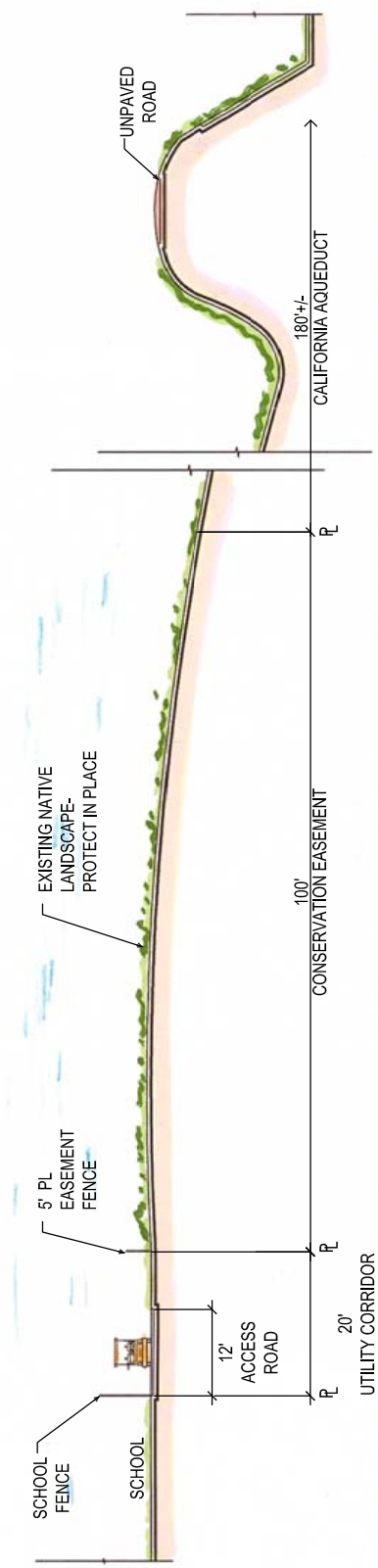

Figure 3-18 SECTION D

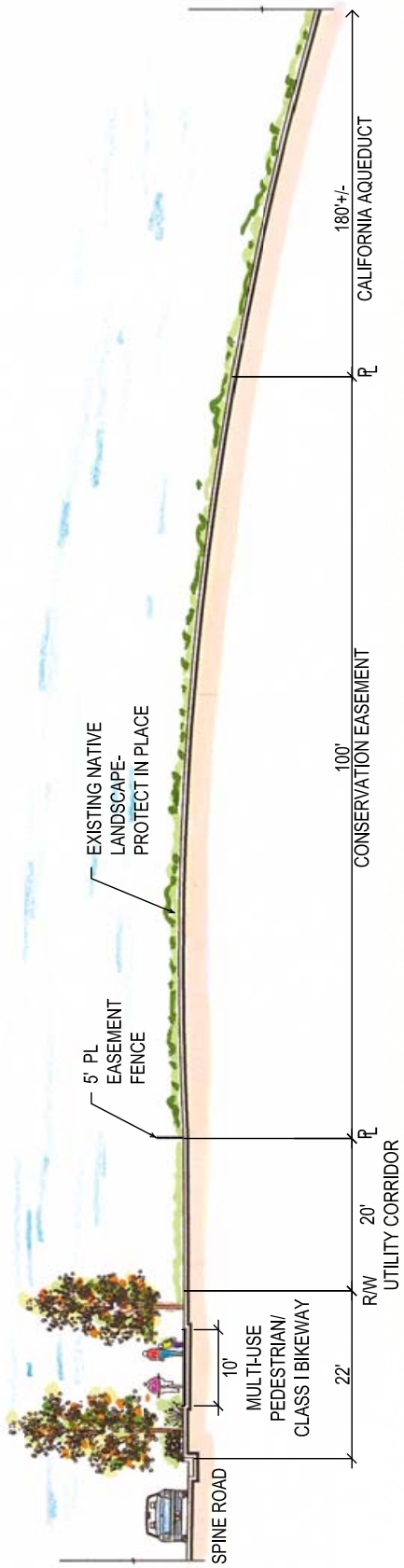

Figure 3-19 SECTION E

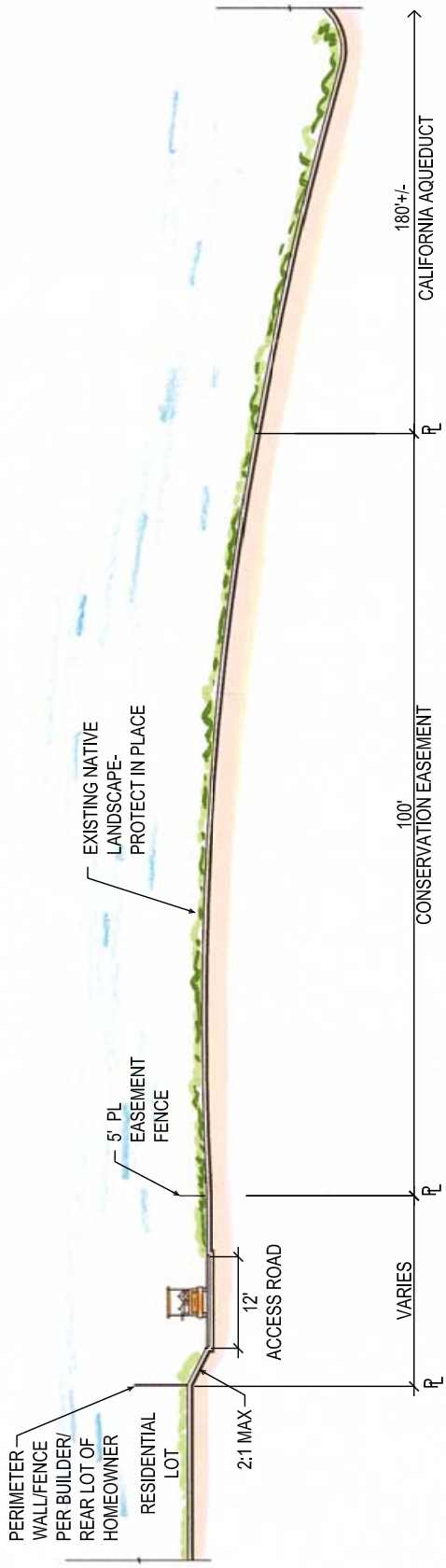

Figure 3-20 SECTION F

3.4.8 Conceptual Overall Illustrative Parks and Landscape Plan

Within the residential neighborhood areas, a variety of parks and trail systems with both passive and active recreational elements are planned as centers for recreational and social activities. Public parks shown herein are conceptual in nature. Parks will be designed and improved by the Developer in accordance with the Citywide Parks Master Plan.

Activity nodes, such as trailheads and centrally located pocket parks, are planned at various locations along the Spine Road and will provide additional active and passive recreational elements which may provide picnicking and barbecue amenities including group use opportunities, tot lots, open play areas and court activities. The additional activity nodes will also occur in certain residential neighborhood planning areas, however the final program for each node will be provided by the individual builders.

The parks within the community shall incorporate the following design elements:

- Clearly delineated crosswalks should be provided to connect each park with the surrounding residential neighborhoods where appropriate.
- Landscaping should consider the use of drought tolerant species and be planted to conserve water and reduce irrigation needs. Use of reclaimed water or other water conserving strategies is encouraged.
- Use appropriate lighting in high use areas for safety purposes.
- The use of drought-tolerant landscaping and hydrozoning irrigation systems should be designed effectively.

Figure 3-21 Activity Nodes and Trailheads

Legend
- Activity Node
- Trailhead
- Passive Activity Node

Figure 3-22 Conceptual, Overall Illustrative, Parks and Landscape Plan - Phase 1A

Public Parks shown herein are conceptual in nature. Parks will be designed and improved by the Developer in accordance with the Citywide Parks Master Plan.

- The Public Park 1 is located by the east entrance planned roundabout from the Multi Use Business Park. The recreation program for this park includes sufficient parking, a soccer field overlay, a large age separated tot lot area, several picnic opportunities, shade structures, a large plaza area with bench seating, a restroom facility and an enclosed trash container area. Expansive open space areas for passive recreation use are planned as well as a trail system connection to the main loop road.

Figure 3-23 Public Park 1

- The Public Park 2 is centrally located in the project south of the Retention Basin. A Retention Basin is adjacent to Public Park 2, as shown in Figure 3-24, and it will serve as a full functioning retention basin. Access to the retention basin will be restricted to service vehicles only and will be encircled by a maintenance road and screen trees. The recreation program for this park includes sufficient parking, a soccer field, a large age-separated tot lot area, several picnic opportunities, shade structures, areas with bench seating, a restroom facility and an enclosed trash container area. The park also provides a connection to the west and east areas of the project by the Pipeline Easement Trail system.

Figure 3-24 Public Park 2

- The Public Park 3 is located by the planned roundabout west of the project. The recreation program for this park includes sufficient parking, a soccer field, a baseball field overlay, a large age separated tot lot area, several picnic opportunities with barbecues, shade structures, areas with bench seating, a restroom facility, and an enclosed trash container area. There will be a trail system connection to Pipeline trail easement and Spine Road.

Figure 3-25 Public Park 3

Images and graphics represent conceptual programming design for spatial reference only and are subject to change- Public Park Program will be the responsibility of the City.

Typical section of proposed angled parking located at the Public Parks. The street will have a landscape median that will provide a safety buffer between the drive aisles and the adjacent street travel lanes.

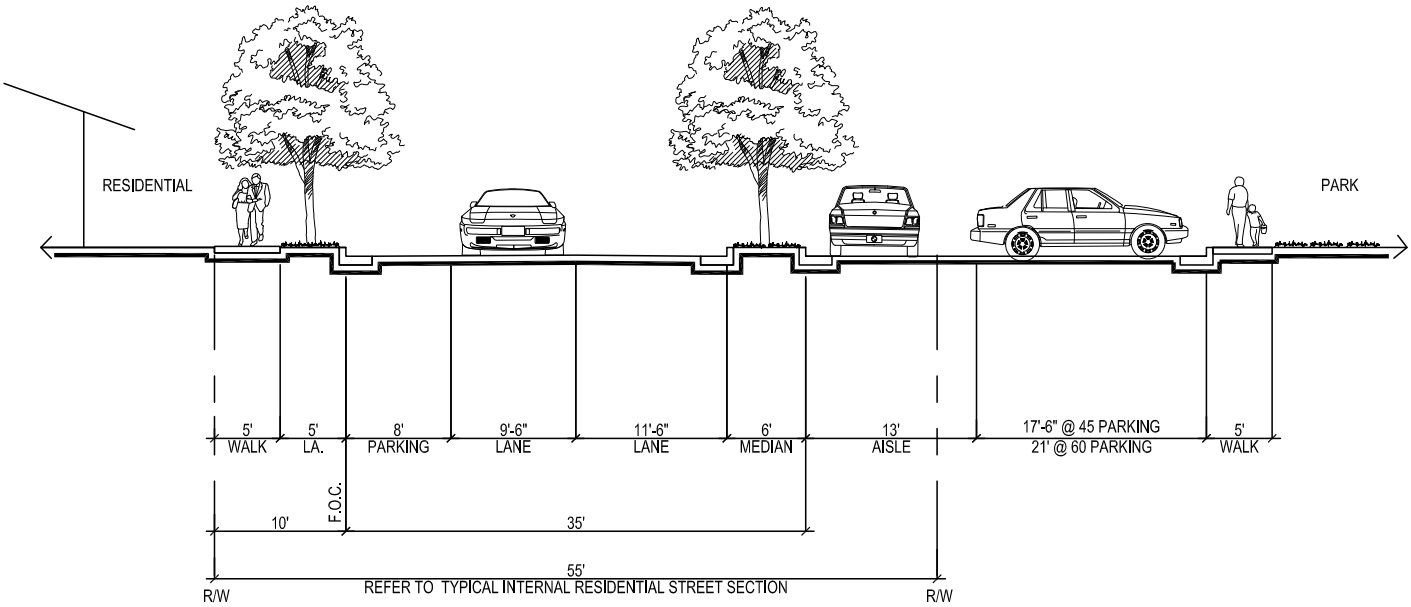

Angled Parking (Typ.)

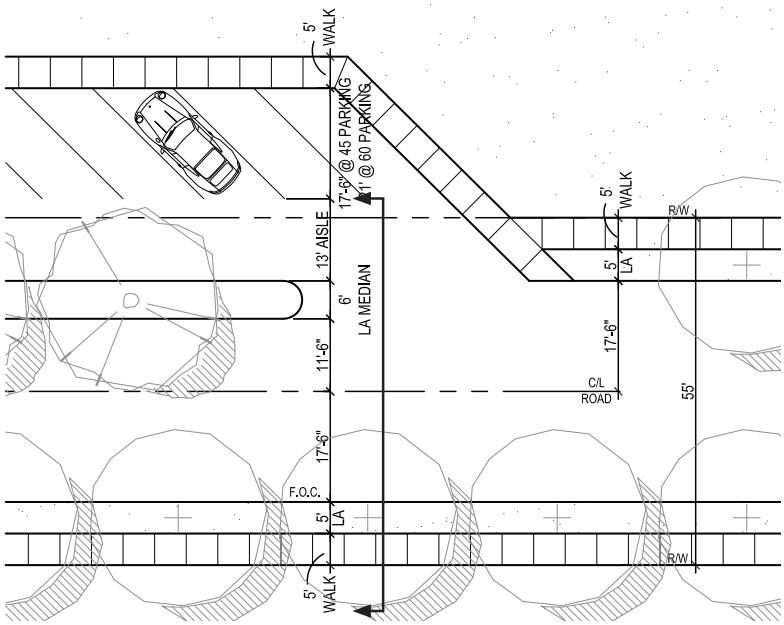

Figure 3-26 Public Park Angled Parking Street Section and Plan View

This Village Green Landscape area serves as a connecting point to the Pipeline Easement Trail and softens the edge of the roundabout. This passive open space area includes a themed gazebo with picnic and seating opportunities, open lawn area and pedestrian pathways. The landscape design will include a mixture of canopy and vertical trees for shade.

Figure 3-27 Village Green

The HOA parks shown herein are conceptual in nature and may change over time based on City requirements and approvals.

There are three HOA Park areas surrounding the Phase 1A central roundabout. The largest of the three areas includes programatically an active age-separated tot lot, two picnic shelters, picnic tables, ash/trash urns, and bike racks. The park also provides a connection to the north and south areas of the project by the Pipeline Easement Trail system. Ornamental landscaping adjacent to the pipeline easement includes a decomposed granite groundcover with native plantings providing a garden design element. The two smaller HOA passive park areas both include open lawn areas, pedestrian pathways and shade structures with benches and unique architectural design elements to soften the edges of the roundabout. The landscape design will include a mixture of canopy and vertical trees for shade.

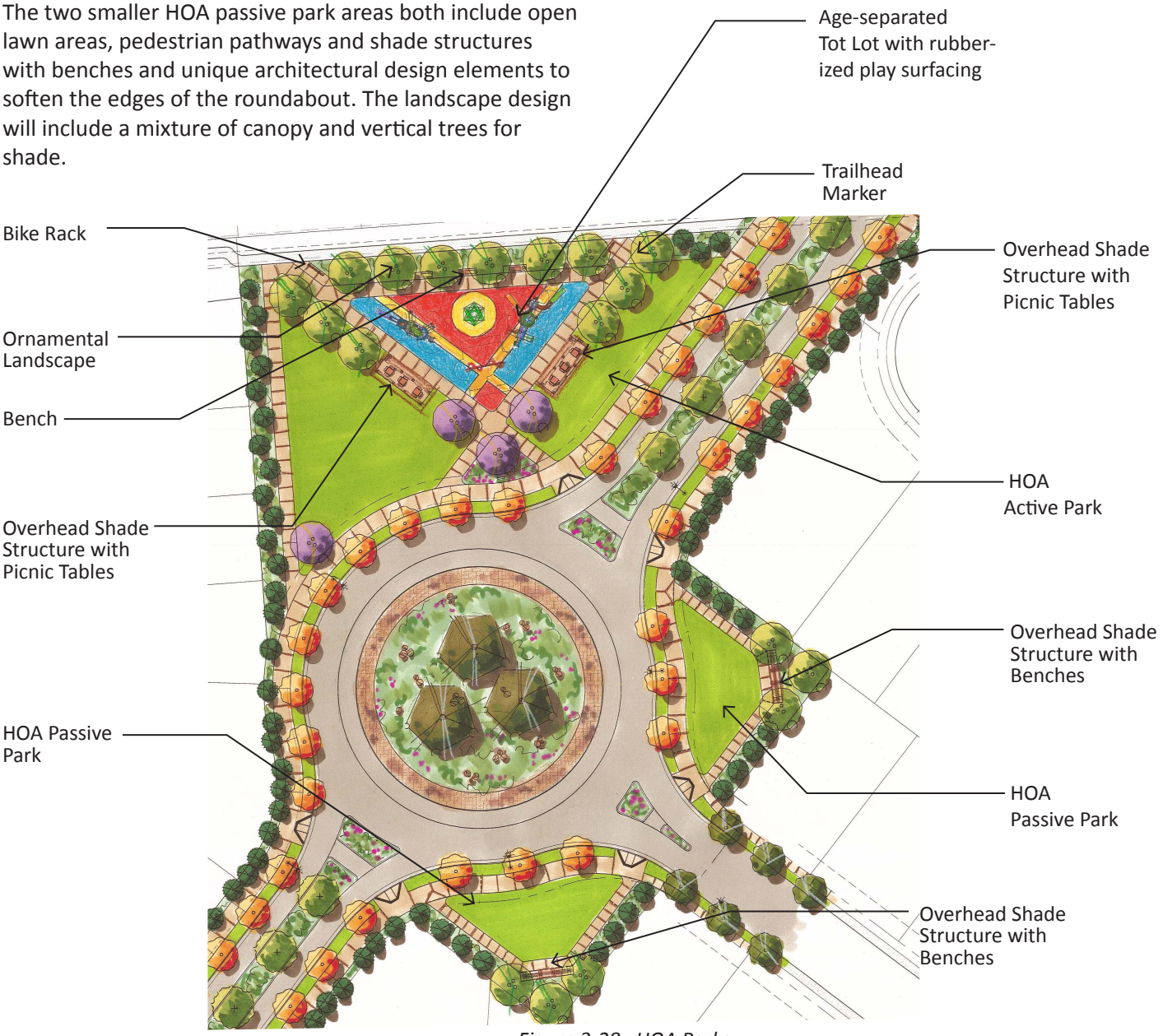

Figure 3-28 HOA Parks

The HOA parks shown herein are conceptual in nature and may change over time based on City requirements and approvals.

Example of HOA Active Park Area

Example of a passive park focal trellis/overhead structure

Example of an Oak Tree focal element with a roundabout

Example of an active park area/ site furniture and plant material

Example of an active open play area field within a public park

3.4.9 Lighting

The site furnishings and lighting will be used to enhance, unify and reinforce the character of the overall site design. The site furnishings and lighting shall be made of natural materials/ elements that can be tied to the color and texture of the proposed monuments, walls/fences and architecture.

Lighting shall incorporate the following:

- All exterior light fixtures and fixture placement shall comply with the standards specified in the City's design documents. Use of energy-efficient technology is encouraged.
- Streets and intersections should be well lighted in accordance with the City standard illumination levels. Low-level lighting for pedestrian safety should be installed where appropriate. Intersections should have increased light levels for definition and to mitigate automobile/ pedestrian conflicts.
- Accent lights should be installed at all community monumentation locations.
- Street lights shall conform to the overall project theme and City standards.
- All exterior lighting for identification, water features, and landscaping should be subdued and indirect to prevent spill over onto adjacent lots and streets.
- Lit bollards are proposed for pedestrian safety and provided in public open spaces.
- Removable bollards are proposed to provide a barrier at the driveway aprons to access easements.

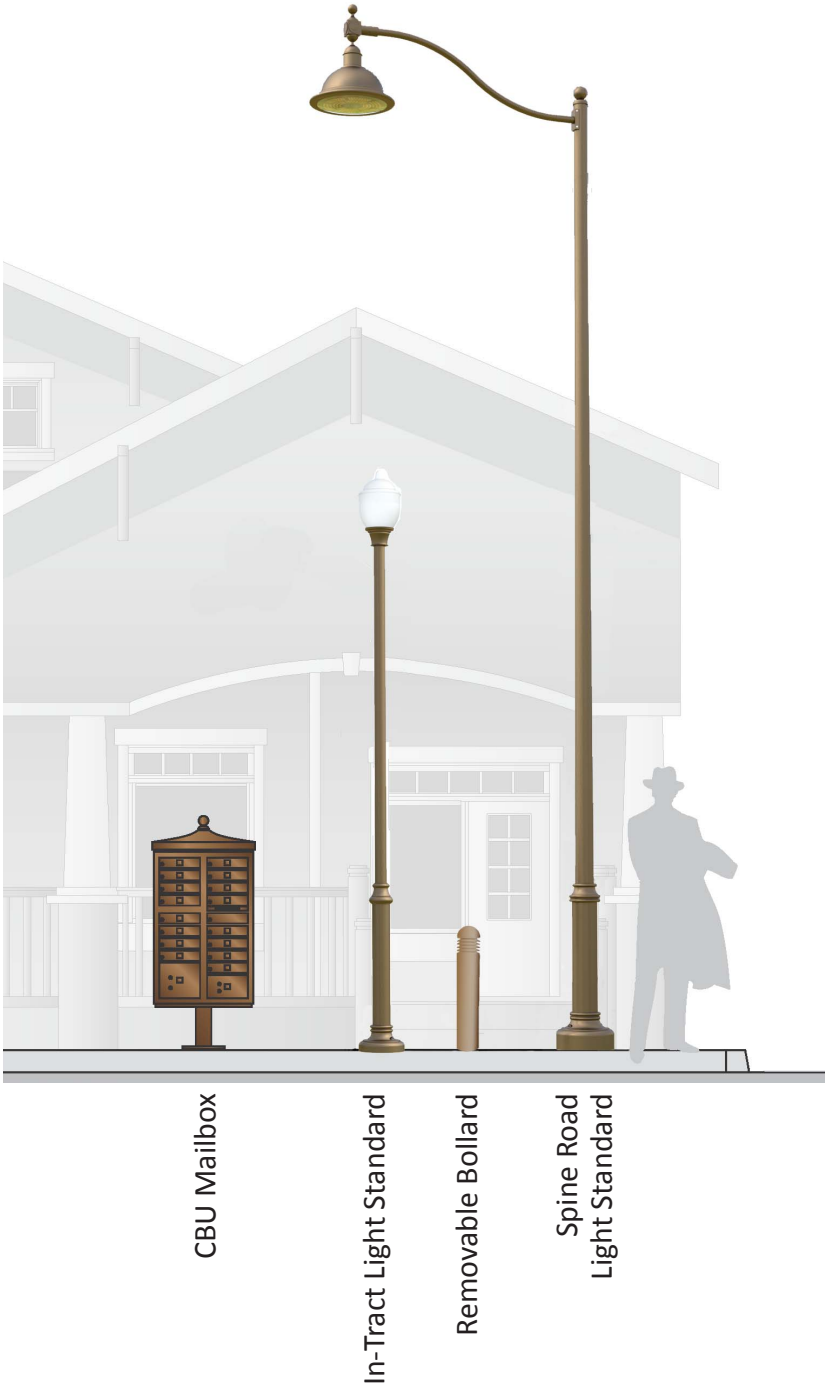

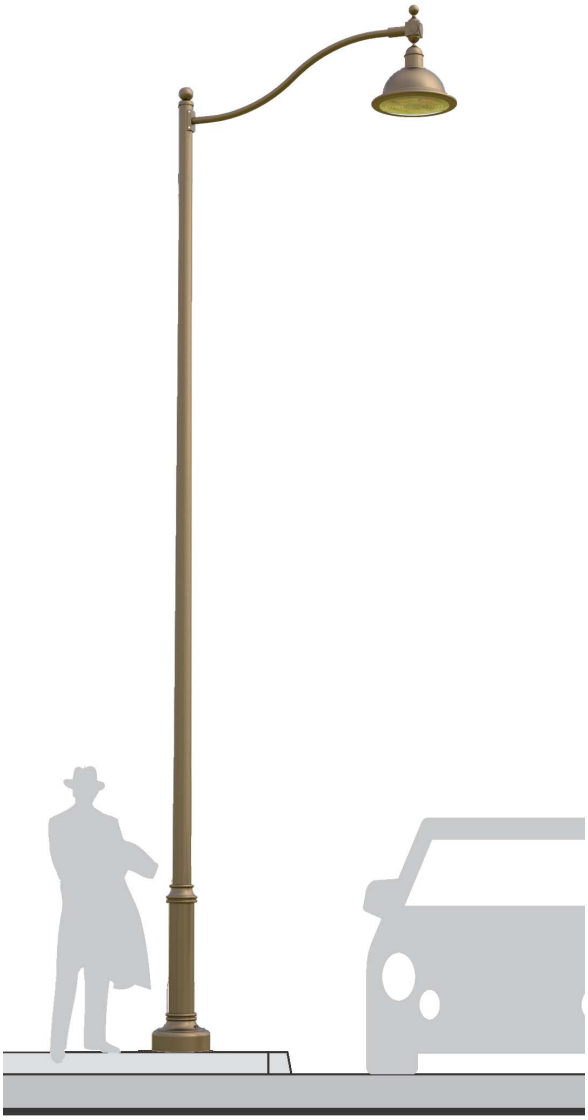

Lighting Family shown as conceptual design intent. Available through Associated Lighting Reps., Inc. or equivalent (510) 638-3800

- The type and location of building lighting should prevent direct glare onto adjacent property, streets and skyward by the use and application of shields.
- Pedestrian scale fixtures are encouraged over “high mast” poles.
- Consistent lighting fixtures shall be used throughout the Specific Plan Area to enhance community character.
- Light shall be confined on-site through orientation, the use of shading/directional controls, and/or landscape treatment.
- Light standard banners are encouraged to promote community awareness and activities.

Spine Road
Light Standard

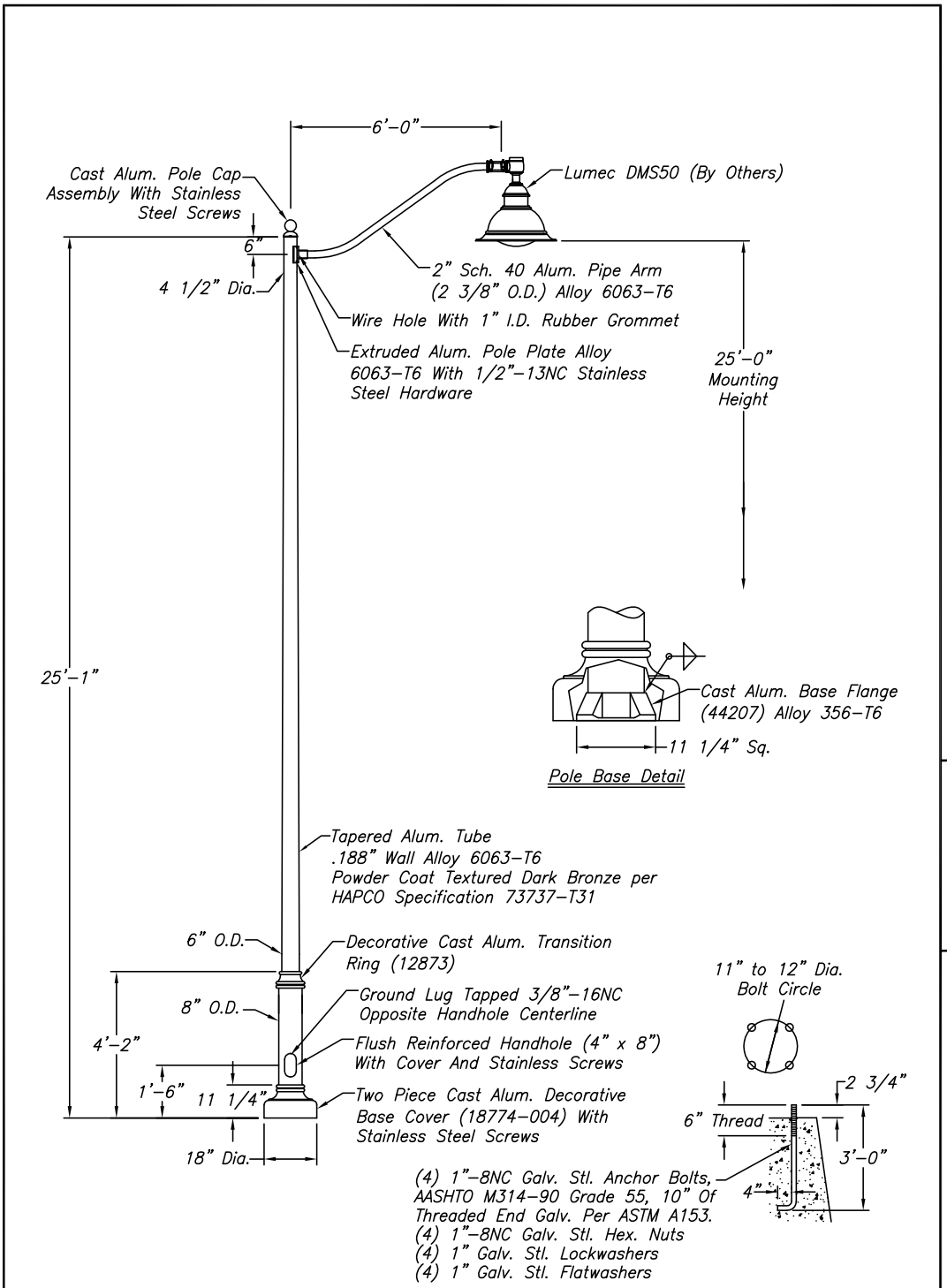

Lighting Family shown as conceptual design intent. Available through Associated Lighting Reps., Inc. or equivalent (510) 638-3800

In-Tract Light Standard

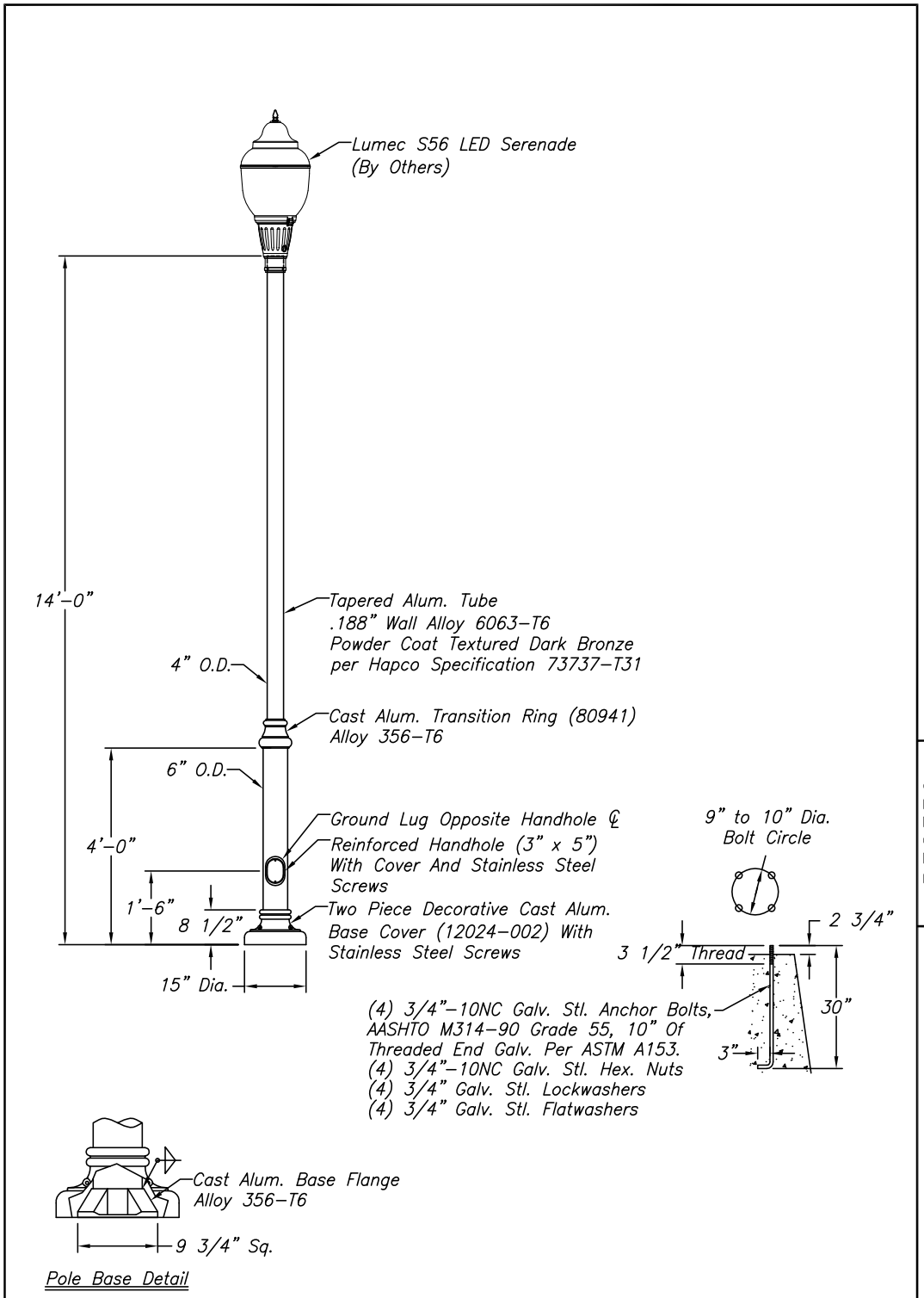

Lighting Family shown as conceptual design intent. Available through Associated Lighting Reps., Inc. or equivalent (510) 638-3800

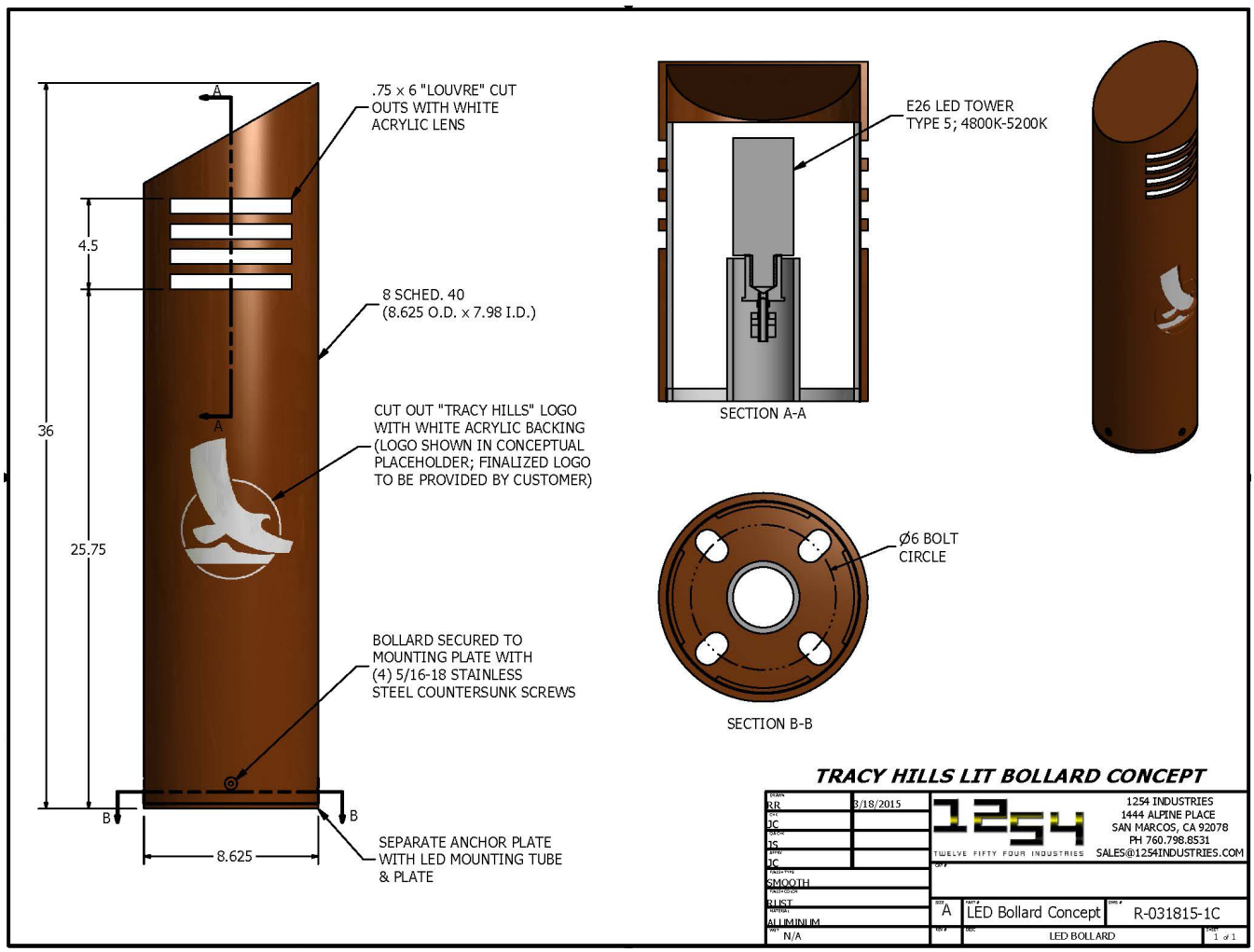

Lighting Family shown as conceptual design intent.

3.4.10 Furniture

Site furnishings shall include, but is not limited to, lighting, tables, benches, dog bag dispensers, and trash receptacles. Site furnishings shall be located throughout the community in the public parks, right-of-way, HOA/private areas, open space, and commercial areas.

3.4.11 Walls and Fences

Maintaining quality and character of all aspects of the public realm is a key place making principle. The wall and fence design criteria is intended to provide variety and privacy for each lot while providing continuity and unity within the community.

Walls and fencing will be used throughout the community to complement the overall design theme, establish community identity, provide protection from roadway and other noise, and allow privacy and security in residential areas. The use of walls and fences can also serve to accentuate neighborhood features in addition to screening streets and adjacent uses.

The following types of walls (solid and opaque includes wood fencing) and view fences (open and largely transparent) have been selected for use within different areas of the project site. All wall and fence heights are measured from the higher grade elevation on either side of the wall or fence. Figure 3-29 Master Wall and Fence Plan Phase 1A is provided to help unify and reinforce community character.

- Decorative walls and/or screen walls shall be integrated with the community design intent, as well as the overall landscape design.
- All community theme walls and fences shall be consistent in design as outlined herein.
- View fencing of full height tubular steel may be used, and pilasters incorporated into steel fencing.
- Shrubs are encouraged to be planted along community walls to soften the visual character.
- The Spine Road block walls will be permitted up to an 8' height. In some instances where the Pipeline Easement is adjacent to the Spine Road, Simtek fences are proposed.
- Continuous fencing or walls shall have pilasters located at corners, at change in wall/fencing materials and significant redirections in the fence line.

** All Wall and Fencing materials and colors specified are for design intent. Should materials and/or colors not be available at time of installation, alternative materials and/or colors shall be substituted as specifed "or equal" and shall be approved by City staff. Design intent is for Walls and Fences to be consistent community-wide.*

LEGEND

Symbol	Description of Community Theme Walls/Locations
	7'-0" Proto II Block Decorative Wall- Split face Block w/cap.
	8'-0" SimTek Fence with 1' Buried - 7'-0" Overall. OR Split face Block w/cap.
	6'-0" Block Wall - Split face Block w/ cap
	8'-0" Sound Wall- Split face Block w/cap.
	5'-0" Conservation Easement Fence- No Finish- allow to rust naturally
	3'-6" Concrete Split Rail Fence

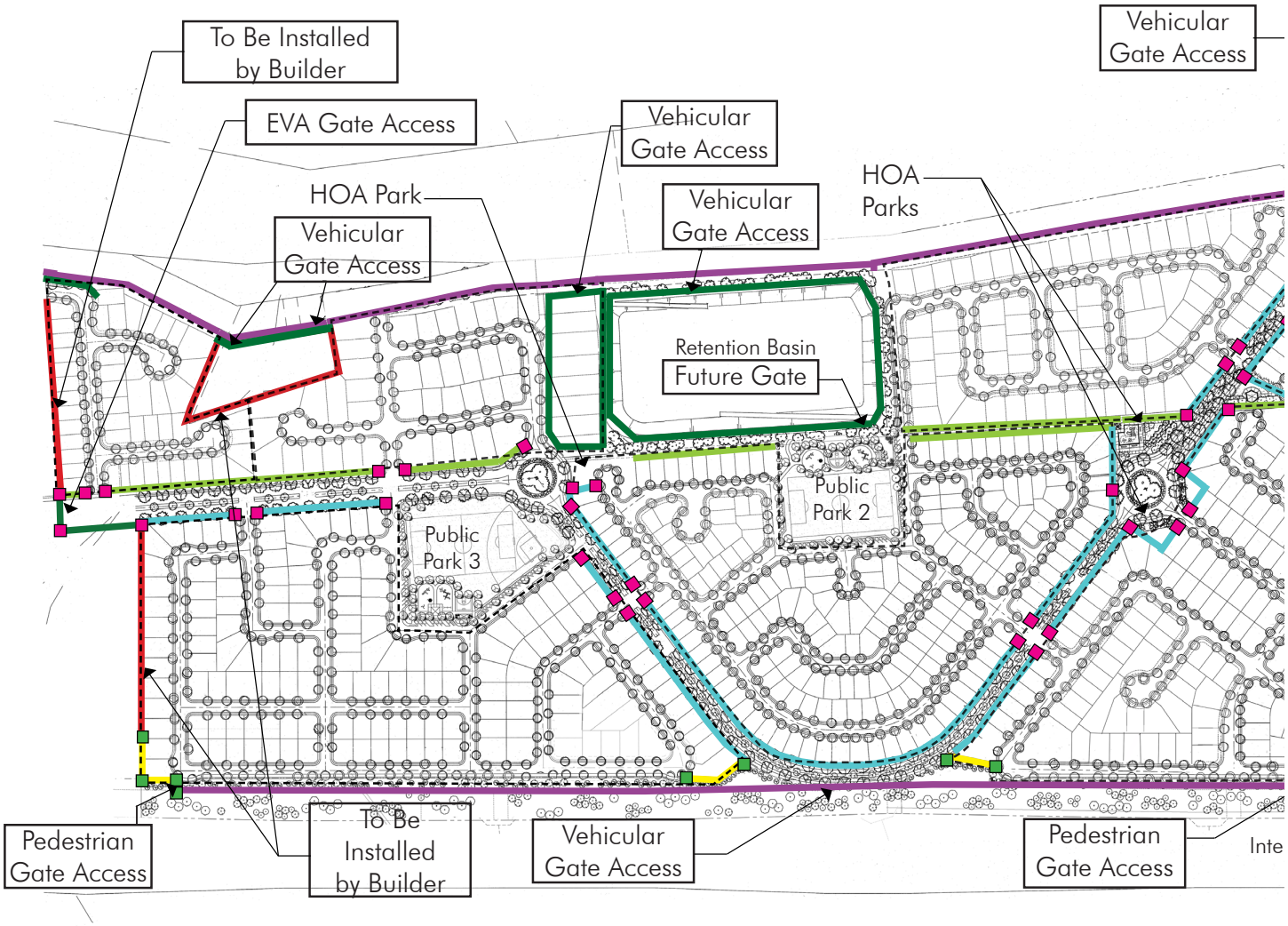

Figure 3-29 Master Wall and Fence Plan - Phase 1A

LEGEND

Symbol	Description of Community Theme Walls/Locations
	4'-0" Black Vinyl-clad Chain Link Fence on mowcurb at Dog Park (Height specification per the City of Tracy)
	Low Block Wall at Entry Monument Signage
	8'-0" Block Wall- Split face Block w/cap. (By others)
	8'-6" Pilaster- Split face Block w/cap.
	7'-6" Pilaster- Split face Block w/cap.
	6'-6" Pilaster- Split face Block w/cap.

Approximate Pilaster location shown

The following photos should not be construed as the exact wall and fence height, color and material, but should be used as preferred examples. The sketches and graphic representations contained within these Design Guidelines are for conceptual purposes and are provided as visual aids in understanding the basic intent of the Guidelines and to present examples of their potential implementation.

** All Wall and Fencing materials and colors specified are for design intent. Should materials and/or colors not be available at time of installation, alternative materials and/or colors may be substituted as specifed "or equal" and shall be approved by City staff. Design intent is for Walls and Fences to be consistent community-wide.*

7'-0" Proto II Decorative Block Wall. Split Face block with cap.

4'-0" high Black Vinyl-clad Chain Link Fence

Spine Road and Pipeline Easement Fence available through SimTek. Color: Eco-Brown or equal

Conservation Easement Fence
No finish- allow to rust naturally

Pilaster: Split Face Column block w/precision cap
Wall: Split Face block w/precision cap
Color: #113 beigey-brown Basalite product or equal

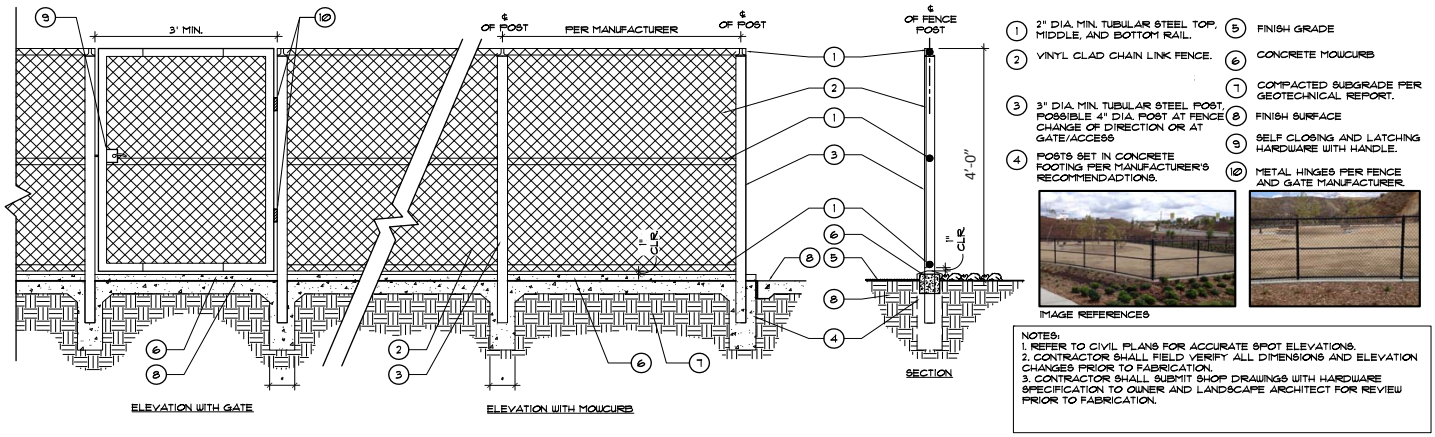

Fig. 3-30 4'-0" Black Vinyl-coated Chain Link Fence

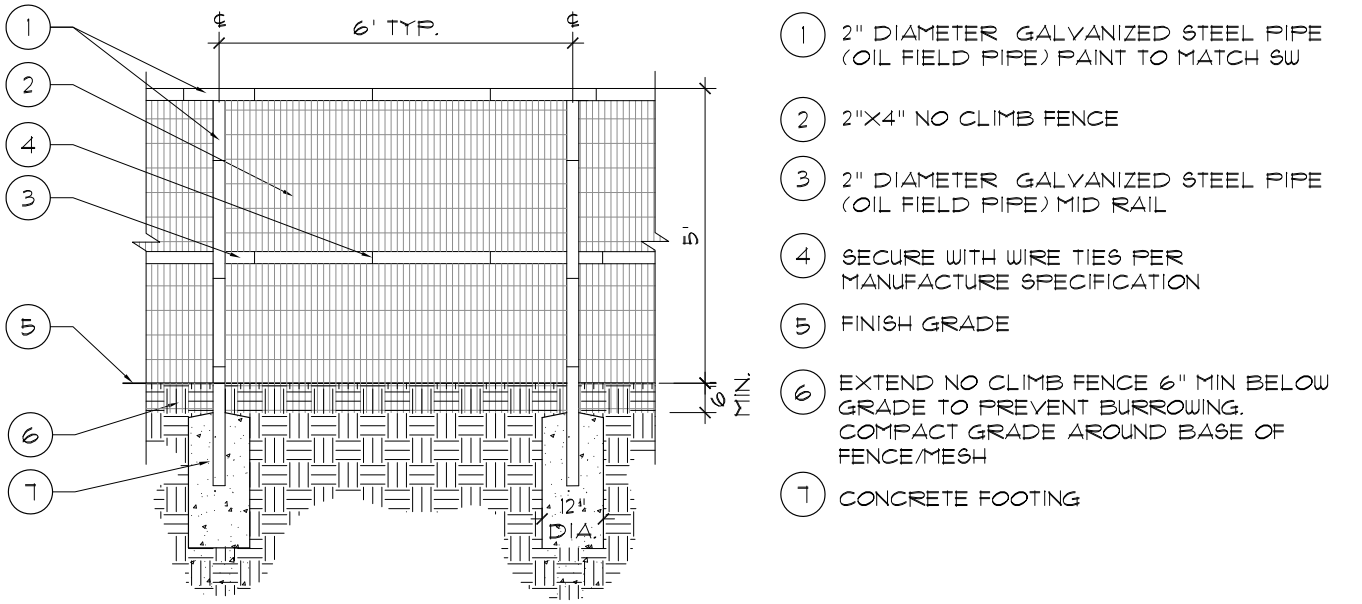

Fig. 3-31 5'-0" Easement Fence

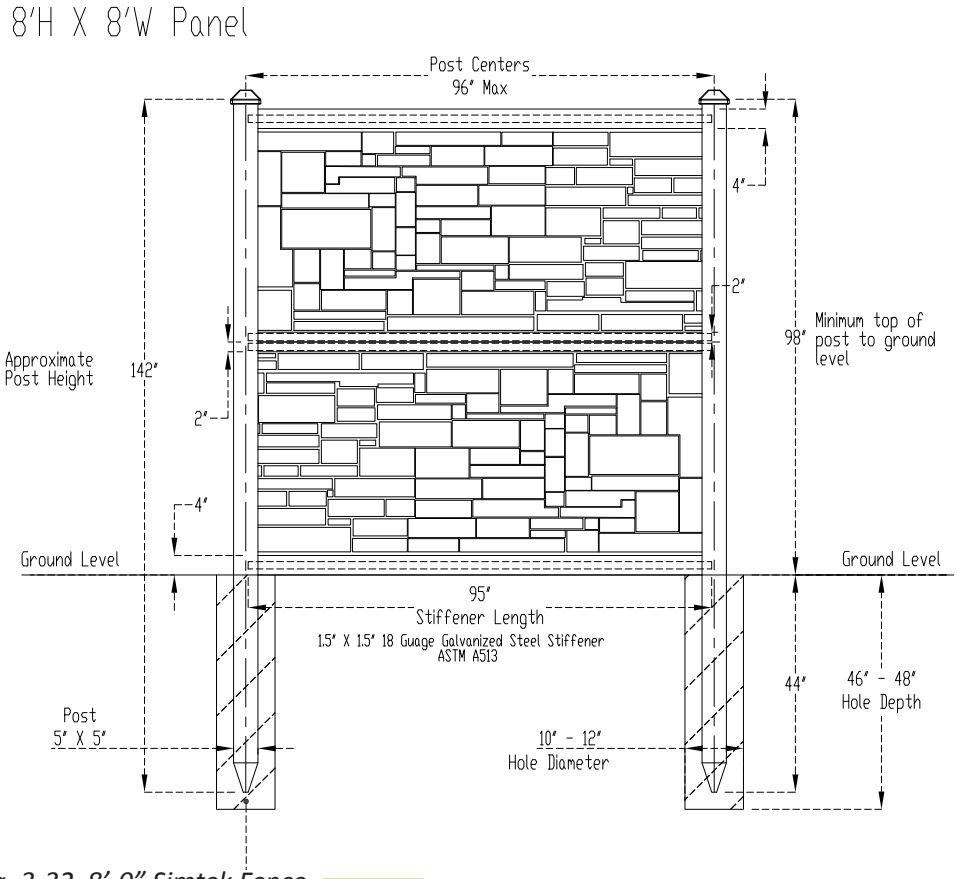

Fig. 3-32 8'-0" Simtek Fence
Color: Eco Brown or equal

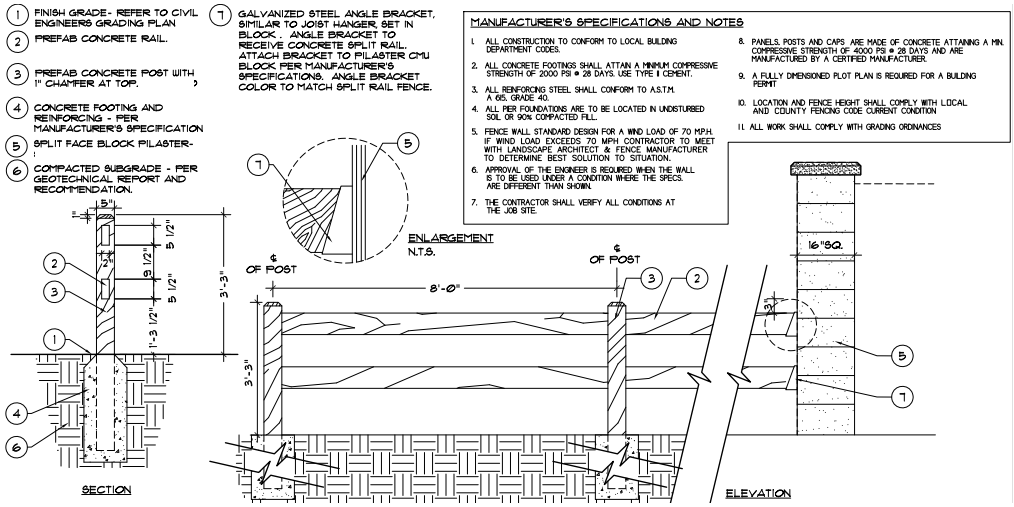

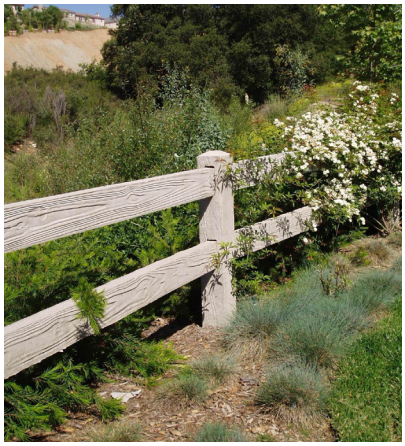

Fig. 3-33 3'-6" Concrete Split Rail Fence

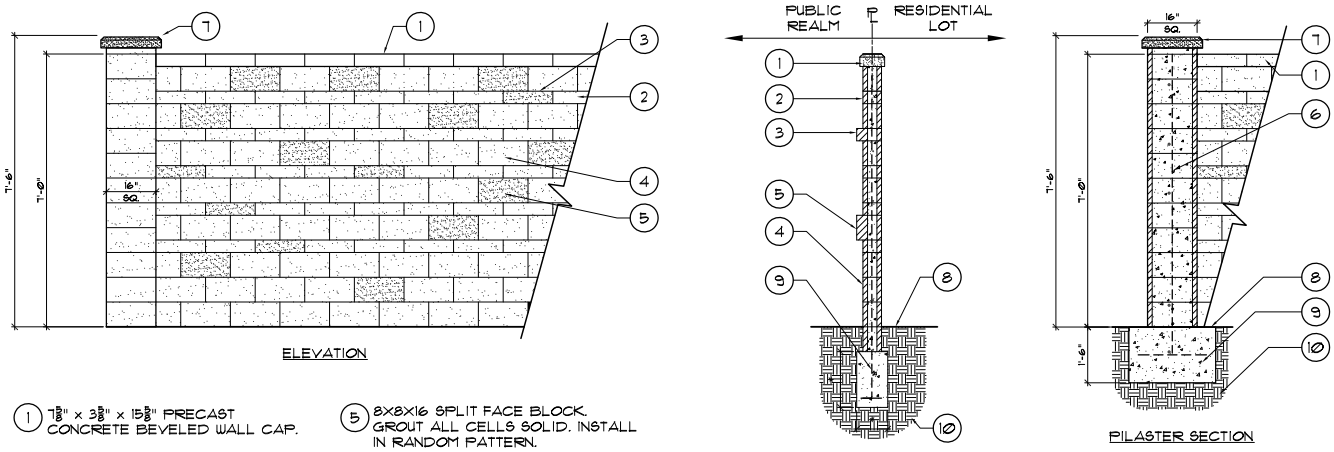

1. $7\frac{5}{16}$" x $3\frac{5}{8}$" x $15\frac{5}{8}$" PRECAST CONCRETE BEVELED WALL CAP.
2. 6X4X16 SPLIT FACE BLOCK. GROUT ALL CELLS SOLID.
3. 8X4X16 SPLIT FACE BLOCK. GROUT ALL CELLS SOLID. INSTALL IN RANDOM PATTERN.
4. 6X8X16 SPLIT FACE BLOCK. GROUT ALL CELLS SOLID.
5. 8X8X16 SPLIT FACE BLOCK. GROUT ALL CELLS SOLID. INSTALL IN RANDOM PATTERN.
6. 16" SQ. COLUMN SPLIT FACE BLOCK PILASTER. GROUT ALL CELLS SOLID OR PER STRUCTURAL ENGINEER SPECS
7. PRECAST CONCRETE BEVELED PILASTER CAP.
8. FINISH GRADE
9. FOOTING AND REINFORCING PER STRUCTURAL ENGINEER
10. COMPACTED SUBGRADE PER GEOTECHNICAL REPORT

NOTES:
1. GROUT TO MATCH BLOCK COLOR.
2. MASONRY AND COLORS AVAILABLE THROUGH BASALITE #113 AND #375 OR EQUAL. CAP COLOR TO BE BASALITE #375L OR EQUAL.

Fig. 3-34 7'-0" Proto II Block Wall

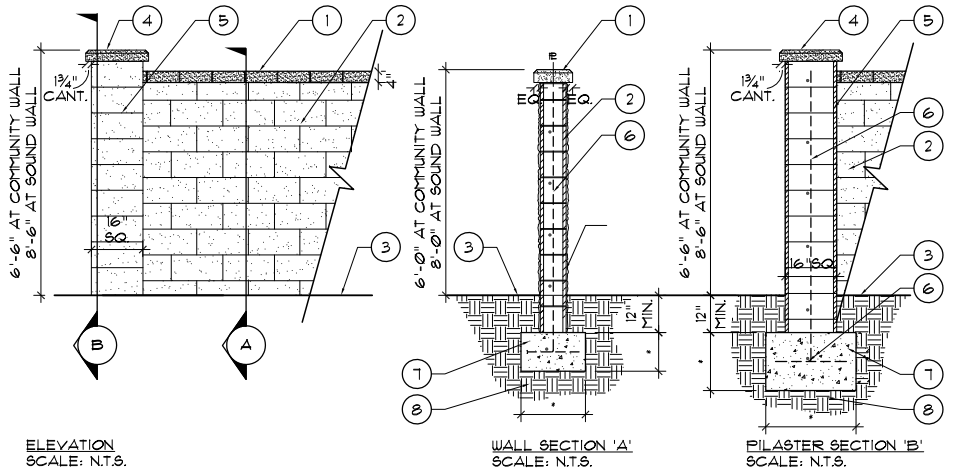

1. 3⅝"X7⅝"X15⅝" PRECISION BEVELED WALL CAP.
2. 6X6X16 SPLIT FACE BLOCK. GROUT ALL CELLS SOLID.
3. FINISH GRADE
4. 19½ x4x19½ PRECISION BEVELED PILASTER CAP.
5. 16X8X16 SQ. COLUMN SPLIT FACE BLOCK PILASTER. GROUT ALL CELLS SOLID OR PER STRUCTURAL ENGINEER SPECIFICATIONS
6. REINFORCEMENT PER STRUCTURAL ENGINEER PLANS
7. CONCRETE FOOTING - PER STRUCTURAL ENGINEER PLANS
8. COMPACTED SUBGRADE PER GEOTECHNICAL REPORT

NOTE:
1. GROUT TO MATCH BLOCK COLOR.
2. MASONRY AND COLORS AVAILABLE THRU BASALITE #113 OR EQUAL.

Fig. 3-35 6'-0" Builder Block Wall or 8'-0" Sound Wall

3.4.12 Landscape Master Tree Plan

The plant list for this project was developed to reinforce the community theme and to create some seasonal change with a mixture of deciduous and evergreen plants while maintaining a well-balanced landscape. Many plants on this list are considered low water and drought tolerant species and were chosen based on their specific growth characteristics, including flowering and foliage color, texture and form.

The following items should be considered in the community landscape design process:

- Consistent street tree themes should be related to the hierarchy of the street system.
- Extensive use of trees, vines and shrubs to soften community theme wall and fencing.
- Recognition of existing natural conditions and situations.
- Use of both “formal” and “informal” planting arrangements, depending upon the particular condition.
- “Layering” of the shrub understory to create depth, variety and interest.
- Refer to local codes for spacing distance from utilities, light poles, etc.

Fig. 3-36 Master Tree Plan - Phase 1A

Symbol	Description/Location
	Spine Road (Refer to Construction Document set prepared by FORMA) Parkway Tree (both sides) - *Platanus acerfolia* 'Bloodgood' at 35' O.C. Backdrop Tree - *Pinus canariensis* (informal massing) Median Tree - *Rhus lancea* at 35' O.C. Roundabout Tree - *Quercus wislizenii* (3 per Roundabout) and *Cedrus deodara* (3 per Roundabout at HOA Park)
	Mixed Use Business Park Refer to Section 3.4.15 for Landscape Plant Matrix, "Mixed Use Business Park" column

Frontyard Trees- Each lot is required to receive (1) 24" box tree in addition to the street trees/ parkway trees shown in the Master Tree Plan. Tree species to be determined by the builders' Landscape Architects in accordance with the enclosed Plant Matrix and will be associated with the various architectural elevations.

Symbol	Description/Location	
	Neighborhoods 1, 3, and 8 Parkway Trees	
	Primary Tree -	*Ulmus wilsoniana* 'Prospector'- (Prospector Elm) Minimum 36" Box at 30' O.C.
	Secondary Tree -	*Quercus rubra* (Red Oak)
	Secondary Tree -	*Chionanthus retusus* (Chinese Fringe Tree)
	Neighborhoods 4, 7, and 6 West (W) Parkway Trees	
	Primary Tree -	*Zelkova* 'Village Green' (Village Green Zelkova) Minimum 36" Box at 30' O.C.
	Secondary Tree -	*Ginkgo biloba* 'Autumn Gold' (Autumn Gold Ginkgo-male)
	Secondary Tree -	*Arbutus* 'Marina' (Arbutus)
	Neighborhoods 2, 5, and 6 East (E) Parkway Trees	
	Primary Tree -	*Pistacia chinensis* 'Keith Davey' (Chinese Pistache-male) Minimum 36" Box at 30' O.C.
	Secondary Tree -	*Koelreuteria bipinnata* (Chinese Flame Tree)
	Secondary Tree -	*Carpinus betulus* (Hornbeam)

3.4.13 Landscape Irrigation

All landscaped areas will be permanently irrigated using an automatic, underground irrigation system or bubbler low-flow systems. The irrigation system will be separated into several systems based on water requirements of each hydrozone. Hydrozone separations will be based on sun orientation and water requirements of the plant material.

Irrigation of required landscaped areas shall be either by automatic overhead high efficiency spray nozzle or drip irrigation and matched precipitation rate, low gallonage sprinkler heads, bubblers, and timing devices. Timing devices shall include soil moisture sensors and rain sensing override devices. Sprinkler pop-up heights shall range from 6” in turf areas and 12” high in shrub/groundcover beds, where a drip system may not be applicable. The irrigation system shall be capable of operating automatically by incorporating an electric weather based and climate-smart irrigation controller or advanced solar technology components and low voltage electric remote control valves. Quick coupling valves, as required, shall be strategically located to provide supplemental water to plant material and for wash down purposes. All remote control and quick coupling valves shall be located and installed within the shrub beds wherever possible.

The irrigation system shall be compliant with the State’s (Department of Water Resources) Model Water Efficient Landscape Ordinance. Irrigation water use shall comply with water allotments defined in the State’s Model Ordinance.

3.4.14 Utility and Equipment Screening

All utilities above/below ground, including water tanks and other equipment providing service to the residential neighborhoods and the commercial and industrial areas shall be screened to prevent unsightly conditions that detract from the overall aesthetics.

- Above ground utility equipment should be screened from view by the use of hedge, tree or larger screening plant material and/or vines where feasible, subject to utility provider requirements or restrictions.
- Above ground utility equipment, vents, access doors to underground utility shall be located with sufficient space to allow clearance between the screening for the utility equipment and any paved surface including streets, driveways, and walkways.
- Electrical transformers shall be located within vaults.
- All proposed water storage tanks shall be screened from view to the extent practical through the use of natural terrain, earthen berms, and landscaping.
- The developer shall prepare preliminary plans for each proposed water storage tank and submit the plans for review and approval in conjunction with the Tentative Map or Development Review Permit.
- The applicant shall geologically evaluate and certify each proposed water storage tank as suitable prior to construction of any water storage tank.
- Pump House shall be designed to minimize maintenance and to be compatible with surrounding uses.

3.4.15 Landscape Plant Matrix

Arbutus unedo

Cercis occidentalis

Chilopsis linearis

Ginkgo biloba 'Autumn Gold'

Botanical Name	**Common Name**	Entries	Main Road Streetscape	Residential Streetscape/ Front Yards	Neighborhood Parks	School	Mixed Used Business Park	100'Conservation Easement
TREES								
Acer buergeranum	Trident Maple		●	●	●		●	
Alnus cordata	Italian Alder		●		●	●	●	
Alnus rhombifolia	White Alder		●		●	●	●	
*Arbutus 'Marina'**	NCN	●	●	●	●	●	●	
*Arbutus unedo**	Strawberry Tree	●	●		●	●	●	
Carpinus betulus	European Hornbeam			●	●	●	●	
Catalpa speciosa	Western Catalpa			●	●	●	●	
Cedrus atlantica	Atlantic Cedar				●	●	●	
*Cedrus deodara**	Deodar Cedar		●		●	●	●	
*Cercis occidentalis**	Western Redbud	●	●	●	●	●	●	
*Chilopsis linearis**	Desert Willow			●	●	●	●	
Chionanthus retusus	Chinese Fringe Tree	●		●	●			
Cinnamomum camphora	Camphor Tree	●		●	●	●	●	
Citrus spp.	Citrus					●	●	
Cupressus sempervirens	Italian Cypress	●			●	●	●	
Elaeocarpus decipiens	Japanese Blueberry			●	●	●	●	
Eriobotrya deflexa	Bronze Loquat	●			●	●	●	
*Eriobotrya japonica**	Loquat	●		●	●	●	●	
Fraxinus americana 'Autumn Purple'	Autumn Purple White Ash		●		●	●	●	
Fraxinus holotricha 'Moraine'	Moraine Ash				●	●	●	
Fraxinus pennsylvanica 'Urbanite'	Urbanite Ash	●	●	●	●	●	●	
Fraxinus sp. 'Leprechaun'	Leprechaun Ash				●	●	●	
Fraxinus sp. 'Centerpointe'	Centerpointe Ash				●	●	●	
Ginkgo biloba 'Autumn Gold'	Autumn Gold Maidenhair Tree	●	●	●	●	●	●	
Ginkgo biloba 'Princeton Sentry'	Princeton Sentry Maidenhair Tree	●	●	●	●	●	●	
*Juniperus scopulorum 'Skyrocket'**	Skyrocket Juniper	●			●	●	●	
Koelreuteria bipinnata	Chinese Flame Tree			●	●	●	●	
Koelreuteria paniculata	Goldenrain Tree			●	●	●	●	
*Lagerstroemia spp.**	Crape Myrtle	●		●	●	●	●	
*Laurus nobilis**	Sweet Bay				●	●	●	

*Indicates drought-tolerant species
**Indicates that designer must select a low water or drought-tolerant variety only
***Indicates that designer must select a zone-appropriate species

Magnolia grandiflora

Liriodendron tulipifera

Pinus eldarica

Pistacia chinensis

Botanical Name	**Common Name**	Entries	Main Road Streetscape	Residential Streetscape/ Front Yards	Neighborhood Parks	School	Mixed Used Business Park	100' Conservation Easement
*Laurus nobilis**	Sweet Bay				●	●	●	
Liquidambar styraciflua 'Rotundiloba'	Rotundiloba Sweet Gum		●		●	●	●	
Liriodendron tulipifera	Tulip Tree	●	●	●	●	●	●	
Lophostemon confertus	Brisbane Box	●	●	●	●	●	●	
Magnolia spp.	Magnolia					●	●	
Nyssa sylvatica	Sour Gum			●	●	●	●	
*Olea europaea 'Swan Hill'**	Swan Hill Olive			●	●	●	●	
*Olea europaea 'Wilsoni'**	Wilson Fruitless Olive			●	●	●	●	
*Pinus canariensis**	Canary Island Pine	●	●		●	●	●	
*Pinus edulis**	Pinon Pine	●	●		●	●	●	
*Pinus eldarica**	Afghan Pine	●	●		●	●	●	
Pinus flexilis	Limber Pine	●	●		●	●	●	
*Pinus halepensis**	Allepo Pine	●	●		●	●	●	
*Pinus mugo mugo**	Mugho Pine	●	●		●	●	●	
Pinus nigra	Austrian Black Pine	●	●		●	●	●	
*Pinus sabiniana**	Foothill Pine	●	●		●	●	●	
Pinus sylvestris	Scotch Pine	●	●		●	●	●	
Pinus thunbergii	Japanese Black Pine	●	●		●	●	●	
*Pistacia chinensis 'Keith Davey'**	Chinese Pistache	●	●	●	●	●	●	
Platanus X acerifolia	London Planetree	●	●	●	●	●	●	
Platanus X acerifolia 'Yarwood'	Yarwood Planetree	●	●	●	●	●	●	
Platanus X acerifolia 'Bloodgood'	Bloodgood London Planetree	●	●	●	●	●	●	
Podocarpus gracilior	Fern Pine			●	●	●	●	
Podocarpus henkelii	Long-leafed Yellowwood				●	●	●	
Podocarpus macrophyllus	Yew Pine				●	●	●	
Populus fremontii	Fremont or Western Cottonwood				●			.
Populus nigra 'Italica'	Lombardy Poplar				●			
Pyrus calleryana 'Aristocrat'	Aristocrat Flowering Pear	●			●	●	●	
Pyrus calleryana 'Chanticleer'	Chanticleer Flowering Pear	●			●	●	●	
Pyrus calleryana 'Redspire'	Redspire Flowering Pear	●			●	●	●	
Pyrus kawakamii	Evergreen Pear			●	●	●	●	

*Indicates drought-tolerant species
**Indicates that designer must select a low water or drought-tolerant variety only
***Indicates that designer must select a zone-appropriate species

Rhus lancea

Ulmus parvifolia

Zelkova serrata

Chamaerops humilis

Botanical Name	**Common Name**	Entries	Main Road Streetscape	Residential Streetscape/ Front Yards	Neighborhood Parks	School	Mixed Used Business Park	100'Conservation Easement
*Quercus agrifolia**	Coast Live Oak							●
Quercus coccinea	Scarlet Oak			●	●	●	●	
*Quercus ilex**	Holly Oak	●	●	●	●	●	●●	
*Quercus lobata**	Valley Oak				●	●		●
Quercus palustris	Pin Oak		●	●	●	●	●	
Quercus rubra	Red Oak	●	●	●	●	●	●	
*Quercus suber**	Cork Oak	●	●	●	●	●	●	
Quercus virginiana	Southern Live Oak	●	●	●	●	●		
*Quercus wislizenii**	Interior Live Oak	●	●		●	●		
*Rhus lancea**	African Sumac	●	●	●	●	●	●	
Sapium sebiferum	Chinese Tallow Tree			●	●	●	●	
Sequoia sempervirens	Coast Redwood				●			
Ulmus parvifolia var.	Chinese or Evergreen Elm			●	●	●	●	
Ulmus sp. 'Frontier'	Frontier Elm		●	●	●	●	●	
Ulmus sp. 'Homestead'	Homestead Elm		●	●	●	●	●	
Ulmus sp. 'Liberty'	Liberty Elm		●	●	●	●	●	
*Ulmus sp.'Prospector'**	Prospector Elm		●	●	●	●	●	
Umbellularia californica	California Bay			●	●	●	●	
Zelkova serrata	Sawleaf Zelkova		●	●	●	●	●	
Zelkova serrata 'Green Vase'	Green Vase Zelokova		●	●	●	●	●	
Zelkova serrata 'Village Green'	Village Green Zelkova		●	●	●	●	●	
PALMS (not allowed on any city or city maintained property)								
*Butia capitata**	Pindo Palm				●	●	●	
*Chamaerops humilis**	Mediterranean Fan Palm			●	●	●	●	
Cycas revoluta	Sago Palm			●	●	●	●	
*Phoenix dactylifera**	Edible Date Palm				●		●	
Washingtonia filfera	California Fan Palm			●	●	●	●	
Washingtonia robusta	Mexican Fan Palm			●	●	●	●	

*Indicates drought-tolerant species
**Indicates that designer must select a low water or drought-tolerant variety only
***Indicates that designer must select a zone-appropriate species

Abelia x grandifolia

Acanthus mollis

Buddleja davidii

Dendromecon harfordii

Botanical Name	**Common Name**	Entries	Main Road Streetscape	Residential Streetscape/ Front Yards	Neighborhood Parks	School	Mixed Used Business Park	100'Conservation Easement
SHRUBS								
Abelia X grandiflora	Glossy Abelia			●	●	●	●	
*Acacia spp.**,****	Acacia			●	●	●	●	
Acanthus mollis	Bear's Breech	●		●	●	●	●	
Agapanthus spp.	Lily of the Nile	●	●	●	●	●	●	
*Arctostaphylos spp.***	Manzanita	●	●	●	●	●	●	
Artemisia 'Powis Castle'	Powis Castle Wormwood	●	●	●	●	●	●	
Aucuba japonica	Japanese Aucuba	●	●	●	●	●	●	
*Azalea spp.****	Azalea	●		●		●	●	
*Baccharis 'Centennial'**	Centennial Coyote Brush	●	●	●	●	●	●	
*Bambusa multiplex 'Alphonse Karr'**	Alphonse Karr Bamboo	●	●	●	●	●	●	
Berberis thunbergii var.	Japanese Barberry	●	●	●	●	●	●	
Buddleia davidii	Butterfly Bush	●	●	●	●	●	●	
Buxus microphylla japonica	Boxwood	●	●	●	●	●	●	
*Callistemon 'Little John'**	NCN	●	●	●	●	●	●	
Camellia spp.	Camellia	●	●	●	●	●	●	
*Ceanothus spp.***	Lilac	●	●	●	●	●	●	
*Cistus spp.**	Rockrose	●	●	●	●	●	●	
Coleonema pulchellum var.	Breath of Heaven	●	●	●	●	●	●	
*Convolvulus cneorum**	Bush Morning Glory	●	●	●	●	●	●	
*Coprosma x 'kirkii'**	Creeping Coprosma	●	●	●	●	●	●	
Cordyline australis var.	Australian Dracaena	●	●	●	●	●	●	
*Cotinus coggygria**	Smoke Tree	●	●	●	●	●	●	
*Dendromecon harfordii**	Island Bush Poppy	●	●	●	●	●	●	
*Dietes bicolor**	Fortnight Lily	●	●	●	●	●	●	
*Dietes vegeta**	African Iris	●	●	●	●	●	●	
*Dodonaea viscosa 'Purpurea'**	Purple Hopseed Bush	●	●	●	●	●	●	
*Eleagnus pungens**	Silverberry	●	●	●	●	●	●	
*Epilobium canum**	California Fuschia	●	●	●	●	●	●	
*Erigeron karvinskianus**	Santa Barbara Daisy	●	●	●	●	●	●	
*Euonymus japonicus var.**	Euonymus	●	●	●	●	●	●	

*Indicates drought-tolerant species
**Indicates that designer must select a low water or drought-tolerant variety only
***Indicates that designer must select a zone-appropriate species

Dodonaea viscosa 'Purpurea'

Hydrangea macrophylla

Lantana camara

Lobelia laxiflora

Botanical Name	**Common Name**	Entries	Main Road Streetscape	Residential Streetscape/ Front Yards	Neighborhood Parks	School	Mixed Used Business Park	100'Conservation Easement
x Fatshedera lizei	Botanical Wonder	●	●	●	●	●	●	
Fatsia japonica	Japanese Aralia	●	●	●	●	●	●	
*Feijoa sellowiana**	Pineapple Guava, Feijoa	●	●	●	●	●	●	
Gaura lindheimeri	Gaura	●	●	●	●	●	●	
Grevillea spp., ***	Grevillea	●	●	●	●	●	●	
Grewia occidentalis	Lavender Starflower	●	●	●	●	●	●	
*Hemerocallis spp.***	Daylily	●	●	●	●	●	●	
*Heteromeles arbutifolia**	Toyon	●	●	●	●	●	●	
Hydrangea spp.	Hydrangea	●	●	●	●	●	●	
Hypericum calycinum	Creeping St. Johnswort, Goldflower	●	●	●	●	●	●	
Ilex spp.	Holly				●		●	
*Juniperus spp.**	Juniper	●	●	●	●	●	●	
*Lantana spp.***	Lantana	●	●	●	●	●	●	
*Lavandula spp.**	Lavender	●	●	●	●	●	●	
Liriope muscari	Big Blue Lily Turf	●	●	●	●	●	●	
*Lobelia laxiflora**	Red Mexican Lobelia	●	●	●	●	●		
Mahonia 'Golden Abundance'	Golden Abundance Mahonia	●	●	●	●	●	●	
Mahonia aquifolium	Oregon Grape	●	●	●	●	●	●	
*Mimulus aurantiacus**	Sticky Monkey Flower				●			
Myoporum laetum	Myoporum	●	●	●	●	●	●	
*Myrsine africana**	African Boxwood	●	●	●	●	●	●	
*Myrtus communis var.**	Myrtle	●	●	●	●	●	●	
Nandina domestica var.	Nandina, Heavenly Bamboo	●	●	●	●	●	●	
Osmanthus fragrans	Sweet Olive	●	●	●	●	●	●	
*Pelargonium x hortorum**	Garden Geranium	●	●	●	●	●	●	
*Penstemon spp.****	Penstemon				●			
*Phormium spp.***	Flax	●	●	●	●	●	●	
Photinia x fraseri	Fraser's Photinia	●	●	●			●	
*Phyllostachys viridis 'Robert Young'**	Robert Young Bamboo	●			●	●	●	
*Pittosporum spp.****	Pittosporum	●	●	●	●	●	●	
*Pyracantha coccinea var.**	Pyracantha	●	●	●	●	●	●	

*Indicates drought-tolerant species
**Indicates that designer must select a low water or drought-tolerant variety only
***Indicates that designer must select a zone-appropriate species

Penstemon spectabilis

Pyracantha coccinea

Romneya coulteri

Salvia leucantha

Botanical Name	**Common Name**	Entries	Main Road Streetscape	Residential Streetscape/ Front Yards	Neighborhood Parks	School	Mixed Used Business Park	100'Conservation Easement
*Rhamnus californica var.**	California Coffeeberry				●			
Rhaphiolepis spp.	Indian Hawthorne	●	●	●	●	●	●	
*Rhus ovata**	Sugar Bush	●	●	●	●	●	●	
*Romneya coulteri**	Matilija Poppy				●			
Rosa spp.	Rose	●	●	●	●	●	●	
*Rosmarinus spp.**	Rosemary	●	●	●	●	●	●	
*Salvia spp.**, ***	Sage	●	●	●	●	●	●	
*Sambucus mexicana **	Mexican Elderberry							●
*Santolina chamaecyparissus**	Lavender Cotton			●	●	●	●	
*Sisyrinchium bellum**	Blue-eyed Grass	●	●	●	●	●	●	●
Spiraea spp.		●	●	●	●	●	●	
Viburnum spp.	Viburnum	●	●	●	●	●	●	
*Westringia spp.**	Coast Rosemary	●	●	●	●	●	●	
*Xylosma congestum**	Xylosma, Glossy Xylosma	●	●	●	●	●	●	
*Yucca spp.***	Yucca	●	●	●	●		●	
SUCCULENTS (not allowed on any city or city maintained property)								
*Agave parryi**	Artichoke Agave	●	●	●	●	●	●	
*Aloe spp.***	Aloe	●	●	●	●	●	●	
*Bulbine frutescens**	Yellow Stalked Bulbine	●	●	●	●	●	●	
*Bulbine frutescens 'Hallmark'**	Orange Hallmark Bulbine	●	●	●	●	●	●	
*Bulbine frutescens 'Yellow'**	Yellow Bulbine	●	●	●	●	●	●	
*Cephalophyllum 'Red Spike'**	Red Spike Iceplant	●	●	●	●	●	●	
*Echeveria spp.**	Hen and Chicks	●	●	●	●	●	●	
*Euphorbia rigida**	Blue Euphorbia	●	●	●	●	●	●	
*Ferocactus wislizenii**	Fish Hook Barrel Cactus	●	●	●	●	●	●	
*Hesperaloe parviflora var.**	Hesperaloe	●	●	●	●	●	●	
Opuntia spp., ***	Prickly Pear	●	●	●	●		●	
*Portulacaria afra**	Elephant's Food, Elephant Bush	●	●	●	●	●	●	
*Sedum spp.**	Sedum	●	●	●	●	●	●	
Yucca spp.	Yucca	●	●	●	●		●	

*Indicates drought-tolerant species
**Indicates that designer must select a low water or drought-tolerant variety only
***Indicates that designer must select a zone-appropriate species

Echeveria x imbricata

Sedum rubrotinctum

Achellia millefolium

Ceanothus 'Centennial'

Botanical Name	**Common Name**	Entries	Main Road Streetscape	Residential Streetscape/ Front Yards	Neighborhood Parks	School	Mixed Used Business Park	100'Conservation Easement
GROUNDCOVER								
*Acacia redolens var.**	Spreading Acacia			●		●	●	
*Achillea spp.***	Yarrow	●	●	●	●	●	●	
Armeria maritima	Sea Pink	●	●	●	●	●	●	
Bergenia cordifolia	Heartleaf Bergenia	●	●	●	●	●	●	
Campanula muralis	Dalmatian Bellflower	●	●	●	●	●	●	
Campanula poscharskyana	Serbian Bellflower	●	●	●	●	●	●	
*Ceanothus griseus var.**	Carmel Creeper	●	●	●	●	●	●	
Cerastium tomentosum	Snow-in-Summer	●	●	●	●	●	●	
*Convolvulus mauritanicus**	Ground Morning Glory	●	●	●	●	●	●	
*Coprosma petrei**	Creeping Mirror Plant	●	●	●	●	●	●	
Festuca californica 'Serpentine Blue'	California Fescue selection	●	●	●	●	●	●	
*Festuca glauca**	Blue Fescue	●	●	●	●	●	●	
Fragaria chiloensis	Ornamental Strawberry	●	●	●	●	●	●	
Fragaria 'Pink Panda'	Pink Panda Ornamental Strawberry	●	●	●	●	●	●	
Gazania hybrids	Hybrid Gazanias	●	●	●	●	●	●	
Hedera helix	English Ivy	●	●	●	●	●	●	
*Heuchera spp.***	Coral Bells	●	●	●	●	●	●	
Hypericum calycinum	Creeping St. John's Wort	●	●	●	●	●	●	
*Juniperus chinensis 'Parsonii'**	Parson's Juniper	●	●	●	●	●	●	
Lonicera japonica 'Halliana'	Hall's Honeysuckle	●	●	●	●	●	●	
*Myoporum parvifolium**	Ground Cover Myoporum	●	●	●	●	●	●	
Ophiopogon spp.	Mondo Grass	●	●	●	●	●	●	
*Osteospermum spp.**	Freeway Daisy	●	●	●	●	●	●	
Rosa Ground Cover varieties	Ground Cover Rose	●	●	●	●	●	●	
*Stachys byzantina**	Lamb's Ears	●	●	●	●	●	●	
Thymus spp.	Thyme	●	●	●	●	●	●	
Trachelospermum asiaticum	Yellow Star Jasmine	●	●	●	●	●	●	
Trachelospermum jasminoides	Star Jasmine	●	●	●	●	●	●	
*Verbena spp.***	Verbena	●	●	●	●	●	●	
*Vinca minor**	Dwarf Periwinkle	●	●	●	●	●	●	

*Indicates drought-tolerant species
**Indicates that designer must select a low water or drought-tolerant variety only
***Indicates that designer must select a zone-appropriate species

Clytostoma callistegiodes

Gelsemium sempervirens

Jasminum polyanthum

Aristida purpurea

Botanical Name	**Common Name**	Entries	Main Road Streetscape	Residential Streetscape/ Front Yards	Neighborhood Parks	School	Mixed Used Business Park	100'Conservation Easement
*Zoysia tenuifolia**	Korean Grass	●	●	●	●	●	●	
VINES								
Clematis armandii	Evergreen Clematis	●	●	●	●	●	●	
Clematis cultivars	Clematis	●	●	●	●	●	●	
Clytostoma callistegioides	Violet Trumpet Vine	●	●	●	●	●	●	
Distictus buccinatoria	Scarlet Trumpet Vine	●	●	●	●	●	●	
*Gelsemium sempervirens**	Carolina Jessamine	●	●	●	●	●	●	
Hardenbergia violacea	Lilac Vine, Coral Pea	●	●	●	●	●	●	
Hardenbergia violacea 'Rosea'	Pink Lilac Vine	●	●	●	●	●	●	
Hedera helix	English Ivy	●	●	●	●	●	●	
Jasminum polyanthum	Pink Jasmine	●	●	●	●	●	●	
Parthenocissus quinquefolia	Virginia Creeper	●	●	●	●	●	●	
Parthenocissus tricuspidata	Boston Ivy	●	●	●	●	●	●	
Passiflora spp.	Passion Vine	●	●	●	●	●	●	
*Rosa 'Cecile Brunner'**	Cecile Brunner Rose (polyantha)	●	●	●	●	●	●	
*Rosa banksiae 'Alba Plena'**	Dbl. White Lady Banks' Rose	●	●	●	●	●	●	
*Rosa banksiae 'Lutea'**	Yellow Lady Banks' Rose	●	●	●	●	●	●	
Solanum jasminoides	Potato Vine	●	●	●	●	●	●	
Trachelospermum jasminoides	Star Jasmine	●	●	●	●	●	●	
GRASSES								
*Aristida purpurea**	Purple Three Awn Grass	●	●	●	●	●	●	
*Bouteloua curtipendula**	Sideoats Grama Grass	●	●	●	●	●	●	
*Bouteloua gracilis**	Blue Grama Grass	●	●	●	●	●	●	
*Calamagrotis x acutifolia**	Feather Reed Grass	●	●	●	●	●	●	
Calamagrotis foliosus	Mendecino Reed Grass	●	●	●	●	●	●	
Calamagrotis nutkaensis	Pacific Reed Grass	●	●	●	●	●	●	
*Carex elata 'Aurea'**	Golden Variegated Sedge	●	●	●	●	●	●	
Carex flagellifera	Weeping Brown Sedge	●	●	●	●	●	●	
*Carex oshimensis 'Evergold'**	Variegated Japanese Sedge	●	●	●	●	●	●	
Carex pansa	California Meadow Sedge	●	●	●	●	●	●	
Carex praegracilis	Clustered Field Sedge	●	●	●	●	●	●	

*Indicates drought-tolerant species
**Indicates that designer must select a low water or drought-tolerant variety only
***Indicates that designer must select a zone-appropriate species

Carex pansa

Miscanthus sinensis

Muhlenbergia rigens

Nassella tenuissima

Botanical Name	**Common Name**	Entries	Main Road Streetscape	Residential Streetscape/ Front Yards	Neighborhood Parks	School	Mixed Used Business Park	100'Conservation Easement
Carex stricta	Tussock Sedge	●	●	●	●	●	●	
Carex testacea	Brown Sedge	●	●	●	●	●	●	
Festuca californica 'Serpentine Blue'	California Fescue selection	●	●	●	●	●	●	
*Festuca glauca**	Blue Fescue	●	●	●	●	●	●	
*Festuca idahoensis 'Siskyou Blue'**	Siskyou Blue Fescue	●	●	●	●	●	●	
*Festuca mairei**	Atlas Fescue	●	●	●	●	●	●	
Festuca rubra	Red Fescue	●	●	●	●	●	●	
*Helictotrichon sempervirens**	Blue Oat Grass	●	●	●	●	●	●	
Juncus effusus pacificus 'Quartz Creek'	Quartz Creek Soft Rush	●	●	●	●	●	●	
Leymus arenaris	Blue Lyme Grass	●	●	●	●	●	●	
*Leymus condensatus**	Wild Rye	●	●	●	●	●	●	
*Leymus condensatus 'Canyon Prince'**	Canyon Prince Wild Rye	●	●	●	●	●	●	
*Leymus triticoides**	Creeping Wild Rye	●	●	●	●	●	●	
Miscanthus spp.	Miscanthus	●	●	●	●	●	●	
Muhlenbergia spp.	Muhlenbergia	●	●	●	●	●	●	
*Nassella pulchra**	Needle Grass	●	●	●	●	●	●	
*Nassella tenuissima**	Mexican Feather Grass	●	●	●	●	●	●	
*Nolina bigelovii**	Desert Bigelov Nolina	●	●	●	●	●	●	
*Pennisetum alopecuroides 'Little Bunny'**	Little Bunny Fountain Grass	●	●	●	●	●	●	
*Zoysia 'De Anza'**	Turf Zoysia De Anza	●	●	●	●	●	●	
Existing Grasses to Protect in Place								●

General Notes:

1. Landscape Developer to take into consideration plant culture requirements (sun/shade, soil, etc.) when designing a final landscape plan for individual neighborhoods
2. Plants used on school site shall be reviewed and approved by the Tracy/Jefferson Unified School District during construction document phase.

*Indicates drought-tolerant species
**Indicates that designer must select a low water or drought-tolerant variety only
***Indicates that designer must select a zone-appropriate species

3.4.16 Landscape Design Guidelines Checklist

This checklist is intended to be used as quick reference of the Landscape Design Guidelines for designers, developers, builders, and City Staff.

COMMUNITY IDENTITY/MONUMENTATION	
Monument Signage	• Community Gateway Icon visible from the freeway. • Major Community Monumentation. • Primary Neighborhood Monumentation - secondary to Community Monumentation, this identifies the individual neighborhoods. • Park Monumentation - park identification. • Trail head marker - sign denotes trail access points.
Materials	• Ledgestone dry - stacked in a Gabion wall fashion. • Corten steel signage. • Rebar cage structure. • Refer to the Landscape Master Tree Plan and Plant Matrix.
STREETSCAPE AND TRAILS	
Trails/Roads	• 16.5’ wide pipeline easement/passive trail • 10’ wide multi-use pedestrian trails on each side of the main Spine Road. • Class 1 bikeway along Corral Hollow Road into the community. • Residential streets with parkways, sidewalk, and landscape lot planting adjacent to perimeter walls.
Materials	• Decomposed granite passive trail. • Concrete and/or asphalt multi-use trails and Class 1 bikeway. • Neighborhood concrete walks. • Permeable concrete or pavers where feasible. • Refer to the Landscape Master Tree Plan and Plant Matrix.
EDGE CONDITIONS	
Easement Areas	• Easement Areas: Interstate 580 and California Aqueduct.
Wall and Fences	• Intermittent 8’ sound wall coupled with 5’ easement fence along Interstate 580. • 6’ CMU block wall coupled with a 5’ easement fence along the California Aqueduct.
Materials	• CMU split face block sound wall and perimeter wall. • Galvanized steel pipe and a ‘No Climb’ metal mesh fence. • Existing grasses to be protected-in-place. • Refer to the Edge Conditions section herein

OPEN SPACE AND PARKS	
Public Parks	• Refer to the Open Space and Parks section for Public Parks 1-3 specifics in Specific Plan Phase 1A.
HOA Village Greens	• Three open space areas/activity nodes in Phase 1A- refer to the Open Space and Parks section.

LIGHTING	
Types	• Single headed main Spine Road light standard. • Single headed light standard for the commercial and industrial use areas. • Single headed light standard for collector and local roads. • Accent lighting at monumentation/signage. • Bollard lights for pathways within the public realm.
SITE FURNITURE	
Types	• CBU decorative Mailboxes • Tables, benches, seat walls, trash receptacles, and bike racks.
Materials	• Corten steel, stone and slate, wood, concrete, and concrete pavers. • Powdered coated metal to resemble corten steel coloring.
WALL AND FENCE	
Types	• Perimeter walls/community walls and sound walls. • Easement/protection fencing and view fencing. • Refer to the Wall and Fence section herein for general detailing.
Materials	• CMU split face block and Simtek fencing community walls. • Galvanized steel pipe and a 'No Climb' metal mesh fence and tube steel fencing. • Some listed above with alternate bid specifications for flexibility.
TREE PLAN AND PLANTS	
Matrix	• Refer to the Landscape Master Tree Plan and Plant Matrix.
GENERAL	
Landscape Irrigation	• Refer to the Sustainable Guidelines herein for water-wise irrigation practices.
Utility and Equipment Screening	• All utilities and improvement equipment located above ground shall be sufficiently screened with appropriate plant material keeping in mind required setbacks and access. • Refer to the Landscape Master Tree Plan and Plant Matrix.

Page Intentionally Blank

4 INFRASTRUCTURE AND SERVICES

4.1 GENERAL DESCRIPTION

Throughout the Tracy Hills Specific Plan area, significant infrastructure improvements will be built to support the development of the Specific Plan. These infrastructure improvements will include streets and other types of circulation, water, sewer, storm drainage, electricity, natural gas, telephone, and cable TV. Public services will also be provided for the Tracy Hills residents that will include fire and police protection, solid waste disposal, and schools. Citywide Master Plans have been adopted for traffic improvements, sewer collection and treatment, and potable and recycled water distribution. A separate storm water master plan was developed specifically for the Tracy Hills Specific Plan.

4.2 ROADWAY SYSTEM

4.2.1 Roadway System Concept

The Tracy Hills Specific Plan provides for a comprehensive roadway system that includes streets, bikeways, and walks designed to provide and encourage efficient travel within the community.

The roadway system is also intended to enhance the character and identity of the Specific Plan area by specifying right-of-way landscaping requirements. Lammers Road, the backbone of the internal circulation system, connects residential neighborhoods to community facilities, schools, and commercial areas, as well as points of regional circulation. Bikeways and walks provide a non-vehicular travel alternative for the convenience of walkers, joggers, and bicyclists.

Although automobiles will remain the primary transportation mode for most Tracy Hills residents in the foreseeable future, the comprehensive circulation system in the Specific Plan is designed to provide a range of transportation options for the efficient movement of people. The circulation system incorporates public streets, pedestrian paths, bikeways, parking areas, and public transit stops.

4.2.2 Existing Streets

The existing roadways in the vicinity of the Specific Plan area have been constructed to meet rural design standards. Typically, existing roadways do not include curb, gutter, and sidewalks or sufficient pavement width for on-street parking. The existing road network around the Specific Plan area includes the following:

- Interstate 580
- Corral Hollow Road
- Lammers Road (dead ends at north side of the Specific Plan area)

Interstate 580 is a four-lane, limited-access interstate highway that bisects the Specific Plan area. Interstate 580 connects to I-205 and the western extension of I-580 to the north and to I-5 to the south.

Corral Hollow Road is a two-lane road located along the eastern boundary of the Specific Plan area. Corral Hollow Road is designated a major arterial in the City of Tracy Transportation Master Plan and links Interstate 580 to the western side of the Tracy central core.

Lammers Road is currently a two-lane road that extends south from Byron Road and dead ends at the Union Pacific Railroad line. Lammers Road is proposed to be an expressway and future I-580 connection in the City of Tracy Transportation Master Plan.

4.2.3 Planned Streets – Specific Plan Circulation

Streets are designed in accordance with the Transportation Master Plan. A variety of street widths and designs are contained within the Specific Plan area to accommodate the range of anticipated traffic volumes (see **Figure 4-1, Roadway Plan**).

Graphic sections of each typical street design are provided. With the exception of street extensions, street names have not been designated. All public street cross-sections are included in **Figure 4-2, Four Lane Parkway; Figure 4-3, Two Lane Collector; Figure 4-4, Two Lane Major Collector; Figure 4-5, Spine Road / Lammers Extension; Figure 4-6, Four Lane Major Arterial with Median;** and **Figure 4-7, Residential Streets.** The locations and designs of intersections shall meet the standards of the City of Tracy at the time they are designed and submitted for approval by the City.

Consistent with the Transportation Master Plan, the Specific Plan provides for one north/south expressway, one north/south arterial street, and one east/west arterial, all of which are an important part of the City's overall vehicular transit system. The two north/south roads are Lammers Road and Corral Hollow Road. The east/west arterial is parallel to Interstate 580 between Lammers Road and Corral Hollow Road. Lammers Road extends south from I-205 through the City's western area and eventually connects to Corral Hollow Road. The Lammers Road extension will be a four-lane arterial and south of I-580, will transition to a two lane divided arterial through the plan area. Lammers Road is aligned between the Delta-Mendota Canal and Corral Hollow Road, through the Specific Plan area. The segment of Lammers Road between I-580 and Corral Hollow Road is called South Tracy Hills Road will provide direct access to major community facilities as well as provide a central community interchange and access to Interstate 580.

The City of Tracy Transportation Master Plan envisions Lammers Road as an expressway which will extend from I-580 north to I-205, connecting the Tracy Hills and Ellis Projects with the job-generating centers of Cordes Ranch and Gateway and providing direct access onto I-580.

Corral Hollow Road will be expanded into a four-lane arterial. This road will be the access point for the initial development of Tracy Hills.

Typical residential streets will have paved sections as shown on **Figure 4-7, Residential Streets**. Residential streets may be constructed with sidewalks on only one side when fronted with homes on only one side.

The residential collector and minor arterials system intersects Lammers Road at designated locations. The residential collector and minor arterials system shall provide direct access to schools and parks, wherever possible. Residential driveways predominantly face onto local streets. No residential driveways are proposed to face onto or directly access Lammers Road, Corral Hollow Road, or other arterial roads.

An additional system of internal streets will also serve the Mixed Use Business Park and Light Industrial areas. All office and industrial parcels will have defined entries from these streets and will be landscaped according to Chapter 3, Design Guidelines.

The four-lane arterial parallel to and north of the California Aqueduct will be a designated truck route to facilitate efficient movement with minimum impacts (refer to **Figure 4-1, Roadway Plan)**. Truck routes will insulate residential areas from excessive truck traffic to the extent possible except for local deliveries.

Private streets may be considered within Tracy Hills. Private streets may be constructed with sidewalks on one side when fronted with homes on only one side, as proposed by the developer. Private street sections shall be designed in accordance with City Standards or as prescribed by the City Engineer.

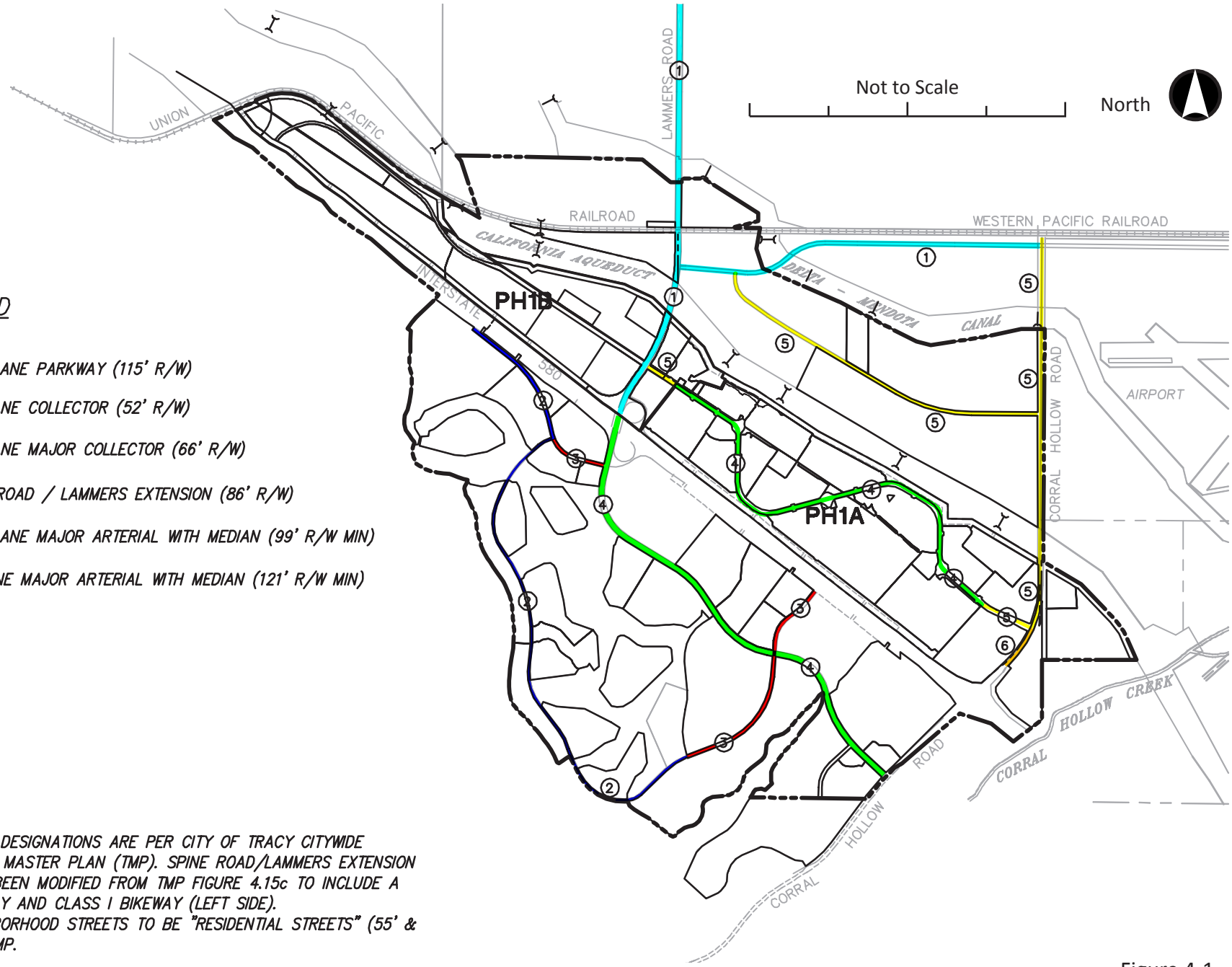

LEGEND

1. FOUR LANE PARKWAY (115' R/W)
2. TWO LANE COLLECTOR (52' R/W)
3. TWO LANE MAJOR COLLECTOR (66' R/W)
4. SPINE ROAD / LAMMERS EXTENSION (86' R/W)
5. FOUR LANE MAJOR ARTERIAL WITH MEDIAN (99' R/W MIN)
6. SIX LANE MAJOR ARTERIAL WITH MEDIAN (121' R/W MIN)

NOTES:

1. STREET SECTION DESIGNATIONS ARE PER CITY OF TRACY CITYWIDE TRANSPORTATION MASTER PLAN (TMP). SPINE ROAD/LAMMERS EXTENSION (86' R/W) HAS BEEN MODIFIED FROM TMP FIGURE 4.15c TO INCLUDE A WIDENED PARKWAY AND CLASS I BIKEWAY (LEFT SIDE).
2. INTERNAL NEIGHBORHOOD STREETS TO BE "RESIDENTIAL STREETS" (55' & 57' R/W) PER TMP.

Figure 4-1
Roadway Plan

TRACY HILLS
Specific Plan

Page Intentionally Blank

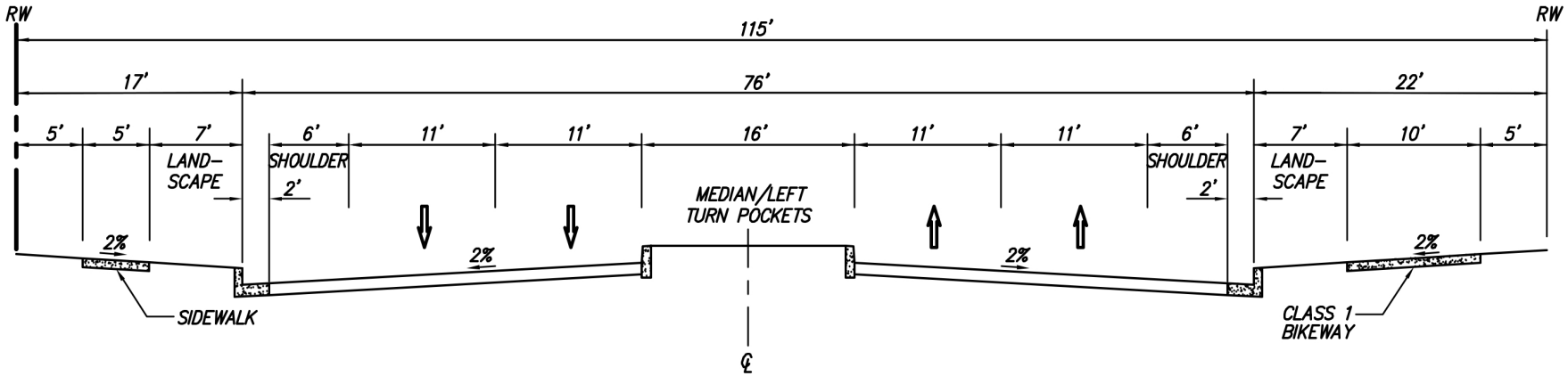

1 FOUR LANE PARKWAY

(EXPRESSWAY)

N.T.S.

NOTE:
SECTION TAKEN FROM FIGURE 4.15a OF
CITY OF TRACY TRANSPORTATION MASTER PLAN

Figure 4-2
Four Lane Parkway

Page Intentionally Blank

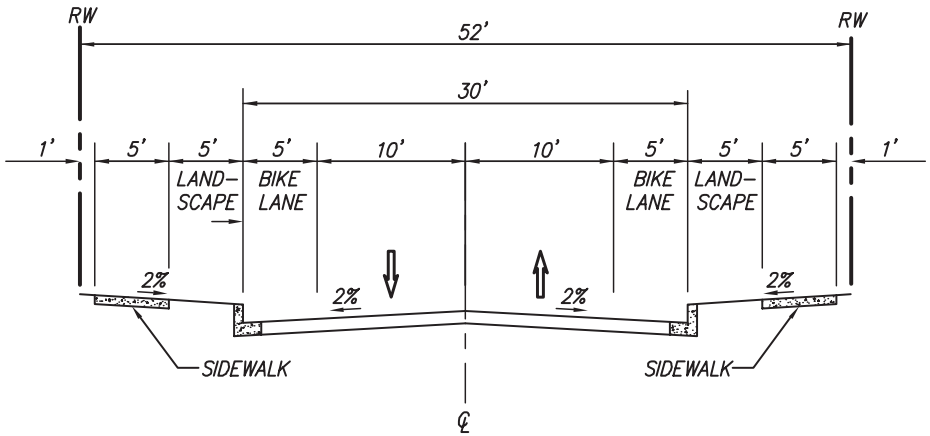

2 TWO LANE COLLECTOR
(2000 VEHICLES PER DAY

NO SCALE

NOTE:
SECTION TAKEN FROM FIGURE 4.15d OF
CITY OF TRACY TRANSPORTATION MASTER PLAN

Figure 4-3
Two Lane Collector

Page Intentionally Blank

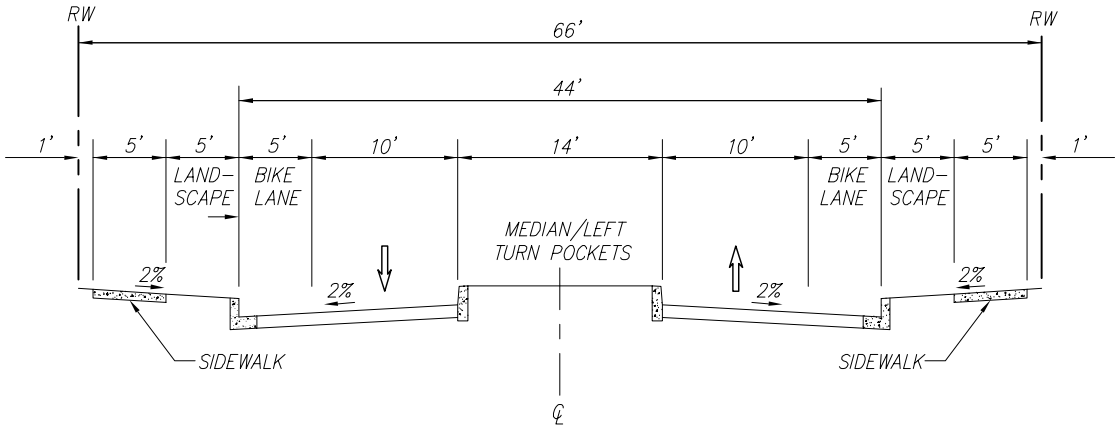

3

TWO LANE MAJOR COLLECTOR
2000 TO 5000 VEHICLES PER DAY

NO SCALE

NOTE:
SECTION TAKEN FROM FIGURE 4.15d OF
CITY OF TRACY TRANSPORTATION MASTER PLAN

Figure 4-4
Two Lane Major Collector

Page Intentionally Blank

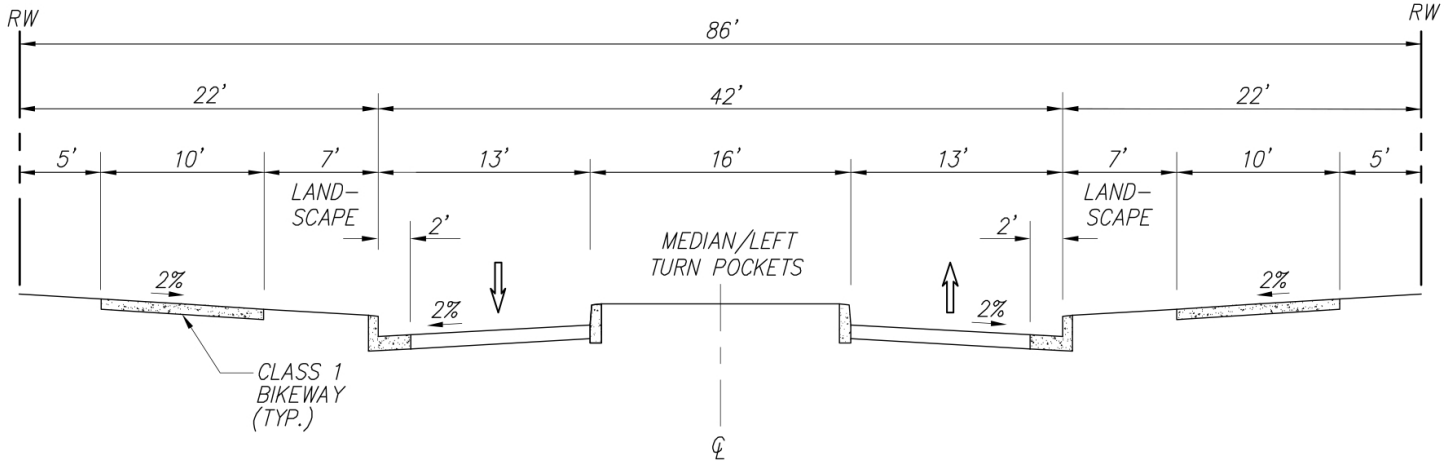

4 SPINE ROAD / LAMMERS EXTENSION

NO SCALE

NOTES:

1. SECTION TAKEN FROM FIGURE 4.15c OF CITY OF TRACY TRANSPORTATION MASTER PLAN – MODIFIED TO INCLUDE WIDENED PARKWAY & CLASS I BIKEWAY (LEFT SIDE)
2. ROAD WIDENS BETWEEN CORRAL HOLLOW ROAD AND THE FIRST ROUNDABOUT TO THE WEST.

Figure 4-5
Spine Road / Lammers Extension

Page Intentionally Blank

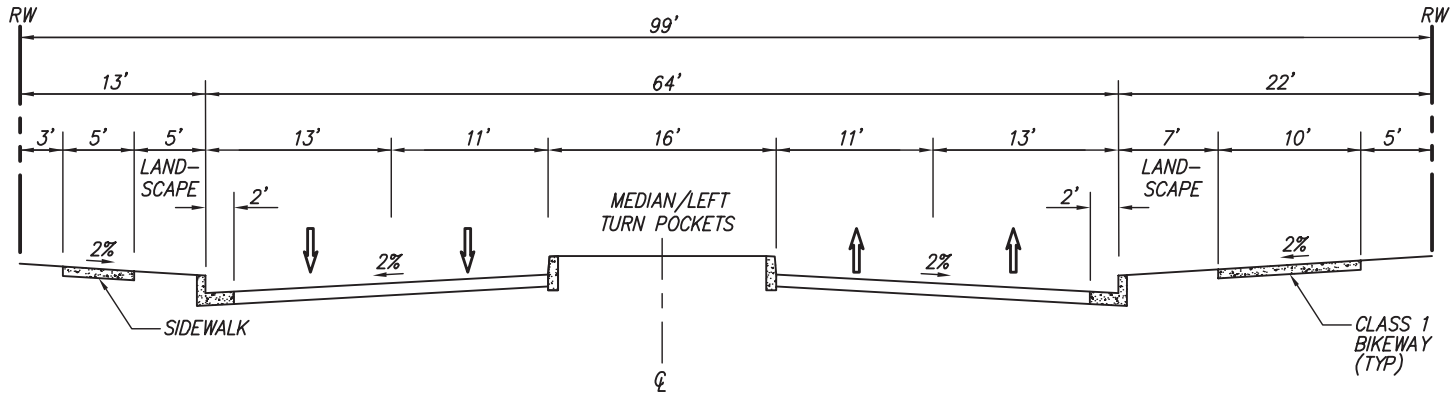

5 FOUR LANE MAJOR ARTERIAL WITH MEDIAN

(NO SCALE)

NOTE:
SECTION TAKEN FROM FIGURE 4.15b OF
CITY OF TRACY TRANSPORTATION MASTER PLAN

Figure 4-6
Four Lane Major Arterial with Median

Page Intentionally Blank

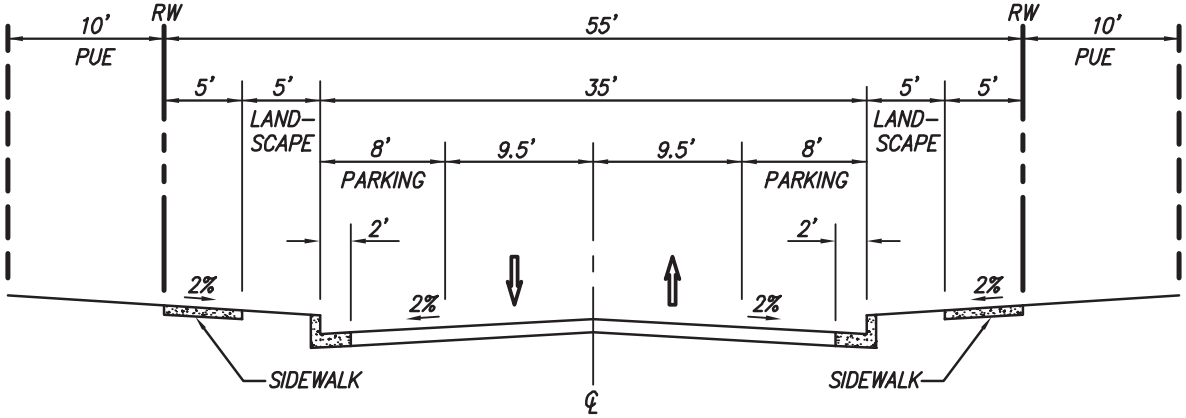

RESIDENTIAL STREET
MAXIMUM BLOCK LENGTH OF 500 FEET
NO SCALE

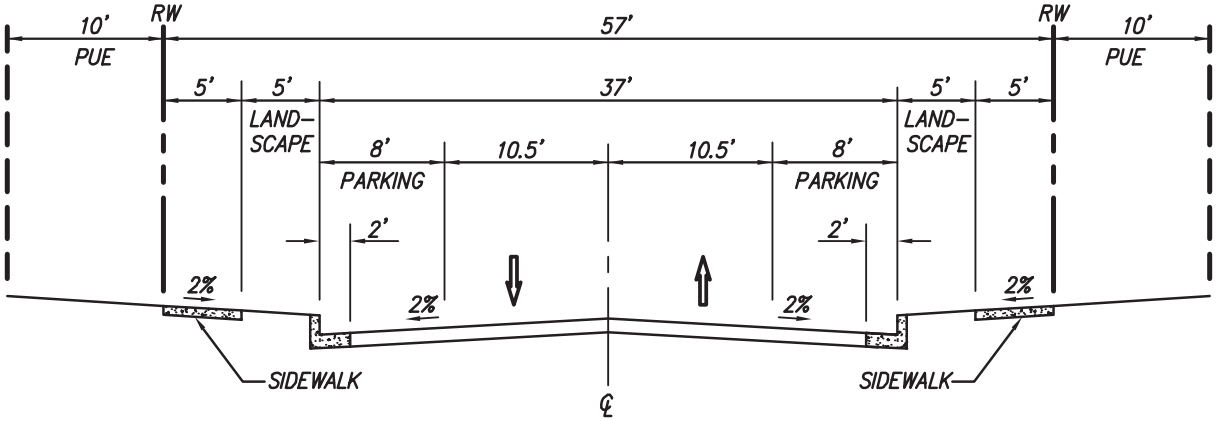

RESIDENTIAL STREET
NO SCALE

NOTE:
SECTIONS TAKEN FROM FIGURE 4.15e OF
CITY OF TRACY TRANSPORTATION MASTER PLAN

Figure 4-7
Residential Streets

Page Intentionally Blank

4.2.4 Pedestrian and Bicycle Circulation

Tracy Hills provides a network of bikeways and trails throughout the Specific Plan area. These trails may be multi-use, bike and pedestrian travel ways. These trails may be separated from the vehicular roadway and will allow access between neighborhoods.

Chapter 3, Tracy Hills Design Guidelines, provide bikeway and trails concepts. A pedestrian/bike circulation plan identifying circulation patterns, street crossings, access between neighborhoods, and walkways shall be prepared with each Tentative Map.

Class 1 bikeways are to be located on Lammers Road from the Delta-Mendota Canal crossing south to the intersection with Corral Hollow. Class 1 bikeways will also be provided on Corral Hollow Road from the Delta-Mendota Canal south and west to the Lammers Road intersection. Additional Class 1 bikeways will be provided on the primary east/west streets that intersect Lammers Road and parallel Interstate 580. No marked bike lanes will be provided on residential streets and non-arterial streets (see **Figure 4-7, Residential Streets**). Combination pedestrian/bike paths shall be a minimum of 10 feet wide.

Sidewalks may be provided on one side of the street when fronted with homes on only one side. The minimum width of sidewalks shall be 5 feet in residential, industrial, and commercial areas.

The bikeway and trail system will serve schools, commercial areas, and community facilities. The planning and design of the system will avoid conflicts with roadways as much as possible and keep crossings to a minimum.

4.2.5 Public Transportation

There are several public transit options to serve the residents of Tracy Hills, accommodating the needs of a wide variety of users for local and regional travel needs. Regional rail service is provided by the Altamont Corridor Express (ACE) which is a passenger rail line running between Stockton and San Jose, with a Bay Area Rapid Transit (BART) connection to the Bay Area from Pleasanton. Regional bus service is also available within San Joaquin County provided by the San Joaquin Regional Transit District (SJRTD), County Area Transit, the San Joaquin Commuter bus, Greyhound and Amtrak California.

Local bus service is provided by the City's TRACER bus system. TRACER offers Fixed Route and Paratransit services providing local public transportation to most major destinations within Tracy including connecting to other public transportation options such as the City's Transit Station and the ACE station. The TRACER Fixed Route is routinely updated and Tracy Hills will accommodate extension of the Fixed Route system through reservation of bus stop locations and, where appropriate, bus turnarounds. The type, number and location of bus facilities, timing of improvements, and developers responsibilities will be determined at the time of Tentative Map approval.

4.2.6 Roadway Phasing

Road construction will be phased with development.

For example, Corral Hollow Road will be improved with phases of development. This will include reconstructing the failed portions of the road and providing additional paving, curb, and gutter on the west (project) side of the road. Lammers Road will be constructed in segments as development proceeds.

Additional roadway, interchange, and other circulation-related improvements will be constructed as warranted by development in accordance with City standards.

4.2.7 Vehicle Trip Reduction and Travel Demand Management

Tracy Hills will include opportunities to promote and implement trip reduction and travel demand management measures consistent with key goals of City of Tracy Sustainability Plan (SAP), the San Joaquin Council of Governments

(SJCOG) Travel Demand Management Plan, and the San Joaquin Valley Unified Air Pollution Control District (SJVAPCD) Rule 9410. The following site design features, programs and measures designed to reduce vehicle trips, congestion and vehicle miles traveled (VMT) will be implemented in Tracy Hills:

1. Dedication of land for a park and ride lot(s) and/or construction of park and ride improvements near the Corral Hollow Road/I-580 Interchange and/or the future Lammers Road Interchange. Concurrent with any tentative subdivision map or development review application for Phase 2, the location of a park and ride lot shall be identified and dedicated and/or constructed. Design of the park and ride lot(s) shall be approved by the City.
2. Class I and/or II bicycle paths are included on all backbone streets and within 1/2 mile of all land uses within Tracy Hills so that destinations can be reached conveniently by alternatives to motor vehicle trips.
3. All streets include sidewalks on both sides to promote pedestrian access and connectivity between uses except on some of the hillside residential development.
4. The street cross sections in Tracy Hills are consistent with the Tracy Transportation Master Plan by implementing principles of Complete Streets through the development of a circulation system that will address multiple transportation needs including public transit, cycling, pedestrian, and vehicle movement.
5. Tracy Hills will provide an integrated street and trail system that will provide linkages between residential, commercial, and business park uses, parks, schools and open space to promote shorter travel distances and encourage pedestrian and bicycle connectivity.
6. It is anticipated that the City of Tracy will take a phased approach to providing public transportation to Tracy Hills. The City will explore public transportation needs based on construction phasing and will evaluate appropriate routes. As development occurs in Tracy Hills, the City will modify and expand public transportation routes as necessary to efficiently accommodate demand.
7. As part of the application process for individual, specific development projects located along existing and planned transit routes, coordination shall occur with the City of Tracy (TRACER), San Joaquin Regional Transit District and/or other agencies to ensure that bus pads and shelters are incorporated, as necessary.
8. As part of the application process for individual, specific development projects that generate 100 or more employees, employers shall implement an Employer Trip Reduction Implementation Plan (ETRIP) in conformance with the SJVAPCD Rule 9410. As part of the application process for individual, specific development projects, preferential parking space locations shall be provided for electric vehicles and compressed natural gas vehicles in all parking structures and lots. The location of these reserved parking spaces shall be identified on the site plan and submitted to the Director of Development Services for approval.
9. The Developer and business shall work with the SJCOG Commute Connection program to implement employer based transportation demand management strategies to include but not limited to, ridesharing, transit, bicycling/walking, telecommuting, trip planning preferred parking for carpools and event planning.
10. Bicycle parking will be required to be located in easily accessible locations with lighting near building entrances to promote cyclist safety, security, and convenience. Employers should provide facilities that encourage bicycle commuting, including, e.g. locked bicycle storage and/or covered or indoor bicycle parking.

4.3 WATER SUPPLY SYSTEM

4.3.1 Water Demand

Water usage in the City of Tracy has been projected in the Citywide Water System Master Plan. The forecast of water use within the Tracy Hills Specific Plan area is based on water use factors used in the Citywide Water System Master Plan.

Annual water use factors are used in the computation of the total water use, and these include both potable and non-potable water uses. It is assumed that non-potable water (i.e., recycled water) will be used to irrigate schools, parks, professionally maintained landscape in the light industrial and commercial areas, and open space when available.

4.3.2 Sources of Supply

The potable water supply for Tracy Hills will come from a combination of sources including Byron Bethany Irrigation District pre-1914 and Central Valley Project water as well as other City sources.

4.3.3 Distribution and Storage

Distribution facilities will consist of a combination of transmission and distribution facilities constructed during the various phases of the project. The transmission facilities will consist of mains which will connect the City of Tracy Water Treatment Plant with the two or more storage reservoirs located on the project. The transmission mains will supply water to the distribution system, with water from the treatment plant or the storage reservoirs, depending upon the amount and location of the demand. A schematic diagram of the reservoir and pump station locations is shown in **Figure 4-8, Water Distribution System.** Conceptual water tank screening methods are described in Chapter 3, Tracy Hills Design Guidelines. The Citywide Water System Master Plan provides storage and distribution requirements for the Tracy Hills Specific Plan area at buildout. Separate Water Study Technical Memorandums will be prepared in accordance with project phasing to ensure the water system infrastructure is designed to accommodate both interim and buildout conditions.

The distribution system will be designed in accordance with the City of Tracy Design Standards. All public utility mains will be installed in public rights-of-way, unless specifically approved by the City Engineer.

Potable water from the City's distribution system will be pumped uphill into a series of service zones determined by elevation. Pressure zones are delineated so that minimum static residual pressures never fall below 30 pounds per square inch (psi). Maximum system pressures are about 100 psi.

Preliminary storage tank sizes per service zone are included in the Citywide Water System Master Plan. Depending upon phasing, zone storage may be concentrated at a single tank or split into two or more locations. The details of this decision will be determined by project phasing, tank size, site constraints, and the final transmission and distribution main configuration. Storage reservoirs will be designed to contain fire flow plus operational storage in accordance with City standards. See the Citywide Water System Master Plan for detailed system requirements.

As with storage tanks, zone pumping may be divided to reduce the size of individual pump stations, provide system redundancy, and accommodate phasing in an efficient manner. Each pump station will have one pump in reserve and be equipped with standby power.

Multiple pressure zones may be served from the same tank, with pressure reducing valves used to reduce system pressure where necessary. Pressure zone boundary delineation will depend upon street layout and the availability of utility easements and may change during later stages of planning. Connections between zones through pressure reducing valves can provide a measure of system reliability should it become necessary to feed lower zones from above in the event of a fire or other emergency.

4.3.4 Level of Service and Timing Standard

The City's target for level of service for the water supply system is to provide water in sufficient quantity and at a pressure consistent with the Citywide Water System Master Plan. Forty psi will be maintained for peak hour and 30 psi for maximum day plus fire flow demands. Interim facility pressures may not be allowed to fall below this minimum.

4.3.5 Water Supply System Phasing

Water facility needs for the ultimate buildout of the project include an expansion and upgrade of the City of Tracy storage and pumping facilities, transmission, and distribution facilities, and use of Byron Bethany Irrigation District (BBID) water conveyed via the Delta-Mendota Canal.

Water storage and distribution facilities will be constructed in phases as required to meet the water demand of the project. The first phase of the project will involve construction of new transmission/distribution facilities. First phase development will occur at the northwest quadrant of Corral Hollow Road and Interstate 580. First phase water improvements will include construction of the conveyance pipes from the City Water Treatment Plant in addition to an on-site, at grade, water tank and pump station. Future development, south of I-580, will include elevated storage tanks. To facilitate future phases, some components may be oversized. Additional transmission/distribution and storage facilities will be constructed as needed.

4.3.6 Trench Requirements

Changes to existing City standards pertaining to hillside development resulting from different geotechnical and site condition requirements will be addressed as applicable to update existing City standards. Any associated costs will be paid for by the developer requesting the update. Use of native material for bedding or backfill will be based on geotechnical recommendations.

4.4 RECYCLED WATER SYSTEM

4.4.1 Recycled Water

In accordance with the Tracy Municipal Code Chapter 11.30, Recycled and Non-Potable Water, the Tracy Hills project will participate in the City's recycled water system as defined in the Citywide Water System Master Plan including the onsite distribution network. Facilities for the water reclamation system would include system wide storage, pumping, and conveyance. The recycled water distribution system is shown on **Figure 4-9, Recycled Water Distribution System**.

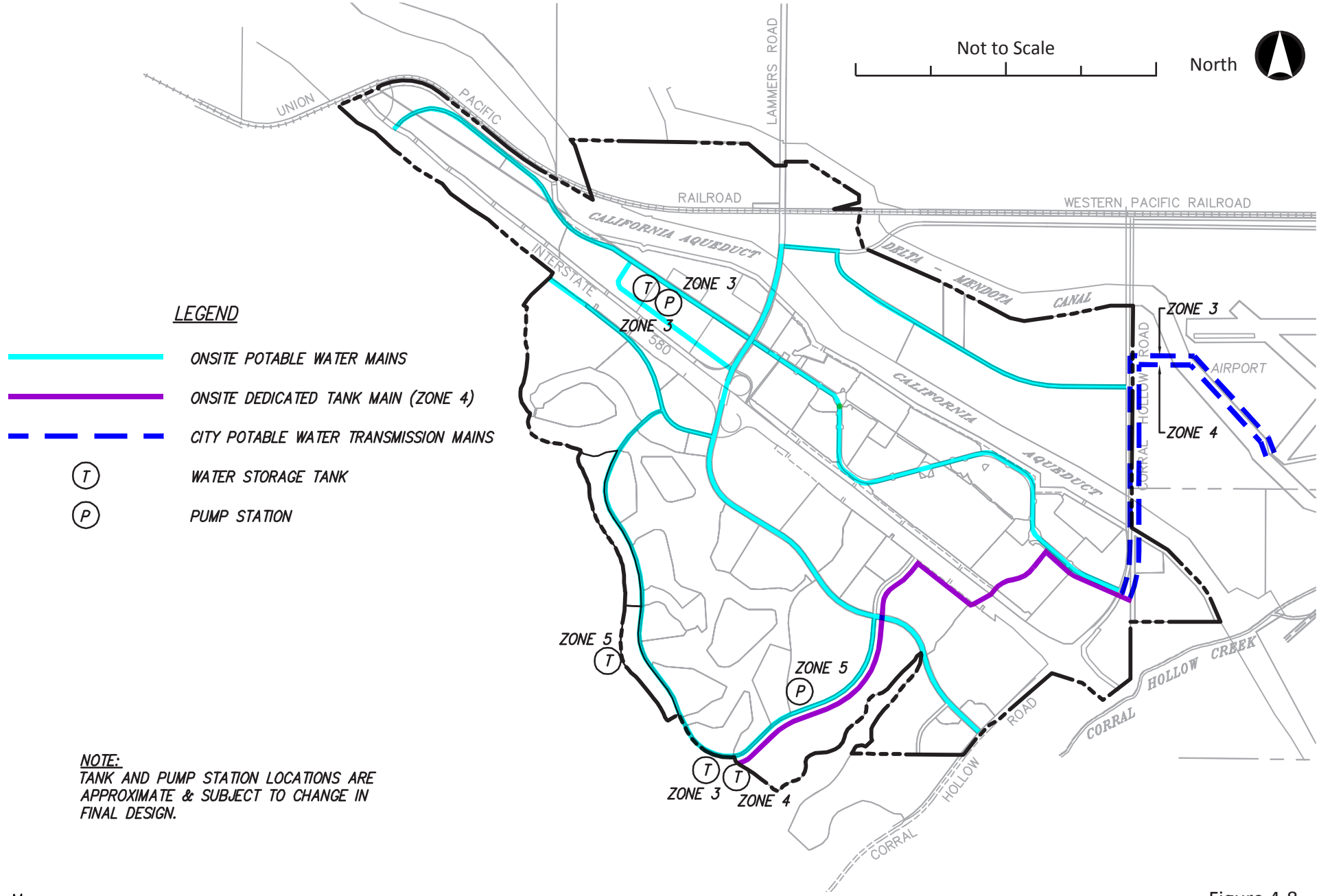

Figure 4-8

Water Distribution System

TRACY HILLS

Specific Plan

Page Intentionally Blank

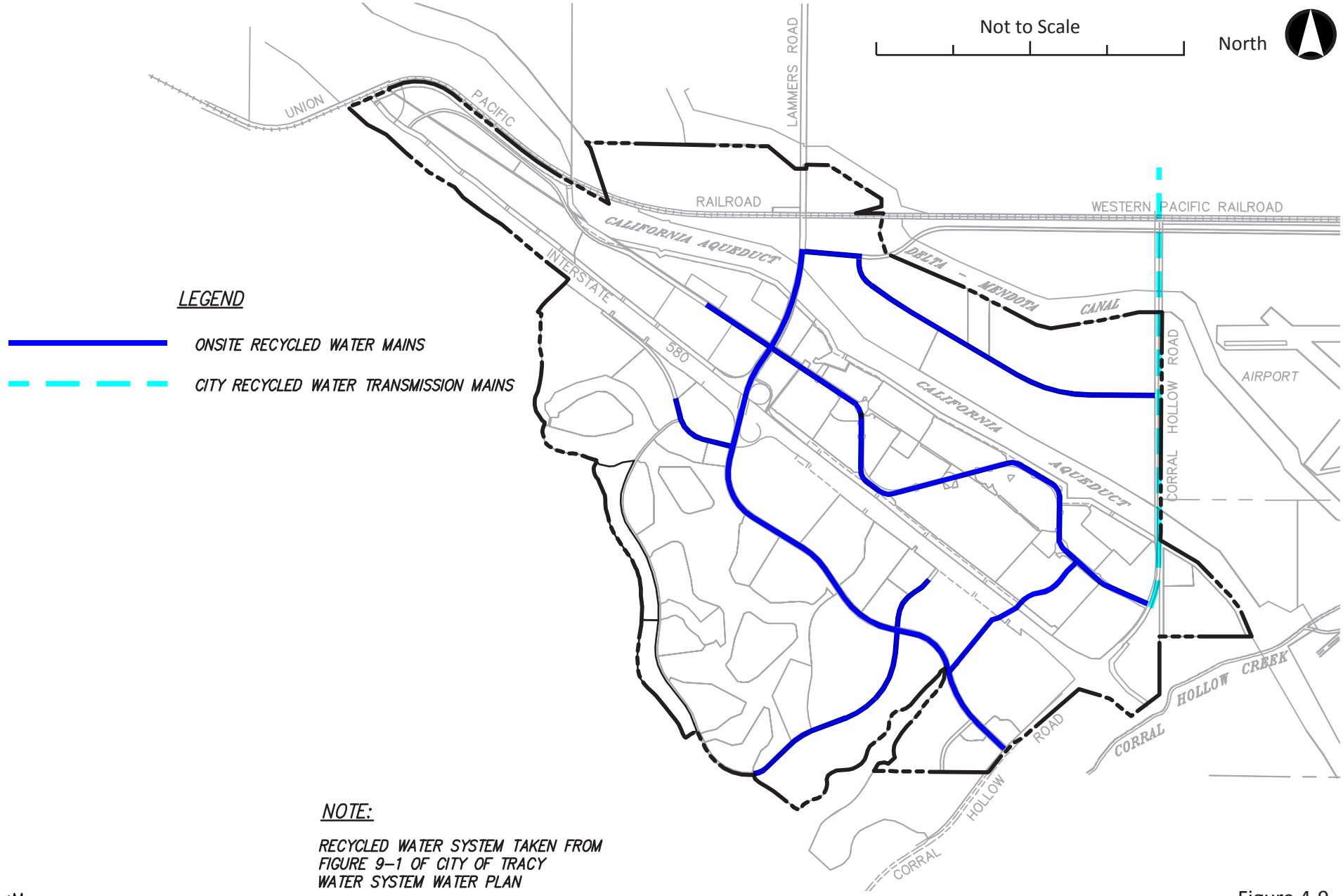

Figure 4-9

Recycled Water Distribution System

Page Intentionally Blank

4.5 WASTEWATER COLLECTION AND TREATMENT

Wastewater will be collected in a community-wide sewer system with treatment and disposal as described in the City of Tracy Wastewater Master Plan. In general, on-site wastewater will be conveyed to a City pump station to be built within the first phase of development. This facility will pump wastewater up Corral Hollow Road to a point after which gravity will convey the project wastewater to the City treatment plant for treatment and disposal.

4.5.1 Wastewater Collection System and Treatment

Using the Tracy Hills **Land Use Concept**, **Figure 1-3,** and aerial topography, an initial delineation of sanitary sewer flow shed areas has been determined. Using these shed areas, the sewer main paths and primary collection locations were established. These collection locations, when evaluated in context with existing topography, dictated the route of the sewer mains towards the proposed sewer pump station.

All public utility mains will be installed in public rights-of-way or easements, unless specifically approved by the City Engineer.

Layout of the sewer collection facilities is premised upon design of a complete gravity flow system west of I-580. Numerous constraints (I-580, California Aqueduct and Delta-Mendota Canal) exist that complicate gravity service. It will be necessary to provide one pump station between I-580 and the California Aqueduct and the potential for additional lift stations between the Aqueduct and the Delta-Mendota Canal and east of Corral Hollow Road depending on final site design. **Figure 4-10, Wastewater Collection System**, provides the probable layout of the collection facilities and the required pump station.

Average daily wastewater flows are estimated using the land use summary approved herein and unit generation factors from the City of Tracy Wastewater Master Plan. Refer to the approved Tracy Hills Phase 1A and Phase 1B sewer study dated October 6, 2014, for additional information.

4.5.2 Wastewater Treatment

Sewer generated from the Tracy Hills development will be treated at the Wastewater Treatment plant per the City of Tracy Wastewater Master Plan.

The main sewer conveyance pipelines will be installed from approximately W. Schulte Road, south in Corral Hollow Road to the project. The entire project will gravity flow to a proposed sewer pump station within the first phase of development. The pump station will convey wastewater via force main north in Corral Hollow Road to past the California Aqueduct where it will gravity flow north.

4.5.3 Trench Requirements

Changes to existing City standards pertaining to hillside development resulting from different geotechnical and site condition requirements will be addressed to update applicable existing City standards. Any associated costs will be paid for by the developer requesting the update. Use of native material for bedding or backfill will be based on geotechnical recommendations.

Page Intentionally Blank

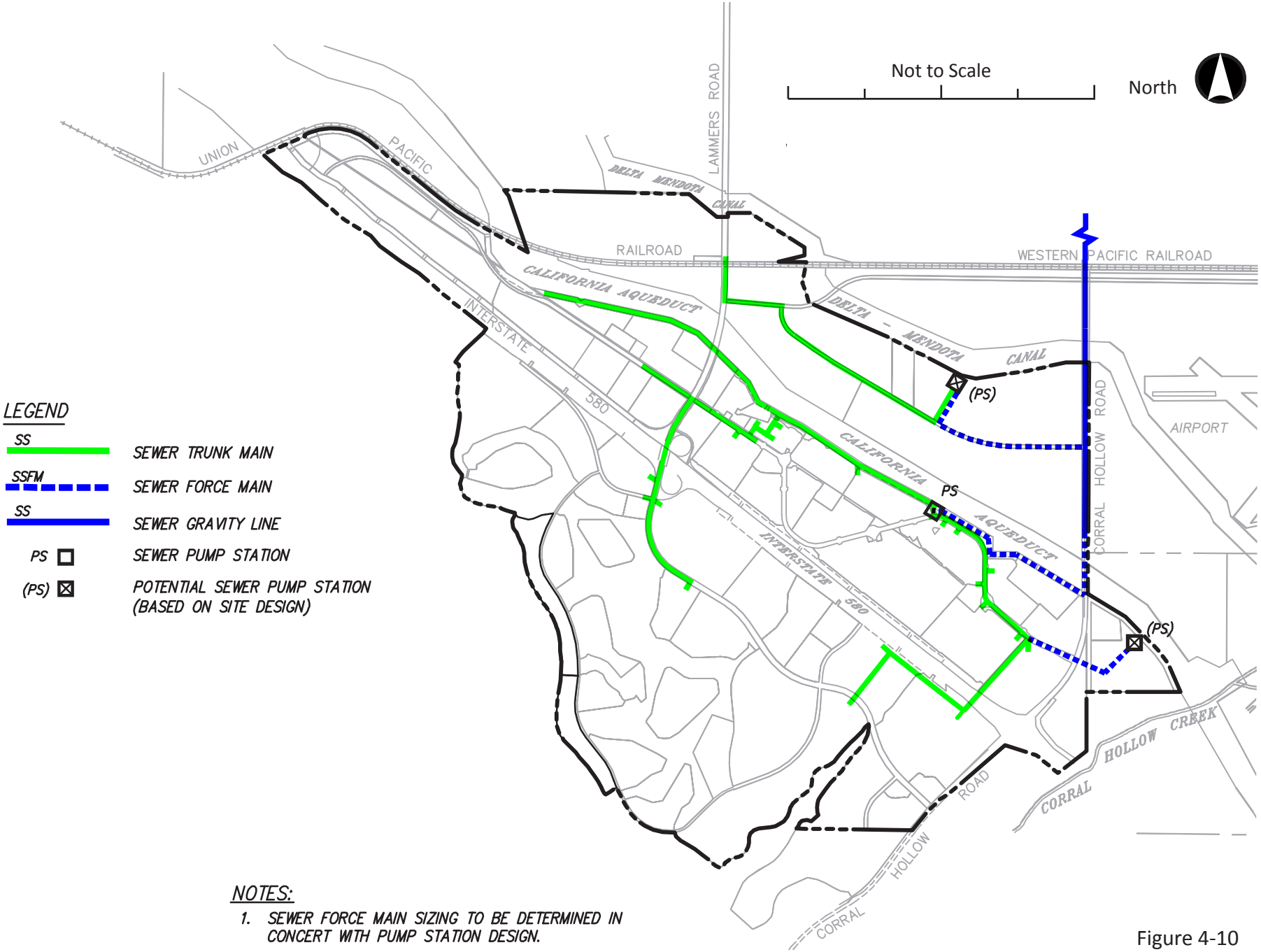

NOTES:

1. SEWER FORCE MAIN SIZING TO BE DETERMINED IN CONCERT WITH PUMP STATION DESIGN.

Figure 4-10

Wastewater Collection System

Page Intentionally Blank

4.6 STORM DRAINAGE SYSTEM

4.6.1 Existing Conditions

Tracy Hills is crossed and bordered by numerous canals and transportation thoroughfares that influence its drainage patterns. Interstate 580, a four-lane freeway, bisects the project by crossing from the northwest corner to the southeast corner. The California Aqueduct parallels I-580 to the north which also parallels the Delta-Mendota Canal north of the California Aqueduct. At the southeast corner of the project, I-580 and Corral Hollow Road create a major interchange. From this interchange, Corral Hollow Road, which is part of the project's southeastern boundary, runs north and crosses from south to north, the California Aqueduct, the Delta-Mendota Canal, the project's northern boundary, and the Union Pacific Railroad. Corral Hollow Road also runs southwest from the I-580 interchange and parallels Corral Hollow Creek. Corral Hollow Creek flows northeast toward the San Joaquin River.

Since the alignment of I-580, the California Aqueduct and the Delta-Mendota Canal generally follow the natural ground contours; these structures lie perpendicular to the natural direction of drainage flow. Various drainage structures including culverts, bridges, flumes, and pipelines are constructed over and under I-580, the California Aqueduct, and the Delta-Mendota Canal.

Of the drainage features near the project area, Corral Hollow Creek is the most significant. Its watershed originates in the hills southwest of the project encompassing approximately 62 square miles above the Delta-Mendota Canal. The steep topography of the area causes sharply-peaked runoff hydrographs producing "flash" flooding. Several miles northeast of the project, the creek channel abruptly ends due to farming operations which results in sheet flow toward the San Joaquin River, which dissipates into the ground.

Other natural drainage courses exist within the project area and a majority of the project area drains to these intermittent streams. These carry little runoff in comparison to Corral Hollow Creek, and the shed areas are correspondingly small. However, sharp hydrograph peaks are also characteristic of these intermittent streams. Prior to construction of the canals, storm runoff was carried northeasterly. Existing drainage facilities crossing Interstate 580 and the California Aqueduct represent significant constraints to runoff from the project area. For the last 40 years, the natural flow path of the intermittent streams has been intercepted by the Delta-Mendota Canal, resulting in some runoff directly discharging into the canal, flooding the adjacent properties, and infiltrating into the ground.

Because of the proposed project, the surface characteristics will change and increase the flow rates to these intermittent streams. The surface becomes less pervious, and the precipitation runs off instead of infiltrating into the ground. Under the developed scenario, flow through existing crossings of I-580, the California Aqueduct, and the Delta-Mendota Canal would be mostly reduced from historical flows due to the use of proposed onsite retention basins.

4.6.2 Collection System

The overall project consists of approximately 2,731.6 acres including proposed residential, commercial, mixed use business park, and industrial uses.

Under current conditions at Tracy Hills, runoff from most of the site drains across I-580 and the California Aqueduct via existing drainage structures (culverts and flumes). The majority of this runoff infiltrates into open farmland between I-580 and the California Aqueduct and between the California Aqueduct and the Delta-Mendota Canal. The remainder flows into the Delta-Mendota Canal. In addition, a small portion of the site currently drains to Corral Hollow Creek.

The U.S. Bureau of Reclamation will generally not allow urban runoff to enter the Delta-Mendota Canal. It will be necessary to mitigate the increase in peak flow and total runoff from the site so that flooding downstream of the site will not become more severe. The concept for handling storm runoff involves intercepting runoff from developed areas for disposal to multiple terminal retention basins within the project site. Pipes and channels will be used to convey water to these basins. To the greatest extent possible, runoff from the west of the developed areas will be allowed to

continue in natural drainage courses and intermittent streams. These stream courses will be relocated, as appropriate, to cross the developed portion of the site.

Within the project, runoff will be carried in underground pipes and open channels. Multi-use of retention basins will be subject to approval by the City. Major pipes and channels will be sized to carry 100-year peak flows. The location and alignment of these facilities is shown on **Figure 4-11, Storm Drainage System**.

The proposed facility plan is a gravity system utilizing pipes and a channel to carry runoff to the onsite retention basins. Existing structures at the California Aqueduct and Delta-Mendota Canal crossings will continue to be used. Principal mechanisms for disposal of stored runoff include evaporation and percolation.

The Storm Drainage System will be owned, operated, and maintained by the City of Tracy. Details are included in the Tracy Hills Storm Drainage Master Plan.

4.6.3 Storm Drainage System Phasing

Construction of the master drainage facilities will coincide, for the most part, with the construction of the project phases. As an interim measure, each development within the respective phases may provide its own temporary storm drainage facilities, either on-site or off-site, to retain the runoff until the master storm drainage facilities are constructed and functional.

The first phase of development located north and west of the Corral Hollow/I-580 interchange will be served by both interim and permanent storm drainage facilities. For the most part, storm drainage runoff will be routed to the first phase retention basin. Additional storm drain facilities will be constructed to route runoff from south of I-580, through the first phase of the development and across the California Aqueduct.

Subsequent phases of development will also be served by storm drainage retention ponds.

4.6.4 Quality of Storm Water Discharge

Since the Tracy Hills project will be served by terminal retention basins, rather than discharging to a municipal system or natural waterway, separate water quality treatment is not necessary. Sediment control, during and post construction, will still be employed. During the construction phase of the project, the primary storm water concern is for sedimentation control. Since a fundamental goal of any erosion control plan is to protect the quality of the receiving waters during construction, implementation of an erosion control plan should include the control of ground-disturbing activities during the rainy season. Some of the techniques that will be considered to control the water quality of runoff during construction are temporary vegetation with grasses; spreading mulch over exposed earth and embankments; temporary sediment detention basins constructed in the drainage course; and wattles placed adjacent to channels or drains that would directly discharge into the storm drainage facilities. Refer to the approved Tracy Hills Storm Drainage Master Plan, dated October 2014, for additional information. Additional details, including forebays to address long term sediment collection and facilitate maintenance, will be part of the project construction document.

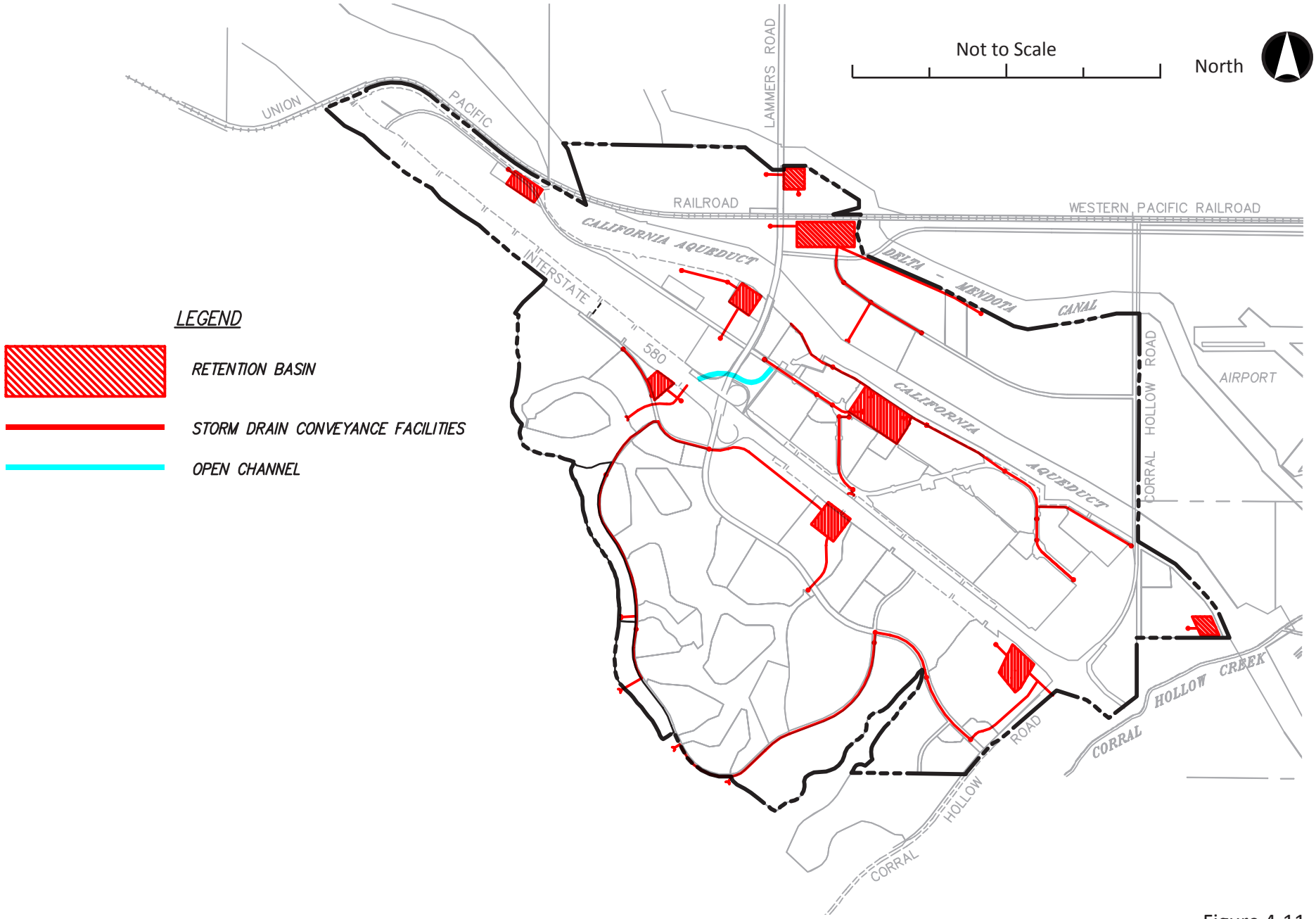

Figure 4-11
Storm Drainage System

Page Intentionally Blank

4.7 PUBLIC FACILITIES AND SERVICES

The Tracy Hills Specific Plan will require a full range of public services. The Specific Plan addresses the services to be provided by a variety of public and private entities including infrastructure, educational facilities, and parks and recreation.

4.7.1 Electricity

The Tracy Hills project is in the PG&E service area. PG&E has indicated that the 12 KV lines in Lammers and Corral Hollow Roads will provide sufficient capacity to service approximately half the proposed project. In order to accommodate the entire Tracy Hills project a substation may be built at or near the project site**.** Refer to Chapter 3**,** Design Guidelines, for methods of screening utilities equipment, and/or other similar facilities, from adjacent to residential development.

4.7.2 Natural Gas

PG&E existing gas facilities lie at the northeastern most edge of the Tracy Hills project. These facilities consist of a two-inch gas line and a 26-inch high pressure gas main. A two-inch gas line runs along Lammers Road and terminates near the Delta-Mendota Canal (where Lammers Road ends). A 26-inch high pressure gas main runs in a northwesterly direction roughly paralleling the Delta-Mendota Canal.

In order to serve the Tracy Hills project, gas lines will have to be extended from the existing gas mains just south of the Delta-Mendota Canal, south to the site and across or under the California Aqueduct and Interstate 580.

4.7.3 Telephone

AT&T, or other service provider, currently has few customers in the vicinity of the Tracy Hills project. Therefore, the project site will require the extension of a trunkline to the site.

Telephone service lines may be traditional copper conductor lines or advance technology fiber optic cables.

4.7.4 Cable Television

The Tracy Hills area may be served by Comcast or other cable television providers. This service will utilize fiber optic cables or other technologies. All residents and companies living or working in Tracy Hills will be able to take advantage of these technologies.

4.7.5 Solid Waste

Solid waste from the project will be accommodated at the Tracy Materials Recovery Facility (MRF transfer facility). The MRF transfer facility is planned to accommodate a City of Tracy population which includes Tracy Hills in accordance with the County Solid Waste Master Plan. Solid waste will eventually be hauled from the MRF transfer facility to the County Foothill landfill east of Tracy.

The City of Tracy uses a franchise hauler to provide solid waste collection services to its residents. Based upon the current generation factor of 7.52 pounds/person/day (residential, commercial, industrial average), solid waste production will be approximately 54 tons/day.

4.7.6 Schools

Tracy Hills is within two school districts. Elementary school facilities are under the Jefferson School District and high school facilities are within the Tracy Unified School District.

The need for school facilities is determined by population trends, residential densities, proximity, and size of existing school facilities, class size standards, and projected enrollment. Phasing of educational facilities will partially depend on where development occurs first. The Tracy Hills Specific Plan is anticipated to include three potential elementary school

(K-8) sites located within the Specific Plan area but the final number and locations of elementary schools will be determined in accordance with the Jefferson School District Facilities Master Plan as the Specific Plan is built out. The Tracy Unified School District's Facilities Master Plan will determine high school facilities.

4.8 PROJECT PHASING

Full development of the Tracy Hills Specific Plan area may take up to 20 years or more to complete, depending on market conditions. Conceptually, it will be phased generally from east to west or from the Corral Hollow Road end of the site to the western portions of the site (see **Figure 4-12, Phasing Plan**).

4.8.1 Phase 1A

Phase 1A will include the development of the residential neighborhood with three neighborhood parks, open space easements, and an elementary school between I-580 and the California Aqueduct, between Corral Hollow Road and Lammers Road. Also planned for development is the Mixed Use Business Park adjacent to Corral Hollow Road.

4.8.2 Phase 1B

Phase 1B is a continuation of residential development in the areas between I-580 and the California Aqueduct. Mixed Use Business Park development along the I-580 corridor is planned along with commercial development along Lammers Road. Parks, and open space corridor improvements will also be constructed.

4.8.3 Future Phases

Future development phases will include residential, mixed use business park, and general highway commercial development southwest of I-580 and west of Corral Hollow Road, and industrial park and residential development north of the California Aqueduct, as individual land owners submit development applications.

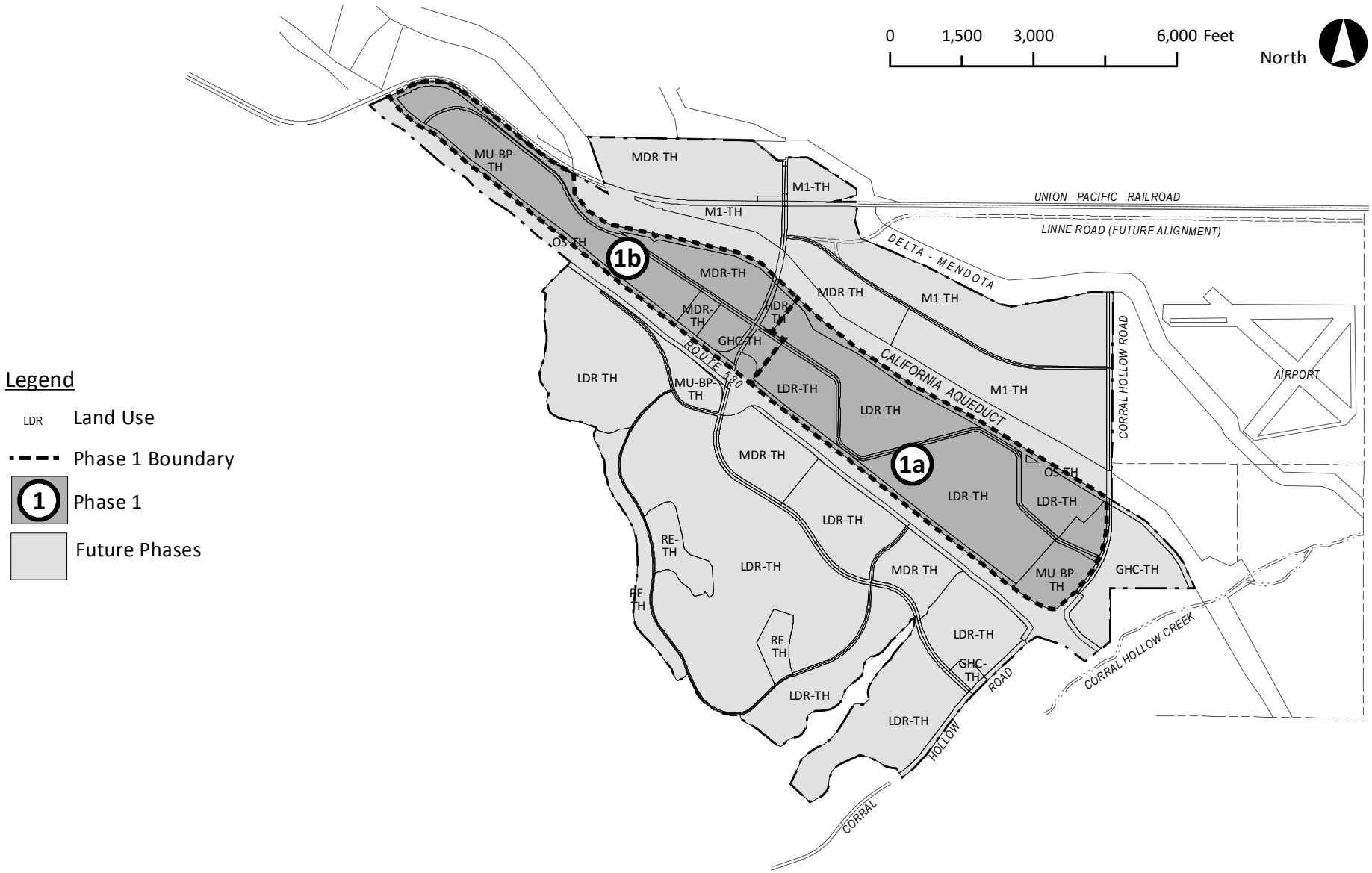

Figure 4-12

Phasing Plan

TRACY HILLS

Specific Plan

Page Intentionally Blank

4.9 INFRASTRUCTURE FUNDING

This section provides a generalized overview of financing measures which may be appropriate to finance the development and construction of public infrastructure and capital facilities necessary to support the build-out of the Tracy Hills Specific Plan area. Public infrastructure and capital facilities will include both on-site and off-site improvements:

- Water treatment and distribution
- Wastewater treatment and conveyance
- Recycled water distribution
- On-site storm water conveyance and retention
- Dry utilities (electric, gas, phone and cable TV)
- Off-site transportation improvements
- On-site roads, sidewalks, and trails
- Parks and open space
- Schools
- Public landscaping and lighting
- Public safety facilities and services
- Public buildings
- Right-of-way acquisition

4.9.1 Funding Sources

The development and construction of on-site and off-site infrastructure improvements, the timing at which these improvements are to occur, and the ability to finance improvements are related to a number of factors including development phasing and project absorption. It is estimated that the Tracy Hills Specific Plan area will develop in multiple phases, and public infrastructure needed to serve Tracy Hills will be constructed through a combination of funding sources including, but not limited to, the following:

- Development impact fees
- Community Facilities Districts
- Bond proceeds
- Private capital
- Regional, state and /or federal funding and grants
- Lighting and Landscape Districts or Landscape Maintenance Districts
- Utility connection charges and user fees
- Credits and reimbursements related to oversizing infrastructure, pursuant to Chapter 13.08 of the Tracy Municipal Code.
- Quimby Act fees (Parks)
- Tracy Unified School District/Jefferson School District fees

4.9.2 Finance and Implementation Plan

More detailed finance information will be prepared and submitted in a Finance and Implementation Plan (FIP). Before any tentative map application will be approved by the City, the subdivider shall prepare a detailed FIP which covers all of the development proposed in the specific phase within which the tentative map property is located. The FIP may require the execution of several elements including, but not limited to, the following:

- A Development Agreement (DA) or Development Agreements
- Credit or reimbursement agreements
- Covenants, Conditions and Restrictions (CC&Rs)
- Applications and grants for State and Federal funding
- Bond financing
- Landscape Maintenance District and/or Community Facilities District

4.10 MAINTENANCE

The maintenance of the roads, landscaping, parks, retention basins, trails, open space features and other public improvements and amenities within the Tracy Hills Specific Plan area will be funded through a combination of any or all of the following:

- Standard City maintenance responsibility
- Assessments from property owners, potentially both residential and non-residential associations, for example, homeowners associations (HOA) and/or property owners' associations (POA)
- Community Facilities Districts
- Payment by Tracy Hills residents for City water, wastewater, and storm drainage user fees
- Other utilities (such as electricity, natural gas, and telephone) and services (such as solid waste collection) will be maintained through fees and charges of the appropriate service providers

4.10.1 Maintenance Responsibilities

This section describes the conceptual maintenance responsibilities of different land use project facilities within the Specific Plan area and may include the City, or HOA and/or POA, or any other appropriate entity approved by the City. Refer to **Figure 4-13, Maintenance Responsibility (Phase 1A).** Subsequent development phases will require maintenance responsibility exhibits to be prepared and submitted for City review with each tentative subdivision map.

1. City of Tracy

The City will maintain the following:

- City Parks upon acceptance by the City
- The portion of public right-of-ways that include streets, on-street bikeways, sidewalks, curb and gutter, street signage, street lighting, including traffic controls, and sewer, water and storm utilities
- Storm Retention Basins
- Water Storage and Pumping Facilities
- Sewer Pump Station

2. Homeowners Association and/or Property Owners Association

A Homeowners and/or Property Owners Association(s) will maintain the following:

- All landscaping including irrigation (controllers, pipes, sprinklers), walls and fencing, and monumentation within right-of –ways including median and round-a-bouts
- Spine Road fence
- All street seating areas/benches, and trash receptacles
- All common area landscaping, walls and fencing, signage and monumentation
- All private/HOA parks including but not limited to landscaping, play equipment, shade structures, seating areas/benches, and trash receptacles
- Open Space, pipeline easements, conservation easements, and State drainage easement including landscaping and irrigation access roads, fencing, and gates in these areas.
- Landscape utility corridors and slope easement areas

Page Intentionally Blank

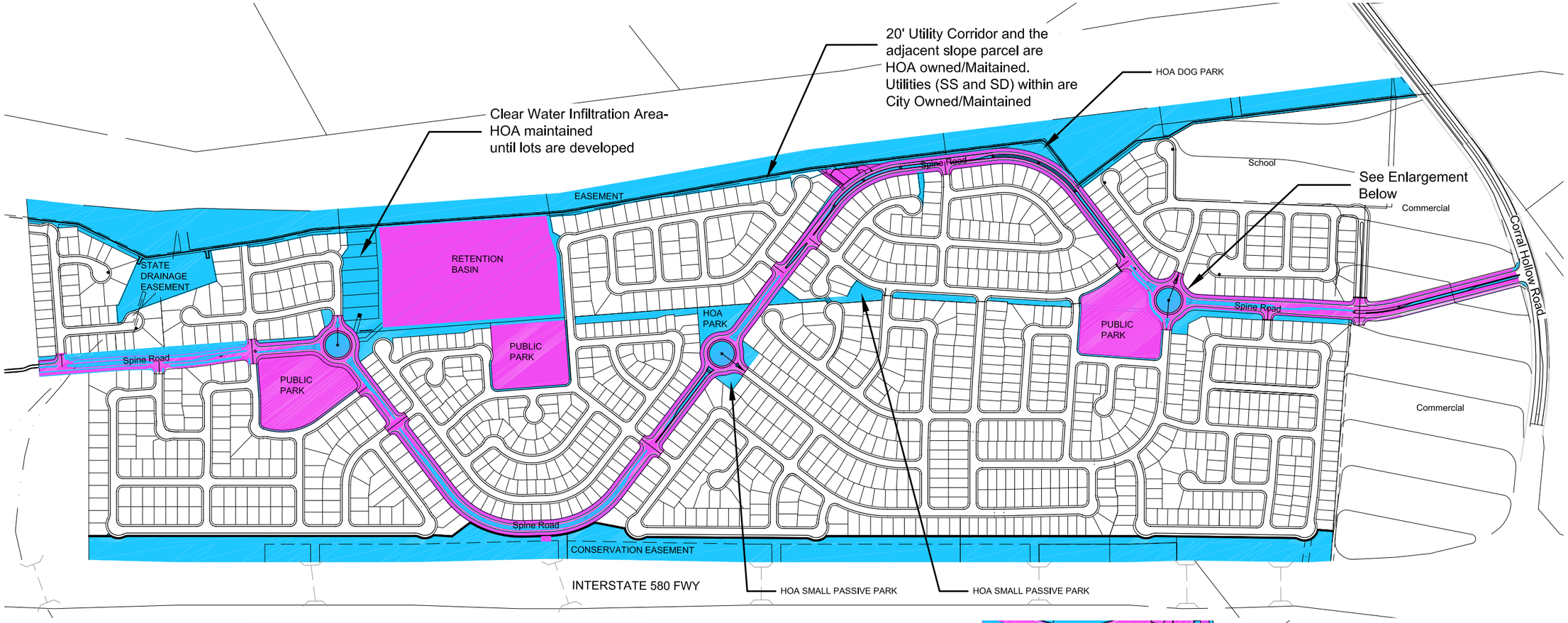

MAINTENANCE RESPONSIBILITY LEGEND

Symbol	Description
	City Maintained • Public Parks • Park Perimeter 5' Walk • Spine Road 10' Walk • Street (on street bike lanes, curb & gutter, street signage, street lighting including traffic control signs, and Sewer, Water, and Storm Utilities) • Storm Retention Basin • Sewer Pump Station
	Homeowners Association and/or Property Owners Association • Spine Road Median and Roundabouts • Spine Road 6.5' Parkway • Spine Road 5' Landscape to R/W • Buffer Landscape at Conservation Easement • Landscape Lots, Park Parkways, Maintenance Road Utility Corridor • 16.5' Wide Pipeline Easement Trail (Community Pipeline Corridor and Conservation Easement Fencing and Walls) • Private/HOA Parks • Open Space/Conservation Easement Corridors • State Drainage Easement • Clear Water Infiltration Area

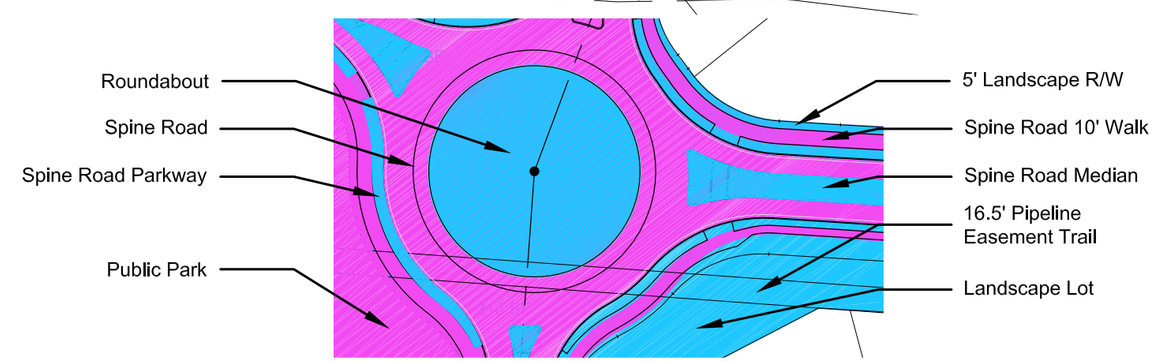

TRACY HILLS
Specific Plan

Figure 4-13
Maintenance Responsibility (Phase 1A)

Page Intentionally Blank

4.11 ENGINEERING DESIGN GUIDELINES

The Tracy Hills project present many engineering design challenges. The complex utility infrastructure and hillside terrain are unique compared to the typical "flatland" development throughout much of the City. Therefore, there are several engineering design conditions where the City Standard Plans for Streets and Utilities cannot be applied or Standard Plans do not exist to address specific design elements.

In addition, the current City Standard Plans for Streets and Utilities have not yet been updated to address the recently adopted City Master Plans. One example of this is the City Standard Plans for curb inlets, which were based on sidewalk being immediately adjacent to the curb and gutter. The current City Transportation Master Plan (and the Tracy Hills Specific Plan) both require separated sidewalks.

In order to take advantage of Standard Plans available within the engineering industry (vs developing unique and untested designs), this Specific Plan includes multiple Standard Plans taken from Caltrans and other Northern California agencies. These Standard Plans have been included in the Tracy Hills Specific Plan as "Engineering Design Guidelines". Current, applicable Standard Plans are included (refer to Figure 4-14, Standard Rip Rap Energy Dissipator; Figure 4-15, Type "G" Inlet; Figure 4-16, Type "J" Inlet; Figure 4-17, Type I Manhole; Figure 4-18, Type II Manhole Base; Figure 4-19, Type III Manhole Base; Figure 4-20, Type IV Manhole Base for CIP; Figure 4-21, Type 5 Manhole Base; Figure 4-22, Inlet/MH General Notes & Details; Figure 4-23, Type "M" Headwall; Figure 24, Pipe Culvert Headwalls Straight and "L"; Figure 25 Pipe Culvert Headwalls Endwalls and Wingwalls Types A, B and C; Figure 26, Inlet Trash Rack 33" Pipe or Larger)

It should be noted that as design progresses in subsequent phases, additional Standard Plans may be needed. Any Standard Plans to be used that are not included herein will be included as sheets of the appropriate construction documents and approved as part of the City's plan approval process.

Ref: San Diego Regional Standard Drawing D-40 Dec. 1975

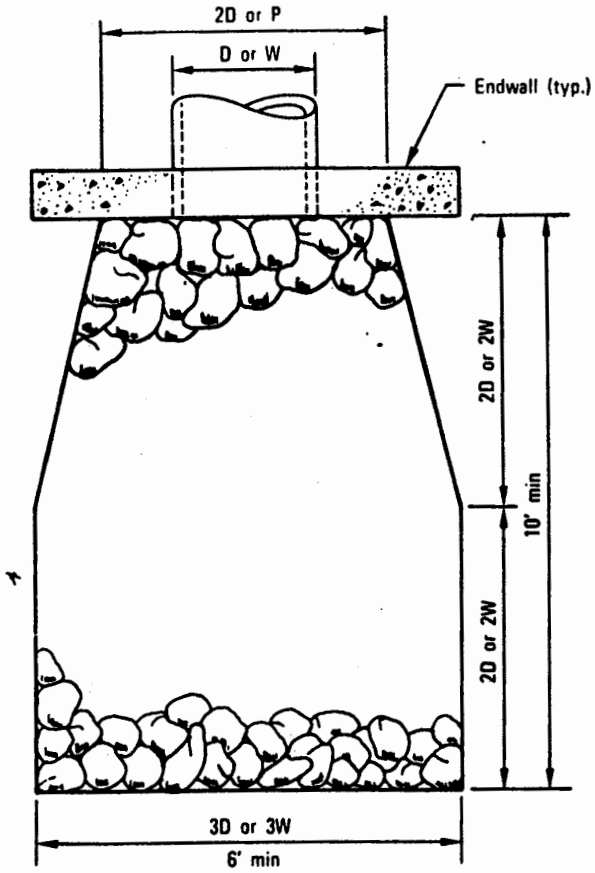

PLAN

D = Pipe Diameter

W = Bottom Width of Channel

P = Wetted Perimeter of Channel

Design Velocity (ft./sec.)	Rock Classification
6 - 10	No. 2 Backing
10 - 12	1/4 Ton
12 - 14	1/2 Ton
14 - 16	1 Ton
16 - 18	2 Ton

SELECTION OF RIP RAP

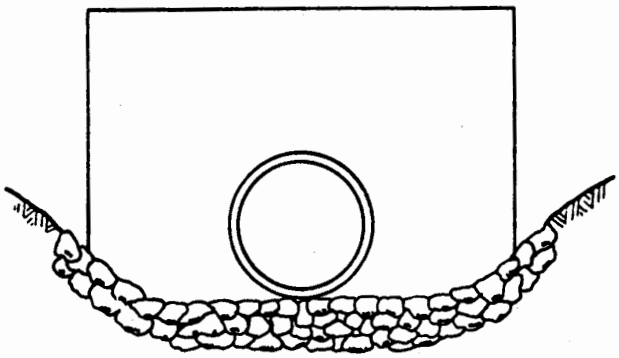

ELEVATION

NOTES

1. Type of Rip Rap
   a. Regular Quarry Stone
   b. Rounded Cobblestone
   c. Broken Concrete (only allowed upon approval of the Agency)
2. Placement
   a. Minimum depth = 1 1/2 times average stone size.
   b. Rocks shall be placed so as to provide a minimum of voids.
   c. Surface rocks or concrete shall protrude to at least 1/2 their vertical dimension.
   d. Rip Rap is to be placed over a natural bedding, or it may be grouted or placed over a gravel bedding when required by the Agency.

REV.	DATE	BY	CITY OF HAYWARD ENGINEERING DIVISION		STANDARD RIP RAP ENERGY DISSIPATOR	DWG. NO. SD-413
			DRAWN BY: RPE	DATE: DEC. 1976		FILED 6-15-93
			CHECKED BY: JRL	SCALE: NONE		
			APRO. BY: CITY ENGR.	APPROVED: DIR. PUBLIC WORKS		SHT. 1 OF 1

Figure 4-14

Standard Rip Rap Energy Dissipator

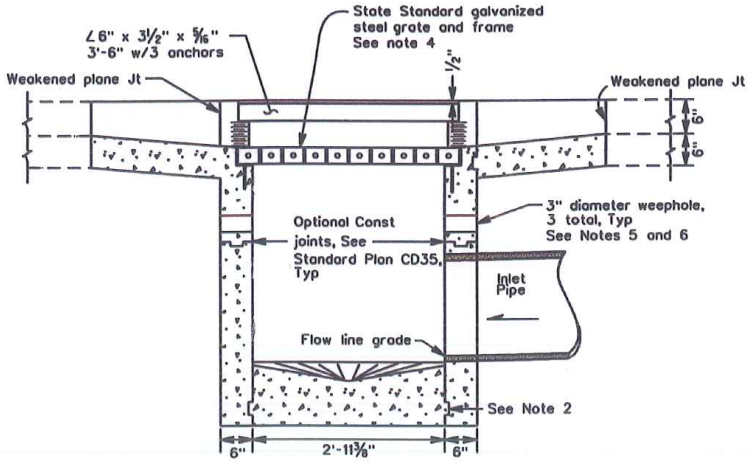

SECTION A-A
NO SCALE

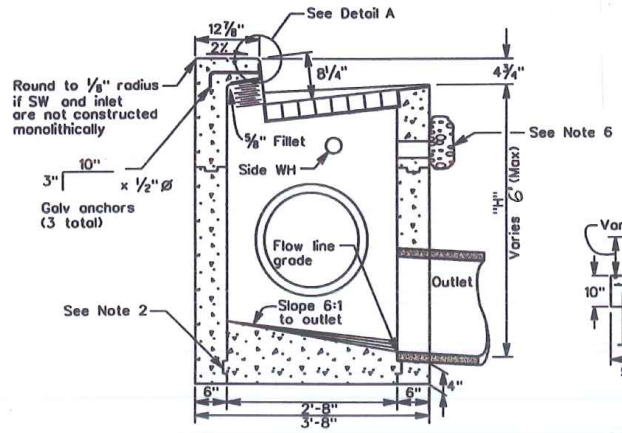

SECTION B-B
NO SCALE

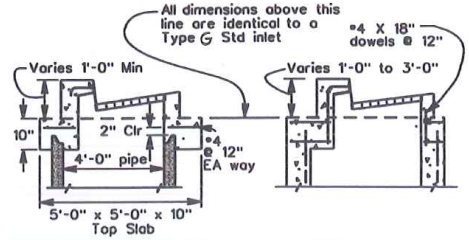

SECTION OF TYPE G OPENING
ON PRECAST MANHOLE BARREL
SEE STANDARD PLAN CD30

SECTION OF TYPE G OPENING
ON MANHOLE BASE
SEE STANDARD PLAN CD31 OR CD32

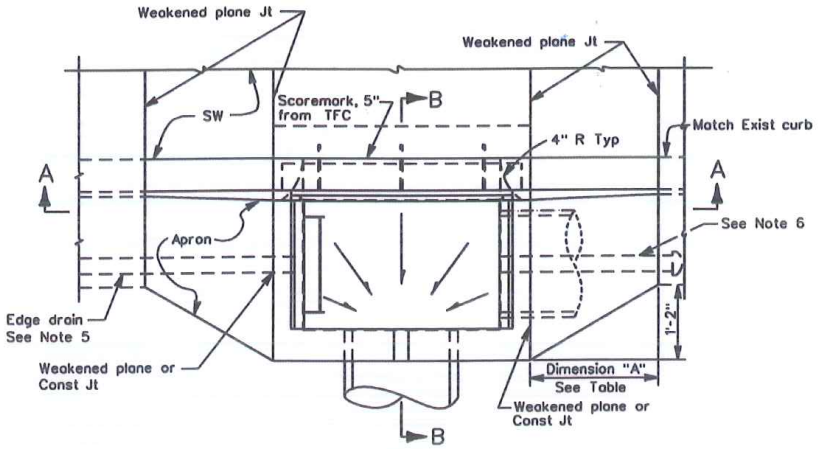

PLAN
NO SCALE
GRATE NOT SHOWN

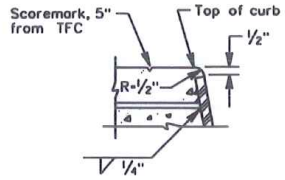

DETAIL A
NO SCALE

NOTES:

1. For Inlet General Notes and Details, see Standard Plan CD35.
2. Construction joints are optional where shown, other locations are subject to the approval of the Public Works Department. Key dimensions-¾" x 3".
3. When dimension "H" exceeds 6'-0", use a manhole base with Type "G" inlet top.
4. See Caltrans Standard Plan D77A for inlet frame and Caltrans Standard Plan D77B for type 24-10S inlet grate.
5. If edge drains are specified by Public Works Department or shown on the plans,
6. See Standard Plan CD35 for weephole drainage details unless edge drain is shown on plans or as specified by Public Works Department.

TABLE

DIMENSION "A" (in)		
UPSTREAM CURB GRADE	"A" UPSTREAM	"A" DOWNSTREAM
2% and less	24	24
3%	36	24
4%	48	24
5%	60	24
6%	72	24
7%	84	12
8%	96	12
9%	108	12
10% and greater	120	12

See "DETAIL FOR STEEP CURB SLOPE"

When curb grade upstream is 5% or greater, depress upstream edge of grate to 10".

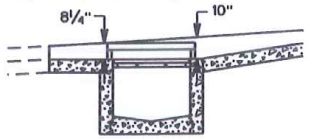

DETAIL FOR STEEP CURB SLOPE

Figure 4-15
Type "G" Inlet

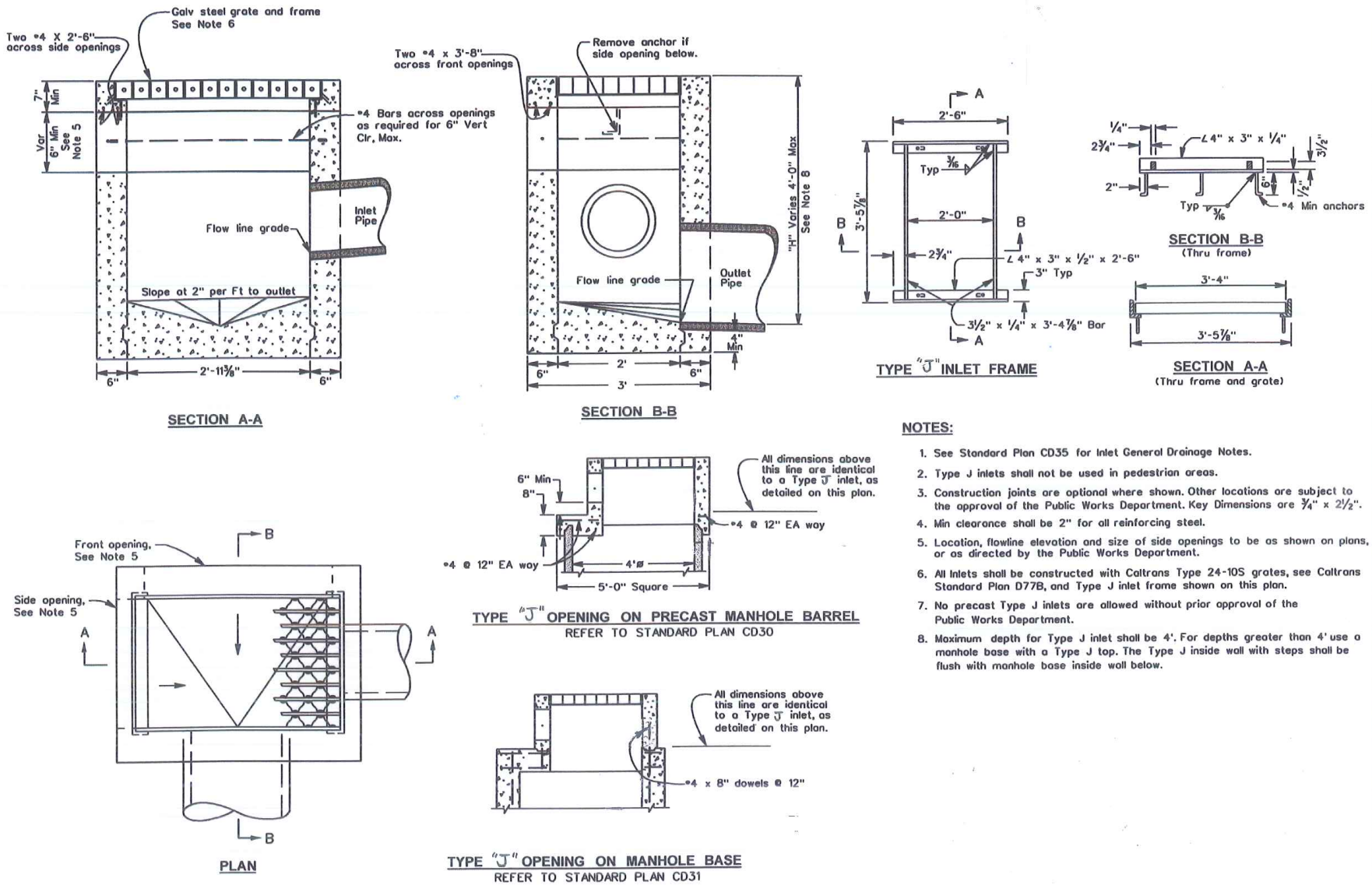

NOTES:

1. See Standard Plan CD35 for Inlet General Drainage Notes.
2. Type J inlets shall not be used in pedestrian areas.
3. Construction joints are optional where shown. Other locations are subject to the approval of the Public Works Department. Key Dimensions are ¾" x 2½".
4. Min clearance shall be 2" for all reinforcing steel.
5. Location, flowline elevation and size of side openings to be as shown on plans, or as directed by the Public Works Department.
6. All Inlets shall be constructed with Caltrans Type 24-10S grates, see Caltrans Standard Plan D77B, and Type J inlet frame shown on this plan.
7. No precast Type J inlets are allowed without prior approval of the Public Works Department.
8. Maximum depth for Type J inlet shall be 4'. For depths greater than 4' use a manhole base with a Type J top. The Type J inside wall with steps shall be flush with manhole base inside wall below.

Figure 4-16

Type "J" Inlet

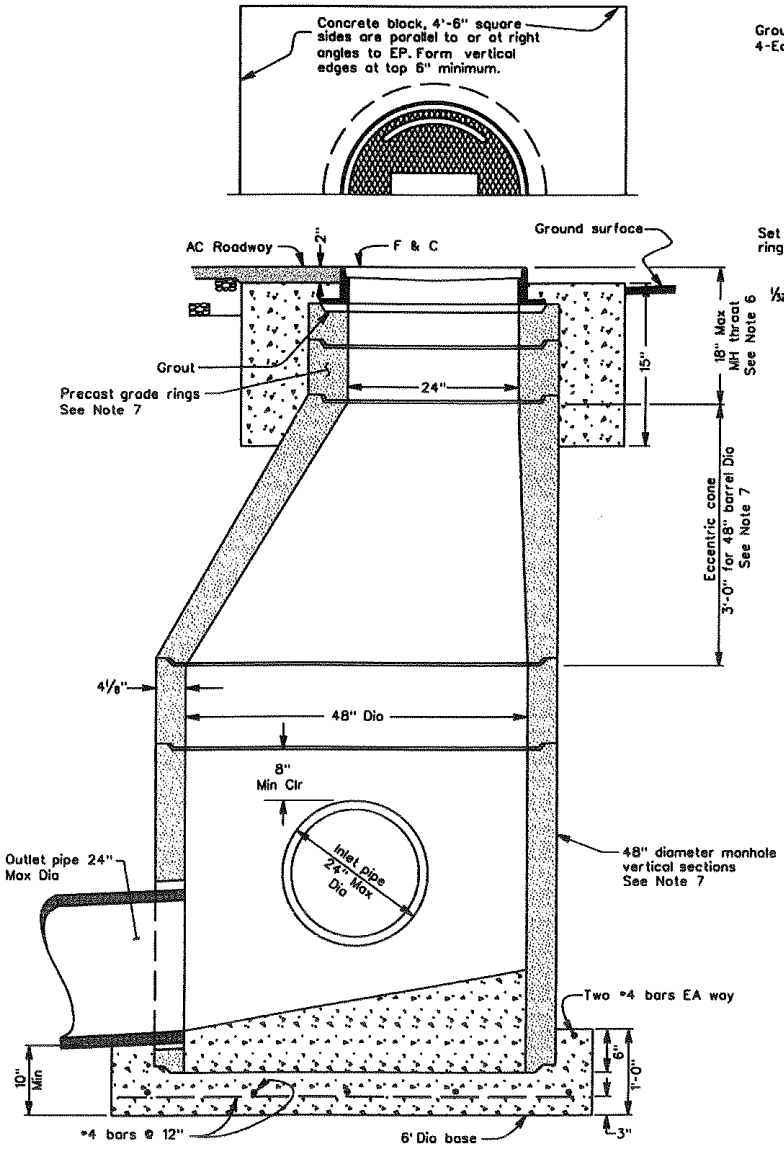

PRECAST MANHOLE WITH TYPE I BASE

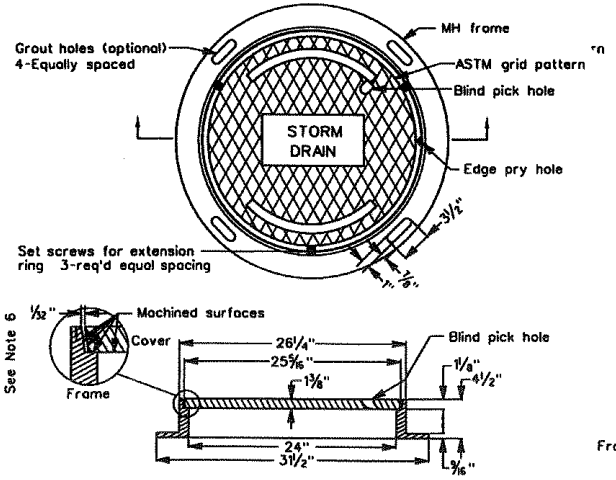

TYPICAL FRAME AND COVER DETAIL

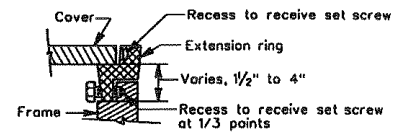

TYPICAL CAST IRON EXTENSION RING
See Note 7

NOTES:

1. For General Manhole Notes and Details, see Standard Plan CD35.
2. All concrete joints shall be cleaned wetted, and mortared prior to setting next section. Joints shall then be patched, troweled, and brushed smooth.
3. Frame and extension rings must be secured by concrete block, unless approved otherwise by the Public Works Department.
4. Manhole cover frame shall be adjusted to conform to grade and cross slope of pavement.
5. Manhole frame and cover shall be Phoenix Iron (Oakland) Model P-1090 or South Bay Foundry No. 1900 CPH or approved equivalent.
6. Use of precast grade rings are limited by 18" maximum manhole throat length. Cast iron extension rings are allowed for conforms to pavement overlays only.
7. The precast components shall conform to the Central Precast (U.S. Concrete Precast Group, Northern California) Drawing Nos. 20-48C, 20-48V and 20-48 EC, or equivalent.

Figure 4-17
Type I Manhole

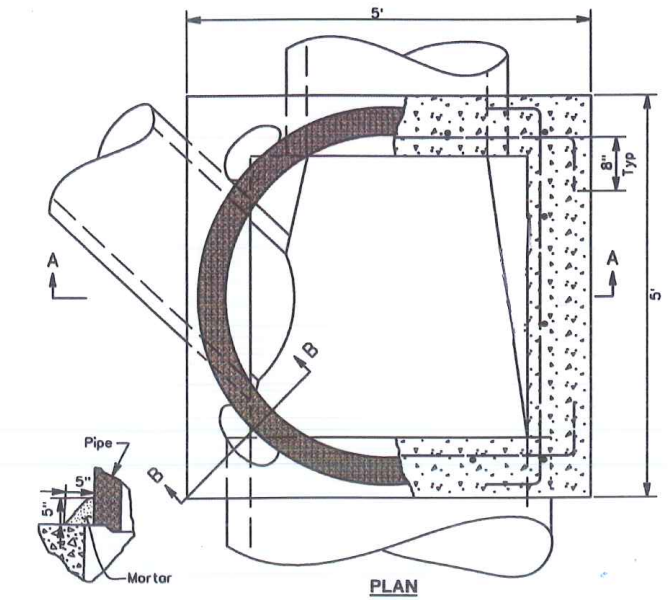

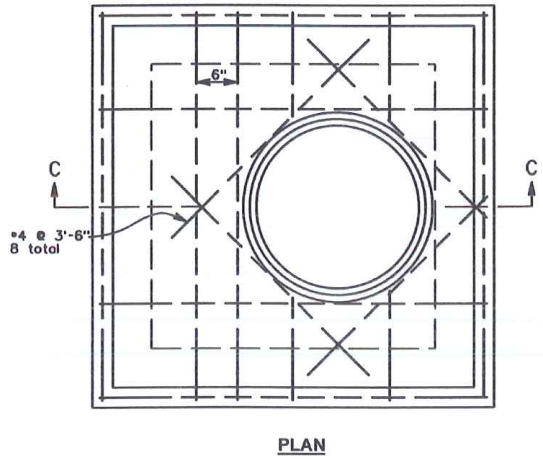

NOTES:

1. For Manhole General Notes and Details, see Standard Plan CD35.
2. Construction joints are optional where shown. Other locations are subject to approval by the Public Works Department. Key dimensions are 1½" x 3".
3. Inlet and outlet pipes shall not intercept a manhole base through a corner. If skew angle is too great to permit the opening to be made in a single wall use a Type III manhole base. (See Std Pln CD32).
4. For details of manhole frame and cover, See Standard Plan CD30.

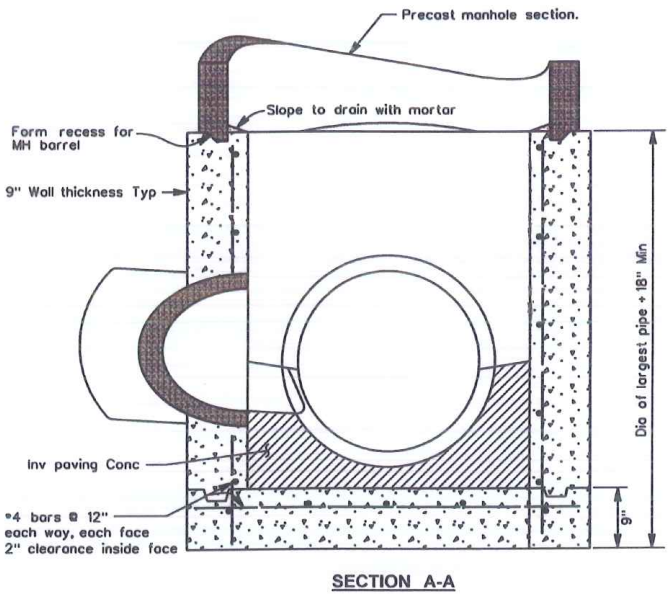

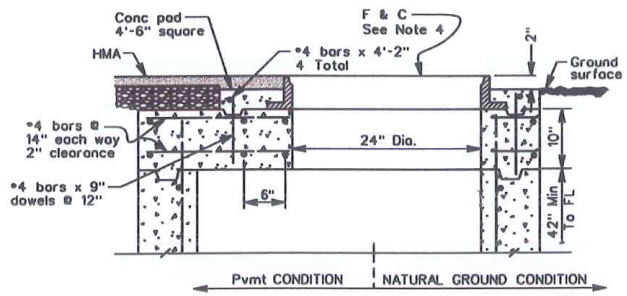

SECTION C-C
TOP SLAB

USE TOP SLAB:

1. When there is insufficient depth between the top of the manhole base and finish grade for precast manhole eccentric cone section per Standard Plan CD30.
2. When placing a Type G inlet opening on a Type II manhole base. The opening in the slab shall conform to the inside dimensions of the inlet to be used.

Figure 4-18
Type II Manhole Base

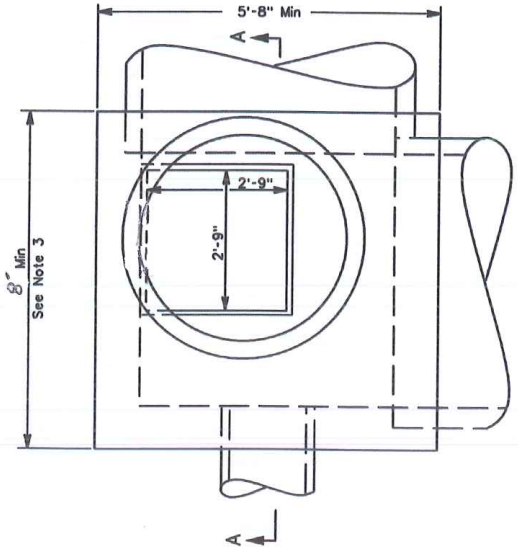

PLAN

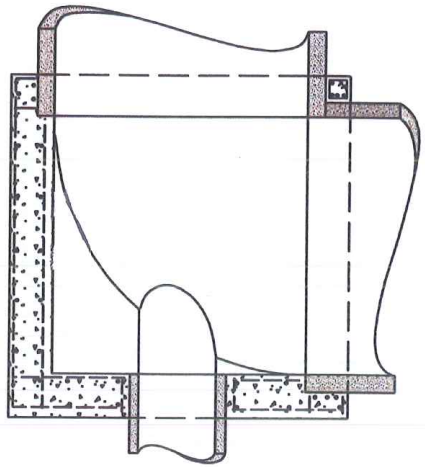

PLAN SECTION

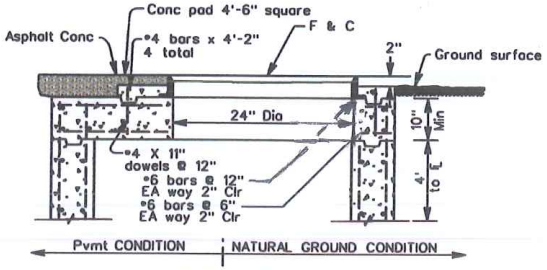

TOP SLAB

USE TOP SLAB:

1. When there is insufficient clearance between the top of the manhole base and finish grade for a precast eccentric cone section.
2. When placing a Type G inlet opening on a Type III manhole base. The opening in the top slab shall conform to the inside dimensions of the inlet to be used.

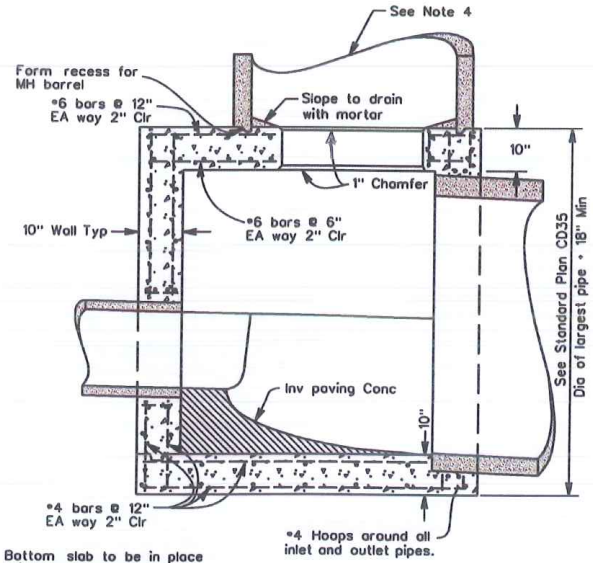

Bottom slab to be in place prior to construction of pipe where cast-in-place is used.

SECTION A-A

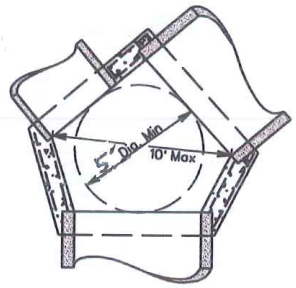

PLAN SECTION

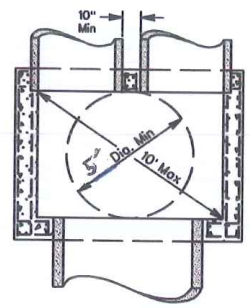

PLAN SECTION

SPECIAL APPLICATIONS OF TYPE "III" MANHOLE BASES

When circumstances, such as excessive skew or parallel pipes prevent the use of a standard Type III manhole base detailed elsewhere on this plan. The walls may be lengthened or relocated to accomodate the pipes provided the following criteria are met:

1. The inside dimensions or the base shall be such that a 60 inch diameter circle will lay flat on the manhole base floor as shown.
2. The maximum distance between any two inside corners shall be 10 feet, as shown.
3. Reinforcement and floor, wall and top thickness shall remain the same as for a normal Type III manhole base.
4. No pipe shall exceed 60 inches (inside diameter).

If any one of these criteria cannot be met, a special design will be required.

NOTES:

1. For General Manhole Notes and Details, see Standard Plan CD35.
2. Construction joints are optional where shown. Other locations are subject to approval by the Public Works Department. Key dimensions are 1½" x 3".
3. Inlet and outlet pipes shall not intercept a manhole base through a corner. If skew angle is too great to permit the opening to be made in a single wall maybe lengthened or relocated as explained in "SPECIAL APPLICATIONS OF TYPE III MANHOLE BASES" on this plan.
4. For details of precast manhole. See Standard Plan CD30.
5. For details of manhole frame and cover, See Standard Plan CD30.

Figure 4-19
Type III Manhole Base

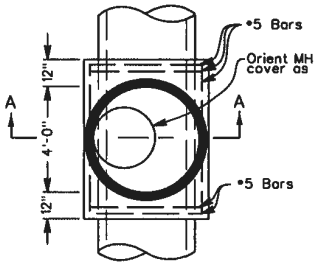

TYPICAL MANHOLE BASE
30" thru 48" Dia

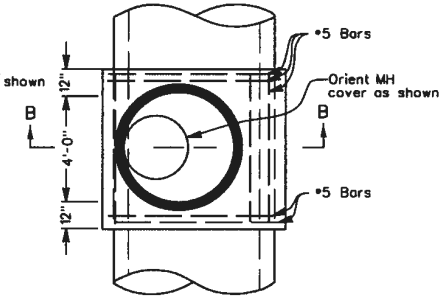

TYPICAL MANHOLE BASE
54" thru 120" Dia

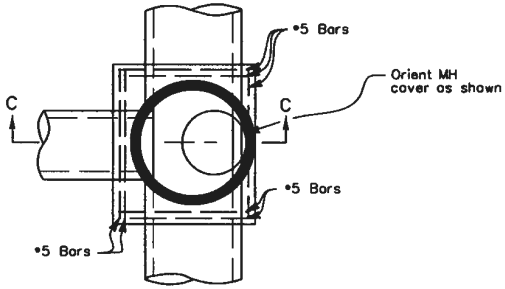

TYPICAL LATERAL CONNECTION

PUBLIC WORKS DIRECTOR

March 11, 2014

PLANS APPROVAL DATE

The County of Contra Costa or its officers or agents shall not be responsible for the accuracy or completeness of electronic copies of this plan sheet.

REGISTERED PROFESSIONAL ENGINEER
JULIA R BUEREN
No. 37937
CIVIL
STATE OF CALIFORNIA

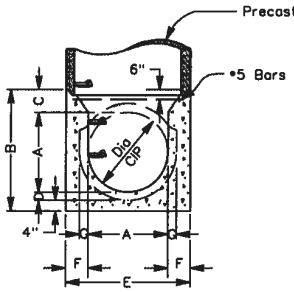

SECTION A-A

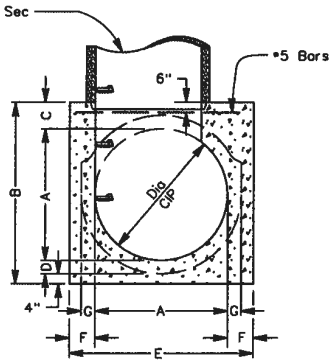

SECTION B-B

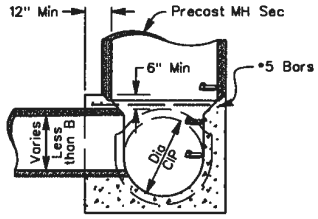

SECTION C-C

DIMENSION TABLE (in)								
A, Dia	B	C	D	E	F	G	H	J
30	46	9	3	56	13	3	56	30
36	53	9½	3½	56	10	3½	56	36
42	60	10	4	60	9	4	60	42
48	67	11	5⅛	66	9	5	60	48
54	75	11½	5½	75	10½	5½	69	48
60	82	12	6	82	11	6	70	48
66	89	12½	6½	89	11½	6½	71	48
72	96	13	7	96	12	7	72	48
84	110	14	8	110	13	8	74	48
96	124	15	9	124	14	9	76	48
120	154	18	12	154	17	12	82	48
USE OF AN "A" > 154" REQUIRES A SPECIAL DESIGN								

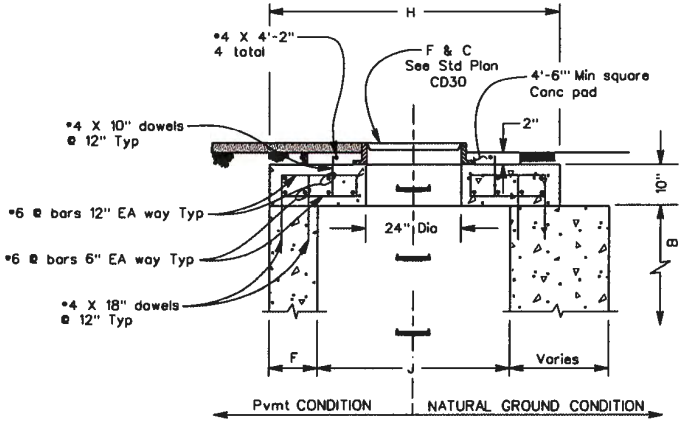

TOP SLAB

USE OF TOP SLAB:

1. When there is insufficient depth between the top of the manhole base and finish grade for a pre-cast eccentric cone manhole section.
2. Dimension "B" may be increased beyond that specified in order to conform to finish grade. Use of a larger "B" will require modifying the corresponding manhole base dimensions in accordance with the dimension table.
3. When placing a Type G or a Type J inlet on a Type IV manhole base, the opening in the top slab shall conform to the inside dimension of the inlet being placed.

NOTES:

1. For General Manhole Notes and Details, see Standard Plan CD35.
2. Clearance shall be 2" for all steel, unless otherwise noted.
3. The Type IV manhole base, shall be used only on straight runs of CIP of the same diameter.
4. For precast manhole details, see Standard Plan CD30.

NO.	DATE	REVISION DESCRIPTION	BY

COUNTY OF CONTRA COSTA
PUBLIC WORKS DEPARTMENT
MARTINEZ, CALIFORNIA

STANDARD PLAN

TYPE IV MANHOLE BASE for CIP

SCALE: NO SCALE | DATE: 3/14
DRAWN BY: H. HUSSEY | PLAN NO. CD33
CHECKED BY: M. HOLLINGSWORTH

STD. PLAN CD33

Figure 4-20
Type IV Manhole Base for CIP

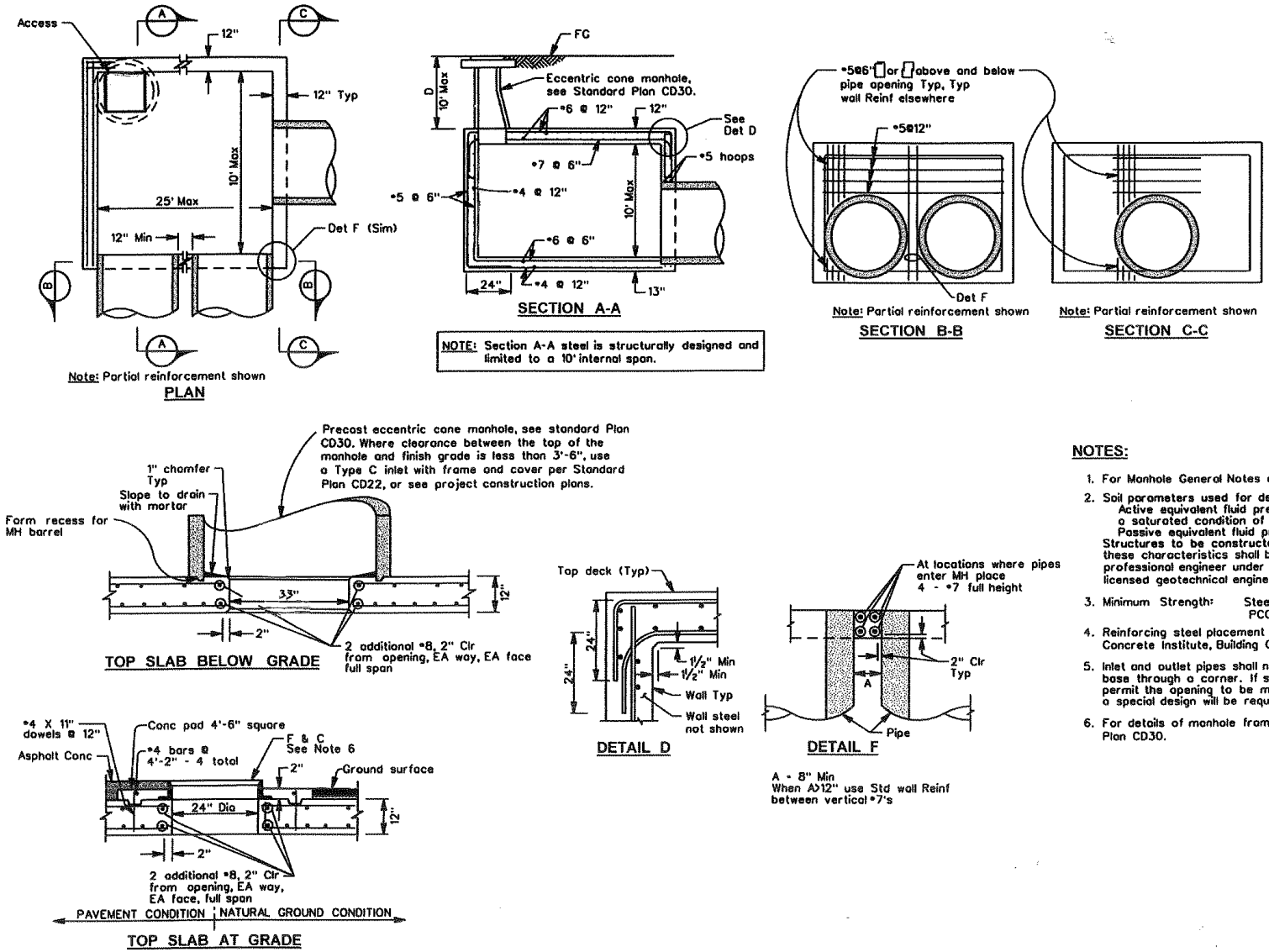

NOTES:

1. For Manhole General Notes and Details, see Standard Plan CD35
2. Soil parameters used for design are limited to the following:
   Active equivalent fluid pressure of 45 lbs./ft³ up to a saturated condition of 62 lbs./ft³.
   Passive equivalent fluid pressure of 300 lbs./ft³.
   Structures to be constructed in soils not exhibiting these characteristics shall be designed by a licensed professional engineer under consultation with a licensed geotechnical engineer.
3. Minimum Strength: Steel: f'_y=60000 psi
   PCC: f'_c=3000 psi
4. Reinforcing steel placement shall be as directed in American Concrete Institute, Building Code and Commentary 318-11.
5. Inlet and outlet pipes shall not intercept a manhole base through a corner. If skew angle is too great to permit the opening to be made through a single wall a special design will be required.
6. For details of manhole frame and cover, see Standard Plan CD30.

Figure 4-21

Type V Manhole Base

NOTES:

1. All inlets shall have a County approved "anti-pollution" plastic marker attached to the inlet as directed by the Inspector or Resident Engineer. The marker shall be applied following manufacturer's recommendations. PCC surfaces shall be mechanically cleaned just prior to attaching the marker.

2. Not used.

3. Weephole elevation varies depending on the depth of the adjoining pavement section. It shall be at, or slightly below, the pavement section subgrade elevation with a minimum depth of 18" below the curb inlet grate elevation. The side weephole detail shall be used at all "sump" locations. Edge drain or side weephole drains detail at other locations may be required as shown on the construction plans or by the Public Works Department. Where the side weephole detail or edge drains are not required, these weepholes shall conform to the front face weephole details shown on this plan.

4. 3" edge drain when shown on the plans or specified by the Public Works Department.

5. Concrete shall conform to Section 90, "Concrete", of California Department of Transportation's Standard Specifications and the following.
   - A. Construction joints shown on standard plans are permitted when top portion of inlet is to be constructed monolithically with curb and sidewalk. Key dimensions-¾" x 3".
   - B. Concrete construction joint shall be located 12" to 18" below top of curb elevation.
   - C. Concrete above construction joint shall contain a minimum of 505 lbs of cementious material per cubic yard, 1" maximum aggregate grading.
   - D. Concrete below construction joint shall contain a minimum of 590 lbs of cementious material per cubic yard, 1" maximum aggregate grading.
   - E. When inlet is constructed as a single unit concrete shall comply with item D, described above.

6. Type "I" manhole (Std Pln CD30) bases are for use with pipes to 24" in diameter and where there is sufficient cover to use minimum length manhole barrel, eccentric cone, and cover frame. Use Type "II" manhole bases (Std Pln CD31) with pipes to 42" in diameter. Type "III" manhole bases (Std Pln CD32) for 60" in diameter. Use Type "V" manhole bases (Std Pln CD34) for pipes up to 96" in diameter. For pipe larger than 96" in diameter, a special manhole base design is required.

7. Unless otherwise noted on Standard Plans all concrete shall contain not less than 590 lbs. of cementious material per cubic yard, 1" maximum grading in conformance with Section 90, "Concrete" of California Department of Transportation's Standard Specifications. Invert paving concrete shall contain not less than 505 lbs per cubic yard of cementious material, 1" maximum grading, in conformance with said Standard Specifications.

8. Inlet and outlet pipes shall not intercept a manhole base through a corner. If skew angle is too great to permit the opening to be made in a single wall face, use a Type "III" manhole base. (See Std Pln CD32).

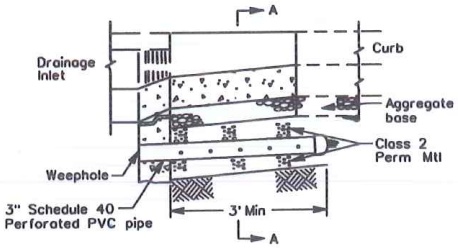

SIDE WEEPHOLE DRAIN DETAIL
See Note 3

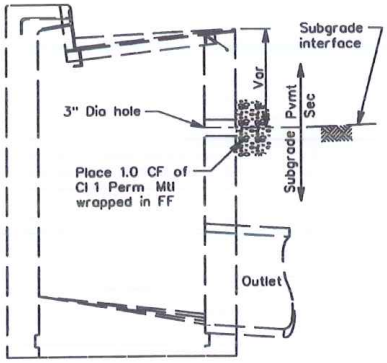

STANDARD FRONTSIDE WEEPHOLE DETAIL
See Note 3

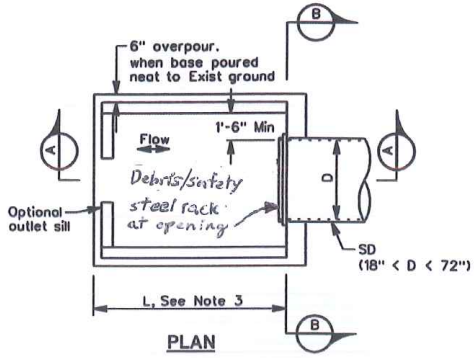

PLAN

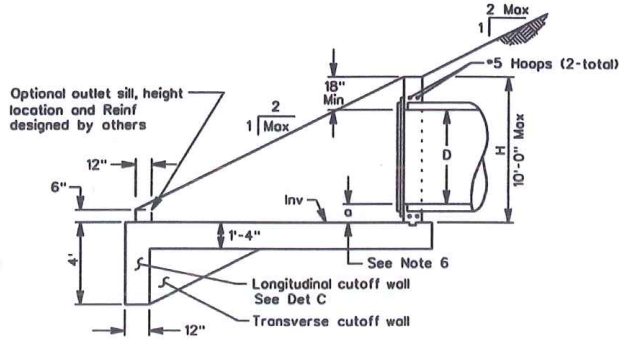

SECTION A-A

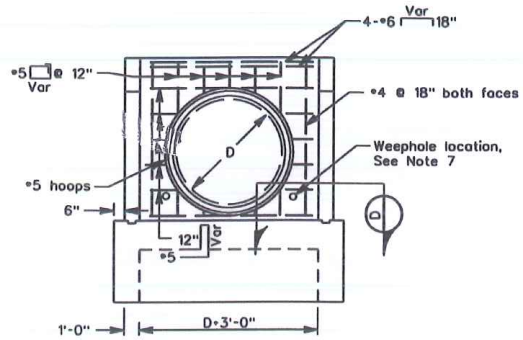

SECTION B-B

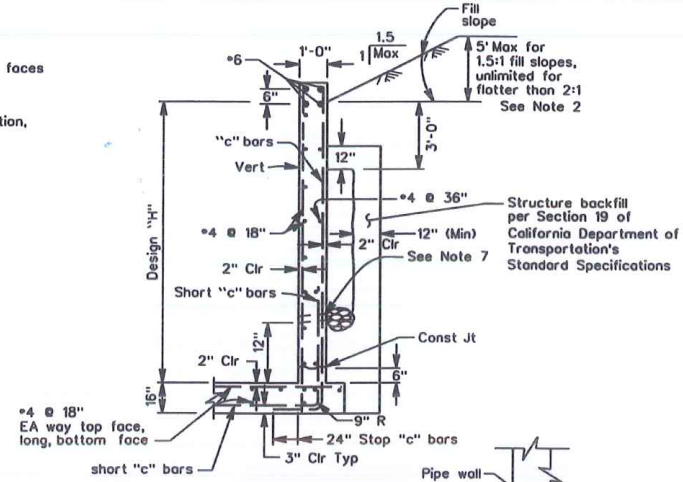

TYPICAL SECTION

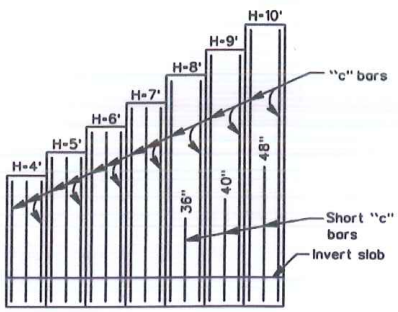

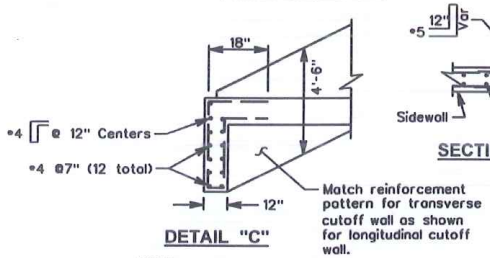

DETAIL "C"

NOTE
Slab reinforcement not shown for clarity.

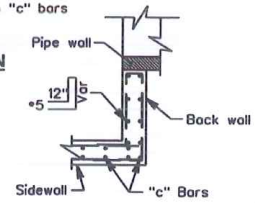

SECTION D-D

REINFORCED CONCRETE WALLS

"H" (ft)	4'	5'	6'	7'	8'	9'	10'
"c" Bars	#5@16"	#5@16"	#5@12"	#5@12"	#5@8"	#5@7"	#6@8"

GENERAL NOTES

USE:

This headwall can be used in a variety of locations: channel outlet, basin outlet/inlet, and side channel outfall. This standard plan does not address the various facets unique to its planned use, e.g. these items shall be included in the specific project construction plans approved by the Public Works Department.

Items to address include, but are not limited to:

- Safety pipe railing details for basin inlets and outlets or chain link railing details for channel outlets and outfalls. The railings placed above the pipe shall be gated to allow maintenance access unless otherwise directed by the Public Works Department.
- Adjacent rock slope protection (RSP) layout, type and dimensions.
- Pipe flowline orientation: dimensions "H" and "L": invert slope: and top of wall elevation.
- Finish grades behind walls. (A level area above the headwall may be required by the Public Works Department to service trash racks or flap gates.)
- Optional outlet sill design.

PLAN NOTES

1. Unit Stresses: f_s=24,000 psi, f_c=3600 psi.
2. Walls designed for 2' liveload surcharge, 1.5:1 sloping surcharge not to exceed 5' in elevation plus 2' liveload surcharge, or unlimited 2:1 surcharge.
3. Dimensions "H" and "L" are shown on the project or construction plans.
4. Wall height may be exceeded by 6" before going to next greater "H".
5. "D" maximum = 72", "D" minimum = 18"
6. a = 12" minimum for basin or creek inlet structures unless otherwise approved by the Public Works Department. For basin outlet structures, pipe flowline shall be depressed to match structure invert elevation.
7. See California Department of Transportation's Standard Plan B0-3 for weephole and pervious backfill details. Weephole centered either side of pipe, back wall only.

Figure 4-23
Type "M" Headwall

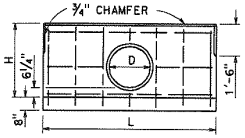

FRONT ELEVATION
SINGLE HEADWALL

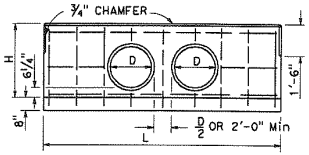

FRONT ELEVATION
DOUBLE HEADWALL

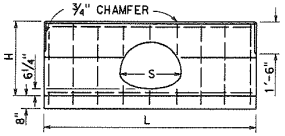

FRONT ELEVATION
SINGLE HEADWALL

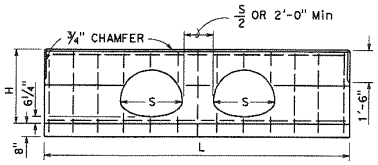

FRONT ELEVATION
DOUBLE HEADWALL

Olst	COUNTY	ROUTE	POST MILES TOTAL PROJECT	SHEET No.	TOTAL SHEETS

REGISTERED CIVIL ENGINEER

May 20, 2011
PLANS APPROVAL DATE

THE STATE OF CALIFORNIA OR ITS OFFICERS OR AGENTS SHALL NOT BE RESPONSIBLE FOR THE ACCURACY OR COMPLETENESS OF SCANNED COPIES OF THIS PLAN SHEET.

REGISTERED PROFESSIONAL ENGINEER
Glenn DeCou
No. C34547
Exp. 9-30-11
CIVIL
STATE OF CALIFORNIA

D	H	SINGLE L	SINGLE STEEL LB	SINGLE Conc CY	DOUBLE L	DOUBLE STEEL LB	DOUBLE Conc CY
12"	2'-8"	5'-0"	35	0.60	8'-0"	50	0.94
15"	2'-11"	6'-0"	40	0.75	9'-6"	60	1.17
18"	3'-2"	7'-0"	50	0.91	10'-6"	75	1.35
21"	3'-5"	7'-6"	60	1.02	11'-6"	90	1.52
24"	3'-8"	8'-6"	75	1.20	12'-6"	100	1.72
27"	3'-11"	9'-6"	85	1.39	14'-0"	115	2.00
30"	4'-2"	10'-0"	90	1.52	15'-0"	126	2.21
33"	4'-5"	11'-0"	100	1.73	16'-0"	130	2.42
36"	4'-8"	12'-0"	105	1.95	17'-0"	145	2.65
39"	4'-11"	12'-6"	130	2.09	18'-0"	170	2.88
42"	5'-2"	13'-6"	140	2.34	19'-0"	185	3.13
45"	5'-5"	14'-6"	150	2.60	20'-0"	195	3.38
48"	5'-8"	15'-0"	160	2.75	21'-0"	200	3.64
51"	5'-11"	16'-0"	180	3.03	22'-6"	225	4.02
54"	6'-2"	17'-0"	190	3.31	23'-6"	240	4.30

STRAIGHT HEADWALLS

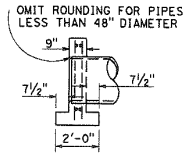

SECTION, SINGLE
AND DOUBLE HEADWALLS

CMP ARCH SIZE	H	SINGLE L	SINGLE STEEL LB	SINGLE Conc CY	DOUBLE L	DOUBLE STEEL LB	DOUBLE Conc CY
21" x 15"	2'-11"	6'-6"	45	0.80	10'-0"	60	1.22
24" x 18"	3'-2"	7'-6"	50	0.96	11'-6"	70	1.45
28" x 20"	3'-4"	8'-6"	60	1.12	13'-6"	90	1.76
35" x 24"	3'-8"	10'-6"	85	1.47	15'-6"	120	2.16
42" x 29"	4'-1"	12'-6"	110	1.76	18'-0"	145	2.57
49" x 33"	4'-5"	14'-6"	130	2.26	21'-0"	170	3.13
57" x 38"	4'-10"	17'-0"	155	2.81	24'-6"	210	3.86
64" x 43"	5'-3"	19'-0"	175	3.31	27'-0"	230	4.42
71" x 47"	5'-7"	21'-0"	195	3.81	30'-0"	255	5.09

STRAIGHT HEADWALLS

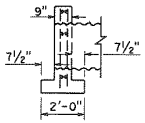

SECTION, SINGLE
AND DOUBLE HEADWALLS

NOTES:

1. No deduction made in quantities for thickness of pipe walls.
2. All reinforcing steel #4 bars. All vertical and horizontal tie bars 1'-6" maximum spacing.
3. Length of wall "W" may be varied to suit conditions encountered in the field, and straight line interpolation may be used to calculate quantities.
4. Quantities are for design purposes only.
5. Cable railing to be installed on top of headwall when shown on Project Plans. See Standard Plan B11-47 for cable railing details.

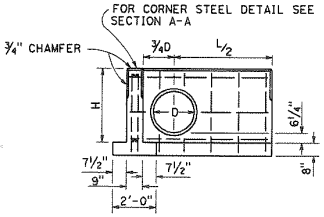

FRONT ELEVATION "L" HEADWALL

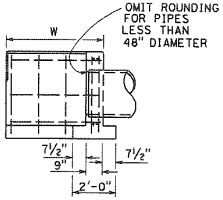

SECTION "L" HEADWALL

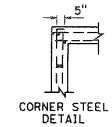

SECTION A-A

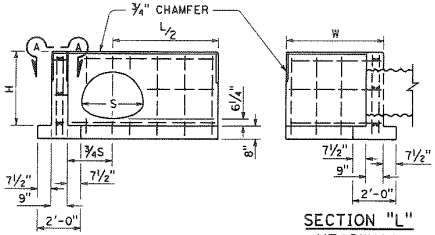

FRONT ELEVATION
"L" HEADWALL

SECTION "L"
HEADWALL

D	H	L/2	LENGTH OF W 3'-4" STEEL LB	3'-4" Conc CY	4'-10" STEEL LB	4'-10" Conc CY	6'-4" STEEL LB	6'-4" Conc CY	7'-10" STEEL LB	7'-10" Conc CY	9'-4" STEEL LB	9'-4" Conc CY
12"	2'-8"	2'-6"	50	0.79	60	0.98	—	—	—	—	—	—
15"	2'-11"	3'-0"	55	0.91	65	1.11	—	—	—	—	—	—
18"	3'-2"	3'-6"	65	1.04	75	1.25	—	—	—	—	—	—
21"	3'-5"	3'-9"	75	1.15	90	1.36	—	—	—	—	—	—
24"	3'-8"	4'-3"	85	1.29	100	1.51	110	1.74	—	—	—	—
27"	3'-11"	4'-9"	90	1.44	105	1.67	115	1.91	—	—	—	—
30"	4'-2"	5'-0"	95	1.55	110	1.80	120	2.05	135	2.29	—	—
33"	4'-5"	5'-6"	105	1.71	120	1.97	135	2.23	150	2.48	—	—
36"	4'-8"	6'-0"	110	1.88	125	2.15	140	2.41	155	2.68	170	2.95
39"	4'-11"	6'-3"	—	—	150	2.28	170	2.56	185	2.84	200	3.12
42"	5'-2"	6'-9"	—	—	155	2.42	175	2.76	190	3.05	210	3.34
45"	5'-5"	7'-3"	—	—	—	—	180	2.97	200	3.27	215	3.57
48"	5'-8"	7'-6"	—	—	—	—	190	3.13	215	3.44	230	3.75
51"	5'-11"	8'-0"	—	—	—	—	—	—	220	3.67	235	3.99
54"	6'-2"	8'-6"	—	—	—	—	—	—	235	3.91	250	4.24

"L" HEADWALLS
CIRCULAR PIPE CULVERT HEADWALLS

CMP ARCH SIZE	H	L/2	LENGTH OF W 3'-4" STEEL LB	3'-4" Conc CY	4'-10" STEEL LB	4'-10" Conc CY	6'-4" STEEL LB	6'-4" Conc CY	7'-10" STEEL LB	7'-10" Conc CY	9'-4" STEEL LB	9'-4" Conc CY
21" x 15"	2'-11"	3'-3"	60	1.00	65	1.18	75	1.38	90	1.58	100	1.77
24" x 18"	3'-2"	3'-9"	60	1.07	70	1.32	80	1.53	95	1.74	110	1.94
28" x 20"	3'-4"	4'-3"	70	1.26	80	1.47	90	1.68	100	1.90	115	2.11
35" x 24"	3'-8"	5'-3"	100	1.51	110	1.74	120	1.97	140	2.20	155	2.42
42" x 29"	4'-1"	6'-3"	115	1.82	130	2.06	140	2.31	155	2.55	170	2.83
49" x 33"	4'-5"	7'-3"	130	2.12	145	2.37	155	2.64	170	2.90	185	3.15
57" x 38"	4'-10"	8'-6"	145	2.52	160	2.79	175	3.07	190	3.35	205	3.61
64" x 43"	5'-3"	9'-6"	185	2.89	200	3.11	215	3.48	235	3.77	250	4.06
71" x 47"	5'-7"	10'-6"	200	3.25	215	3.56	235	3.86	250	4.17	270	4.48

"L" HEADWALLS
CORRUGATED METAL PIPE ARCH CULVERT HEADWALLS

STATE OF CALIFORNIA
DEPARTMENT OF TRANSPORTATION

PIPE CULVERT HEADWALLS STRAIGHT AND "L"

NO SCALE

D89

2010 STANDARD PLAN D89

6-9-09

Figure 4-24
Pipe Culvert Headwalls Straight and "L"

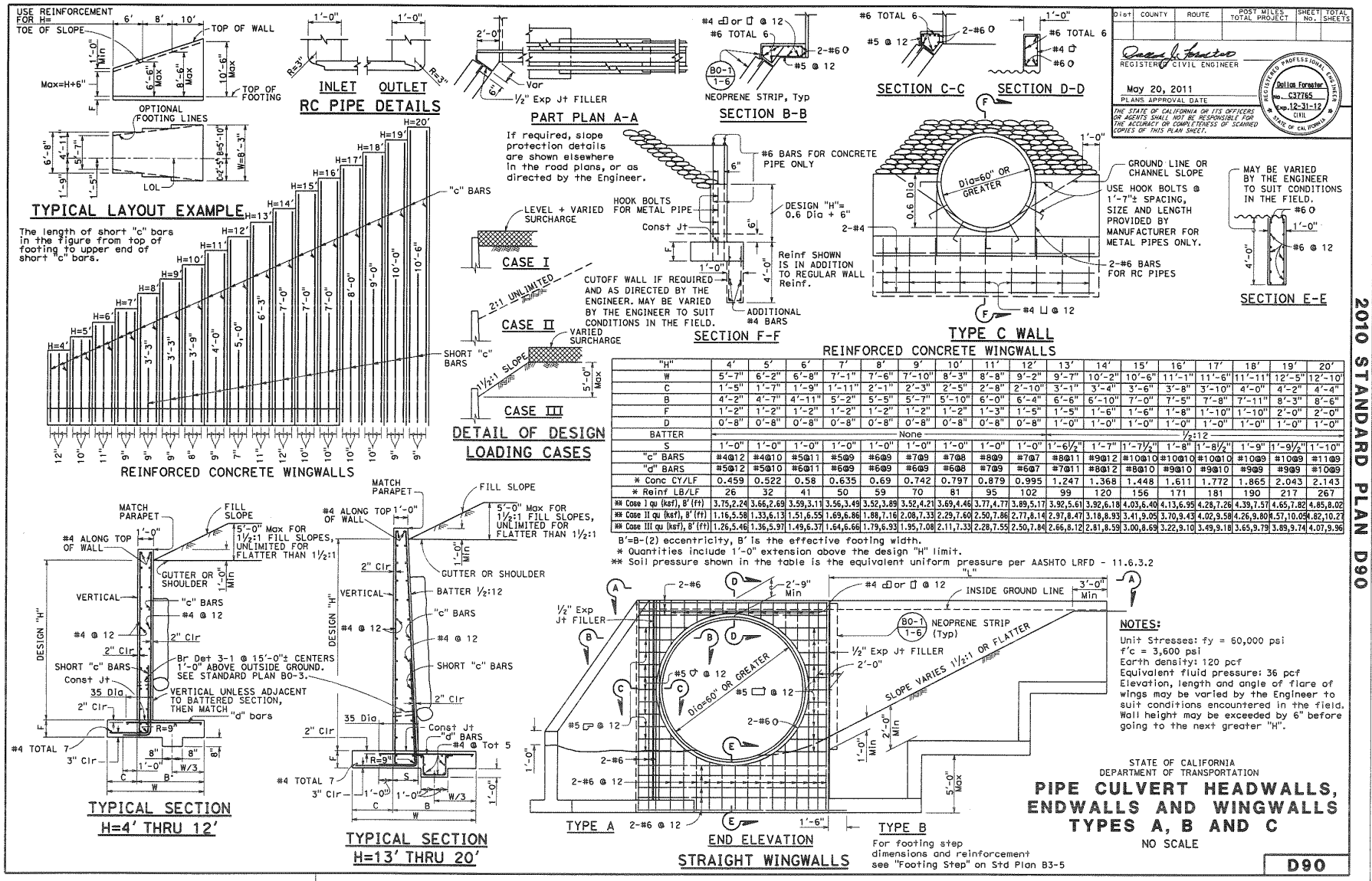

"H"	4'	5'	6'	7'	8'	9'	10'	11'	12'	13'	14'	15'	16'	17'	18'	19'	20'
W	5'-7"	6'-2"	6'-8"	7'-1"	7'-6"	7'-10"	8'-3"	8'-8"	9'-2"	9'-7"	10'-2"	10'-6"	11'-1"	11'-6"	11'-11"	12'-5"	12'-10"
C	1'-5"	1'-7"	1'-9"	1'-11"	2'-1"	2'-3"	2'-5"	2'-8"	2'-10"	3'-1"	3'-4"	3'-6"	3'-8"	3'-10"	4'-0"	4'-2"	4'-4"
B	4'-2"	4'-7"	4'-11"	5'-2"	5'-5"	5'-7"	5'-10"	6'-0"	6'-4"	6'-6"	6'-10"	7'-0"	7'-5"	7'-8"	7'-11"	8'-3"	8'-6"
F	1'-2"	1'-2"	1'-2"	1'-2"	1'-2"	1'-2"	1'-2"	1'-3"	1'-5"	1'-5"	1'-6"	1'-6"	1'-8"	1'-10"	1'-10"	2'-0"	2'-0"
D	0'-8"	0'-8"	0'-8"	0'-8"	0'-8"	0'-8"	0'-8"	0'-8"	0'-8"	1'-0"	1'-0"	1'-0"	1'-0"	1'-0"	1'-0"	1'-0"	1'-0"
BATTER	None									½:12							
S	1'-0"	1'-0"	1'-0"	1'-0"	1'-0"	1'-0"	1'-0"	1'-0"	1'-0"	1'-6½"	1'-7"	1'-7½"	1'-8"	1'-8½"	1'-9"	1'-9½"	1'-10"
"c" BARS	#4@12	#4@10	#5@11	#5@9	#6@9	#7@9	#7@8	#8@9	#7@7	#8@11	#9@12	#10@10	#10@10	#10@10	#10@9	#10@9	#11@9
"d" BARS	#5@12	#5@10	#6@11	#6@9	#6@9	#6@9	#6@8	#7@9	#6@7	#7@11	#8@12	#8@10	#9@10	#9@10	#9@9	#9@9	#10@9
* Conc CY/LF	0.459	0.522	0.58	0.635	0.69	0.742	0.797	0.879	0.995	1.247	1.368	1.448	1.611	1.772	1.865	2.043	2.143
* Reinf LB/LF	26	32	41	50	59	70	81	95	102	99	120	156	171	181	190	217	267
** Case I qu (ksf), B'(ft)	3.75,2.24	3.66,2.69	3.59,3.11	3.56,3.49	3.52,3.89	3.52,4.21	3.69,4.46	3.77,4.77	3.89,5.17	3.92,5.61	3.92,6.18	4.03,6.40	4.13,6.95	4.28,7.26	4.39,7.57	4.65,7.82	4.85,8.02
** Case II qu (ksf), B'(ft)	1.16,5.58	1.33,6.13	1.51,6.55	1.69,6.86	1.88,7.16	2.08,7.33	2.29,7.60	2.50,7.86	2.77,8.14	2.97,8.47	3.18,8.93	3.41,9.05	3.70,9.43	4.02,9.58	4.26,9.80	4.57,10.05	4.82,10.27
** Case III qu (ksf), B'(ft)	1.26,5.46	1.36,5.97	1.49,6.37	1.64,6.66	1.79,6.93	1.95,7.08	2.11,7.33	2.28,7.55	2.50,7.84	2.66,8.12	2.81,8.59	3.00,8.69	3.22,9.10	3.49,9.18	3.65,9.79	3.89,9.74	4.07,9.96

REINFORCED CONCRETE WINGWALLS

B'=B-(2) eccentricity, B' is the effective footing width.
* Quantities include 1'-0" extension above the design "H" limit.
** Soil pressure shown in the table is the equivalent uniform pressure per AASHTO LRFD - 11.6.3.2

Figure 4-25

Pipe Culvert Headwalls, Endwalls and Wingwalls Types A, B, and C

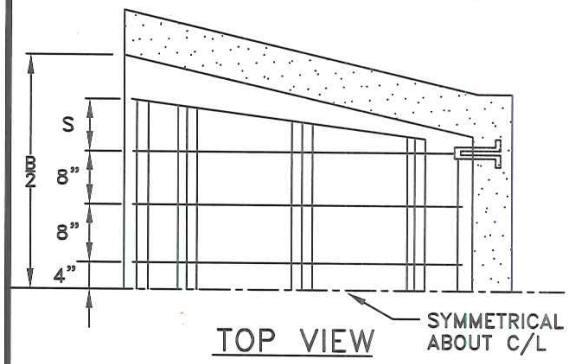

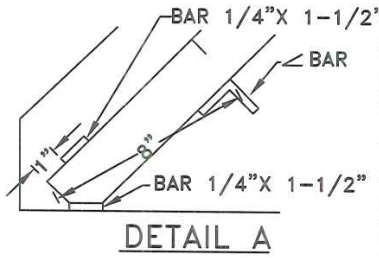

TRASH RACK DEMENSIONS

DIA.	NUMBER & SIZE BAR A	NUMBER & SIZE L BAR	L	L'	S	H
33"	8-3/8 X 2 1/2	3-2 X 2 X 1/4	5'-1"	1'-10"	8"	3"-8"
36"	"	"	5'-4"	1'-11"	8"	3'-10"
42"	9-3/8 X 2 1/2	"	5'-11"	2'-3"	9"	4'-4"
48"	"	4-2 X 2 X 1/4	6'-7"	1'-9"	10"	4'-10"
54"	10-3/8 X 3	4-3 X 3 X 1/4	7'-9"	2'-1 1/2"	10 1/2"	5'-8"
60"	11-3/8 X 3 1/2	"	8'-5"	2'-4"	11"	6'-2"

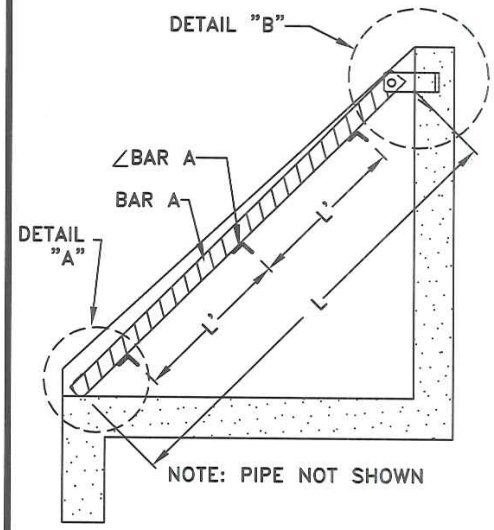

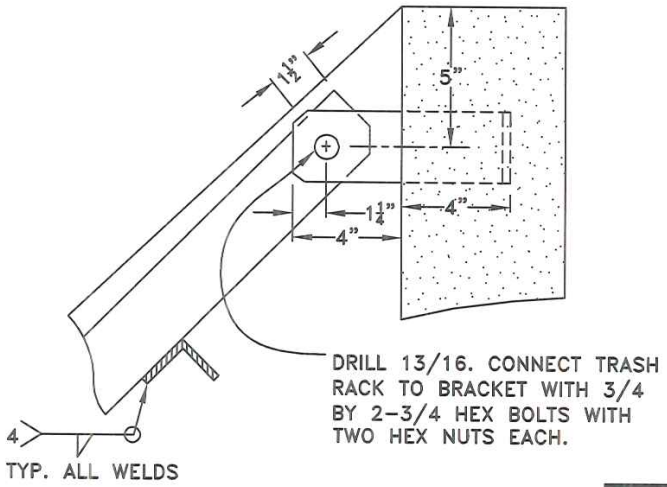

NOTES

1. THIS TRASH RACK MAY BE USED WITH PIPE INLET STRUCTURES.
2. MATERIAL TO CONFORM TO ASTM DESIGNATION A-36.
3. 'S' MAY VARY WITH 'B'. SEE PLATE.
4. ALL FILLET WELDS TO BE 3/16"
5. TWO HINGES REQUIRED FOR 33, 36 & 42 INCH PIPES. THREE HINGES REQUIRED FOR 48, 54 & 60 INCH PIPES.

INLET TRASH RACK
33" PIPE OR LARGER

SCALE: NONE
REVISED: JANUARY 1. 2010

DR-15

Figure 4-26
Inlet Trash Rack 33" Pipe or Larger

5 ADMINISTRATION

5.1 THE PERMIT PROCESS

The permit process described below applies to all development proposed within the Specific Plan area. **Figure 5-1, Specific Plan Permit Process**, is a graphic illustration of this process. Each element of the permit process is described in greater detail in State law, the Tracy Municipal Code, and applicable City standards. The review process for each type of development application shall be as specified in the Tracy Municipal Code, except as modified herein.

5.1.1 Tracy Hills Design Guidelines

The purpose of the Tracy Hills Design Guidelines is to ensure that all development achieves and maintains a high standard of aesthetic quality, appearance, and sustainability throughout the development lifetime of Tracy Hills. The Design Guidelines will establish the overall aesthetic standards for community design, landscape design, and architectural design, and will apply to all projects within the Specific Plan area (refer to Chapter 3, Design Guidelines) that are subject to Development Review.

5.1.2 Development Review

The Development Review processing procedures are set forth in the Tracy Municipal Code, Chapter 10.08, except as modified herein. The regulations contained in this Specific Plan shall apply to all development. If the Specific Plan development regulations conflict with the Tracy Municipal Code, the regulations set forth herein shall prevail.

Construction of any new single-family or two-family dwelling is subject to Development Review. Additions, improvements or repairs to a single-family or two-family dwelling are not subject to Development Review. Development Review shall be required for any other improvements as specified by the Tracy Municipal Code.

For Development Review of a residential subdivision, or a portion of a residential subdivision, an exhibit showing the distribution of house types (i.e., floor plan type and elevation type) throughout the subdivision is required as part of the Development Review process.

The Community Gateway Icon, which is conceptually described and depicted in Section 3.4.5, Community Monumentation, shall be subject to Development Review approval by City Council, with a recommendation by Planning Commission.

5.1.3 Conditional Use Permits

Land uses and densities permissible for each parcel within the Specific Plan area zoning districts are identified in Chapter 2, Zoning and Development Standards, Sections 2.1 through 2.5. Specified conditional uses shall be permitted subject to the approval of a Conditional Use Permit. Because these uses have potentially incompatible characteristics, conditional uses require special consideration and may necessitate imposition of certain conditions on the development.

The process for applications is described in the City of Tracy Municipal Code, Section 10.08.42.50, et seq.

5.1.4 Tentative Maps

Tentative Subdivision Maps shall be submitted to the Development Services Department in accordance with State law, the Tracy Municipal Code, applicable City standards, and Subdivision Map Act.

The submittal requirement of conceptual architectural elevations for Vesting Tentative Subdivision Maps has been satisfied by the Tracy Hills Specific Plan, and Section 3.2, Residential Design Guidelines. Review of the architectural elevations for specific development proposals will be addressed through the Development Review process.

The form and content of the Final Map shall conform to the requirements of the Tracy Municipal Code and State law.

5.1.5 180 to 185-Acre Open Space Area

Prior to approval of any Tentative Subdivision Map for property south of I-580, the location of the 180 to 185-acre open space area shall be approved by the Planning Commission.

5.1.6 Development Phases other than Phase 1A

This Tracy Hills Specific Plan only shows detailed plans for Phase 1A, as specified in Section 3.4, Landscape Design Guidelines. Therefore, prior to development of any non-agricultural use in areas other than Phase 1A, a Specific Plan Amendment shall be required, which shall include, but not be limited to, the following elements (as it relates to design and location):

- Circulation
- Community Monumentation
- Streetscape and Trails
- Edge Conditions/ Easements
- Conceptual Overall Illustrative Parks and Landscape Plan
- Lighting
- Walls and Fences
- Landscape Master Tree Plan

Figure 5-1
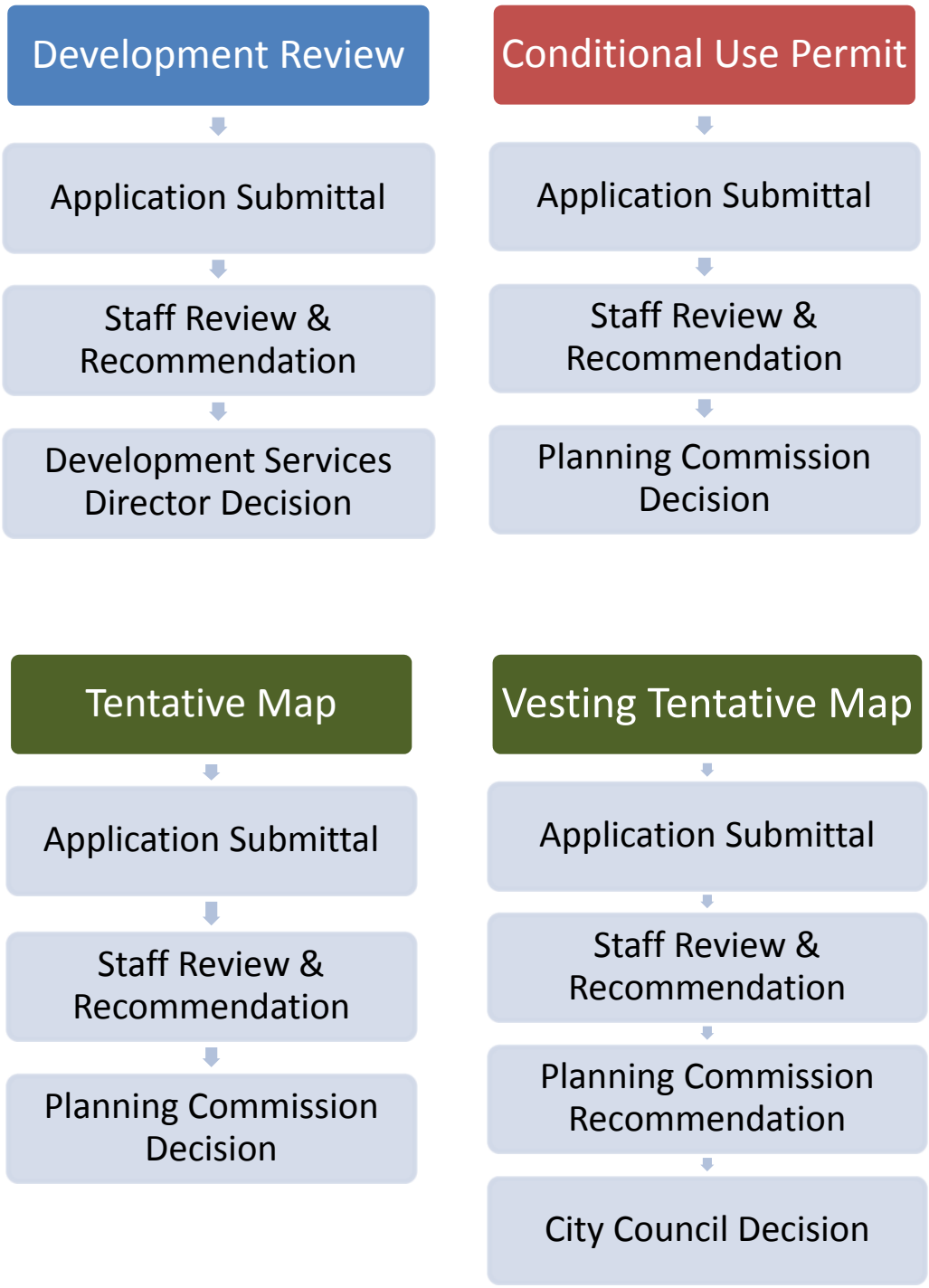
Specific Plan Permit Process