# City of Tracy

TRACY

Think Inside the Triangle™

# I-205 CORRIDOR SPECIFIC PLAN

WITH AMENDMENTS:

| | | |
|---|---|---|
| 1-99-SPA | Reso 99-240 | Major I-205 Specific Plan Amend. |
| 2-01-SPA | Reso 2001-204 | Mall Signage / Barnes & Noble PUD |
| 1-01-SPA | Reso 2001-250 | I-205 Corridor Signage |
| 3-01-SPA | Reso 2001-333 | Land Uses & Building Setbacks |
| 4-01-SPA | Reso 2001-396 | Freeway Signs |
| 2-03-SPA | Reso 2003-184 | Wall Signs |
| 3-04-SPA | Reso 2004-232 | Director Approval of Sign Amends. |
| 5-04-SPA | Reso 2005-125 | Site Specific Land Use Amendment |
| 1-02-SPA | Reso 2007-060 | Winco Site Land Use Change |
| 2-07-SPA | Reso 2007-187 | Pavilion Parkway Building Setbacks |
| SPA0-0002 | Reso 2009-242 | Permitted/Conditionally Permitted Uses |
| 2-11-SPA | Reso 2011-211 | Annexation for the Filios/Dobler & Dev. Project |
| SPA12-0001 | Reso 2012-085 | Wall Signs |
| SPA12-0002 | Reso 2012-092 | Freeway Signs |
| SPA12-0005 | Reso 2012-254 | Eating/Drinking Establishments w/Entertainment |
| SPA12-0004 | Reso 2013-031 | Land Use Designation/High Density Residential |

# City of Tracy

# I-205 Corridor Specific Plan Amendment

Approved by City Council on
July 6, 1999 by
Resolution No. 99-240

Harris & Associates

Program Managers
Construction Managers
Civil Engineers

# I-205 CORRIDOR SPECIFIC PLAN AMENDMENT

**Approved by City Council on**
**July 6, 1999 by**
**Resolution No. 99-240**

## TABLE OF CONTENTS


1. INTRODUCTION

- 1.1 Planning Area Location and Description
- 1.2 Factor Influencing Specific Plan Concept
- 1.3 Purpose and Intent of the Specific Plan
- 1.4 How to use this Specific Plan

2. SPECIFIC PLAN GOALS AND OBJECTIVES

- 2.1 Urban Design Goals and Objectives
  - 2.1.1 Relationship of the Plan to the Tracy Proper
  - 2.1.2 Relationship of the Plan to the Freeway Corridor
  - 2.1.3 Relationships Internal to the Plan
  - 2.1.4 Circulation Design Goals
  - 2.1.5 Open Space and Pedestrian Goals

3. DEVELOPMENT PLAN CONCEPTS

- 3.1 Land Use Concepts - Description of the Specific Plan
  - 3.1.1 Grant Line Planning Area
  - 3.1.2 MacArthur Planning Area
- 3.2 The Relationship of the Proposed Regional Shopping Center and Downtown Tracy
- 3.3 Traffic Circulation Concepts
  - 3.3.1 Circulation Purpose and Facilities
  - 3.3.2 Level of Service Concepts
  - 3.3.3 Traffic Volumes and Flow Conditions
- 3.4 Parks and Open Space Concepts
  - 3.4.1 Parks
  - 3.4.2 Pedestrian and Bikeway System
- 3.5 Storm Drainage Concepts
  - 3.5.1 Hydrology and FEMA Flood Zones
  - 3.5.2 Collection and Discharge Systems
- 3.6 Irrigation District Concepts
- 3.7 Utilities Concepts
  - 3.7.1 Wastewater
    - 3.7.1.1 Treatment
    - 3.7.1.2 Collection
  - 3.7.2 Municipal Water System
    - 3.7.2.1 Water Supply and Treatment
    - 3.7.2.2 Water Distribution System
  - 3.7.3 Other Utilities

3.8 Solid Wastes
3.9 Air Quality Concepts
3.10 Public Facilities and Fire Services
3.11 Public Buildings

4. DESIGN STANDARDS AND GUIDELINES

4.1 Land Use
4.1.1 Residential Uses
4.1.1.1 Affordable and Equal Opportunity Housing
4.1.1.2 Planning Overview
4.1.1.3 Residential Standards
4.1.2 Commercial and Industrial Uses
4.1.2.1 Overview
4.1.2.2 General Commercial and Industrial Standards
4.1.2.3 Commercial Standards
4.1.2.4 Commercial Center Design Guidelines
4.1.2.5 Industrial Standards
4.1.3 Public Facilities Standards
4.1.4 Public Schools
4.2 Circulation
4.2.1 Roadway Standards
4.2.2 Driveway and Intersection Standards
4.2.3 Intersection Signalization
4.2.4 Grant Line Road/I-205 Interchange
4.2.5 Parking Standards
4.2.5.1 Off-Street Parking - Residential
4.2.5.2 On-Street Parking
4.2.6 Transportation Systems Management (TSM)
4.2.7 Truck Routes
4.3 Urban Design
4.3.1 Overview
4.3.2 Entries
4.3.3 Streetscape Standards and Guidelines
4.3.4 Street Furniture and Lighting
4.3.5 Freeway Interface
4.4 Parks and Open Space Standards and Guidelines
4.4.1 Park Standards and Guidelines
4.4.2 Pedestrian and Bikeway System
4.4.2.1 Bikeways
4.4.2.2 Pedestrian Routes
4.4.3 Drainageways
4.5 Building in FEMA Floodplain

5. IMPLEMENTATION OF THIS SPECIFIC PLAN

5.1 Development Plan Processing
5.1.1 Introduction
5.1.2 Implementation
5.1.2.1 Environmental Review

5.1.2.2 Approval of Preliminary and Final Development Plans
5.1.2.3 Tentative and Final Maps - Improvement Agreements
5.1.2.4 Building and Occupancy Permits
5.1.3 Amending the Specific Plan
5.2 Capital Improvement Plan
5.3 Specific Plan Financing
5.3.1 Overview
5.3.2 Financing Methods
5.3.2.1 Cost Allocations
5.3.2.2 History of District Formations
5.3.2.3 Finance Plans
5.3.2.4 Redevelopment Tax Income and Financing
5.3.2.5 Certificates of Participation
5.3.2.6 Hansen Sanitary Sewer Project
5.3.3 Sources of Annual Revenue
5.3.3.1 Assessment Liens
5.3.3.2 Development Impact Fees
5.3.4 The Financing Concept
5.3.5 The Financing Program
5.3.5.1 Sewer and Water System Infrastructure Financing
5.3.5.2 I-205 Freeway Interchange Financing
5.3.5.3 The Project Specific Infrastructure Financings
5.3.6 Summary

## APPENDIX A

## LIST OF TABLES

3.1 Proposed Maximum I-205 Specific Plan Gross Floor Areas
3.2 Summary of Specific Plan and Land Uses-By Plan Area
3.3 Grant Line Planning Area Land Use Distribution
3.4 MacArthur Planning Area Land Use Distribution
3.5 Arterial and Collector Streets in the I-205 Specific Plan
3.6 Being Revised
4.4 Bikeways

## LIST OF FIGURES

1.1. Project Site Location
1.2. Location map
1.3. Land Ownership
3.1a Land Use - Grant Line Planning Area - North
3.1b Tracy Auto Mall
3.1c Land Use - Grant Line Planning Area - South
3.1d Land Use - MacArthur Planning Area
3.2a Roadways - Grant Line Planning Area (Phase I)
3.2b Roadways - Grant Line Planning Area (Phase II)
3.2c Roadways - MacArthur Planning Area
3.3 Bicycle Circulation

3.4 FEMA Flood Zones
3.5a Storm Drainage - Grant Line Planning Area
3.5b Storm Drainage - MacArthur Planning Area
3.6a Irrigation - Naglee Burk Irrigation District - Grant Line Planning Area
3.6b Irrigation - Pescadero Reclamation District - MacArthur Planning Area
3.7a Sanitary Sewer Collection - Grant Line Planning Area
3.7b Sanitary Sewer Collection - MacArthur Planning Area
3.8a Water Distribution - Grant Line Planning Area
3.8b Water Distribution - MacArthur Planning Area
3.8c Water Distribution - Off-Site
4.1 Low Density Development
4.2 Medium Density Development
4.3 Corner Lot Treatment with Small Lots
4.4 Open Cul-de-sac Plan
4.5 Multi Family Street Orientation
4.6 High Density Site Concept
4.7 Multi & Family/High Density Parking Concepts
4.8 Temporary Sign Design Concepts
4.9 Coordinating Fence Heights
4.10 Minimum Setback Driveway
4.11 Typical Ganged Driveway
4.12 Shopping Center Prototype I
4.13 Shopping Center Prototype II
4.14 Restaurant/Service Station Prototype
4.15 Light Manufacturing/Warehouse and Van Court/Flex Tech Prototypes
4.16 Auto Service Prototype
4.17a Road Cross Section: Grant Line Planning Area – Grant Line Road / Lammers to Street "A"
4.17b Road Cross Section: Grant Line Planning Area – Grant Line Road / Street "A" to Naglee Road
4.17c Road Cross Section: Grant Line Planning Area – Grant Line Road / Naglee Road to I-205
4.18a Road Cross Section: Grant Line Planning Area – Grant Line Road / Below I-205
4.18b Road Cross Section: Grant Line Planning Area – Grant Line Road / I-205 to Corral Hollow Road
4.19a Road Cross Section: Grant Line Planning Area – Corral Hollow Road / Byron to Lowell
4.19b Road Cross Section: Grant Line Planning Area – Corral Hollow Road / Lowell to Grant Line Road
4.20 Road Cross Section: Grant Line Planning Area – Corral Hollow Road / Grant Line road to I-205
4.21a Road Cross Section: Grant Line Planning Area – Corral Hollow Road / Below I-205
4.21b Road Cross Section: Grant Line Planning Area – Corral Hollow Road / I-205 to mall Entry #4
4.22 Road Cross Section: Grant Line Planning Area – Naglee Road / Grant Line Toad to Mall Entry #3
4.23a Road Cross Section: Grant Line Planning Area – Naglee Road / Mall Entry #3 to Street "C"
4.23b Road Cross Section: Grant Line Planning Area – Street "C" / Naglee to Corral Hollow
4.24 Road Cross Section: Grant Line Planning Area – Street "B" / Naglee Road to Street "A"
4.25 Road Cross Section: Grant Line Planning Area – Street "A" / Grant Line to Street "B"
4.26 Road Cross Section: Grant Line Planning Area – Robertson Drive
4.27 Road Cross Section: Grant Line Planning Area – Auto Plaza Drive/Auto Plaza Way/Street A
4.28a Road Cross Section: MacArthur Planning Area – Pescadero Avenue / MacArthur to Mall Entry #1
4.28b Road Cross Section: MacArthur Planning Area – Pescadero Avenue / Mall Entry #1 to M4 East PL
4.28c Road Cross Section: MacArthur Planning Area – MacArthur Drive / Grant Line to Pescadero
4.28d Road Cross Section: MacArthur Planning Area – MacArthur Drive / Pescadero to I-205
4.28e Road Cross Section: MacArthur Planning Area – MacArthur Drive / Below I-205
4.28f Road Cross Section: MacArthur Planning Area – MacArthur Drive / North of I-205 to Arbor

4.29a Road Cross Section: Grant Line Planning Area – Street "F" (Joe Pombo Pkwy) / Lowell to Pombo West PL
4.29b Road Cross Section: Grant Line Planning Area – Street "F" (Joe Pombo Pkwy)/ at Grant Line
4.30 Road Cross Section: Grant Line Planning Area – Street "S" / End to Street "F (Joe Pombo Pkwy)
4.31 Road Cross Section: Grant Line Planning Area – Lowell Avenue / Cul-de-sac to Corral Hollow
4.32 Typical Residential Street / Minor Collector
4.33 Freeway Interchange
4.34 Driveway Guidelines
4.35 Park and Ride Facility
4.36 Entry Locations
4.37 City Entry
4.38 Monolith Sign Wall
4.39 Major Entry
4.40 Monolith Signage Walls
4.41 Secondary Community Entry Prototype
4.42 Theme Intersection
4.43 Typical Neighborhood Entry
4.44 Sight Line Clearances at Corners
4.45 Typical Street Tree Pattern
4.46 Streetscape Concepts
4.47 Parkway Furniture
4.48 Residential Lighting Concepts
4.49 Freeway Edge Concepts
4.50 Elementary School and Park Prototype
4.51 Open Space Awareness from Major Roads and Entries
4.52 Mini Park Prototype
4.53 Class I Bike Paths / Class II Bike Lanes
4.54 Drainage Section
5.1 Development Processing

# CHAPTER 1 - INTRODUCTION

## 1. INTRODUCTION

Until the 1970's, Tracy was an agricultural town dependent on two-lane roads and the railroad for movement of goods and services. As Tracy approaches a new century, the railroad is still a major factor in town, as is the agribusiness, however, the major transportation network are freeways which form a triangle around the city. The major corridor through Tracy is I-205, along which commercial and industrial activities have developed. As the significance of this corridor has grown as a commercial and industrial center, and as a major east-west artery, the planning of lands adjacent to I-205 have become of paramount importance.

In the spring of 1986 the Tracy Economic Development Committee requested the Tracy City Council to explore the potential for commercial and industrial development of properties adjacent to Interstate Highway 205 (I-205) and abutting the City's northern limits. The City Council recognized the importance of the visibility, access and development potential of these properties and directed City Staff to investigate planning alternatives for the area. In May 1987 an agreement was reached between the City and landowners in the corridor establishing a mechanism for the analysis and planning of the area. The planning process has progressed through a number of milestones leading up to this Specific Plan. From the outset a public/private partnership has existed which has allowed the City to shape a plan for orderly development while involving the property owners in the organized planning process.

Initial stages of the work looked at all properties in the corridor from the Eleventh Street off-ramp to some 4,500 feet east of the MacArthur Drive interchange. Following review of development opportunities and constraints and alternative plan concepts the planning area boundaries were revised to those considered in this plan. This Specific Plan addresses land uses, design standards and implementation measures for commercial, industrial and residential developments on these properties.

### 1.1 Planning Area Location and Description

The I-205 Corridor Specific Plan encompasses approximately 714 acres of land adjacent to the City of Tracy (Figure 1.1 and 1.2). Functionally the lands are grouped in two separate planning areas. These are described as the Grant Line and MacArthur planning areas and are shown in Figure 1.3.

Current land uses in the area of the Specific Plan include active and dormant agricultural lands and commercial development located near Grant Line Road at the I-205 interchange. The parcels are nearly all outside the City Limits of Tracy and approximately 50 percent of the lands are beyond the Sphere of Influence zone of the City.

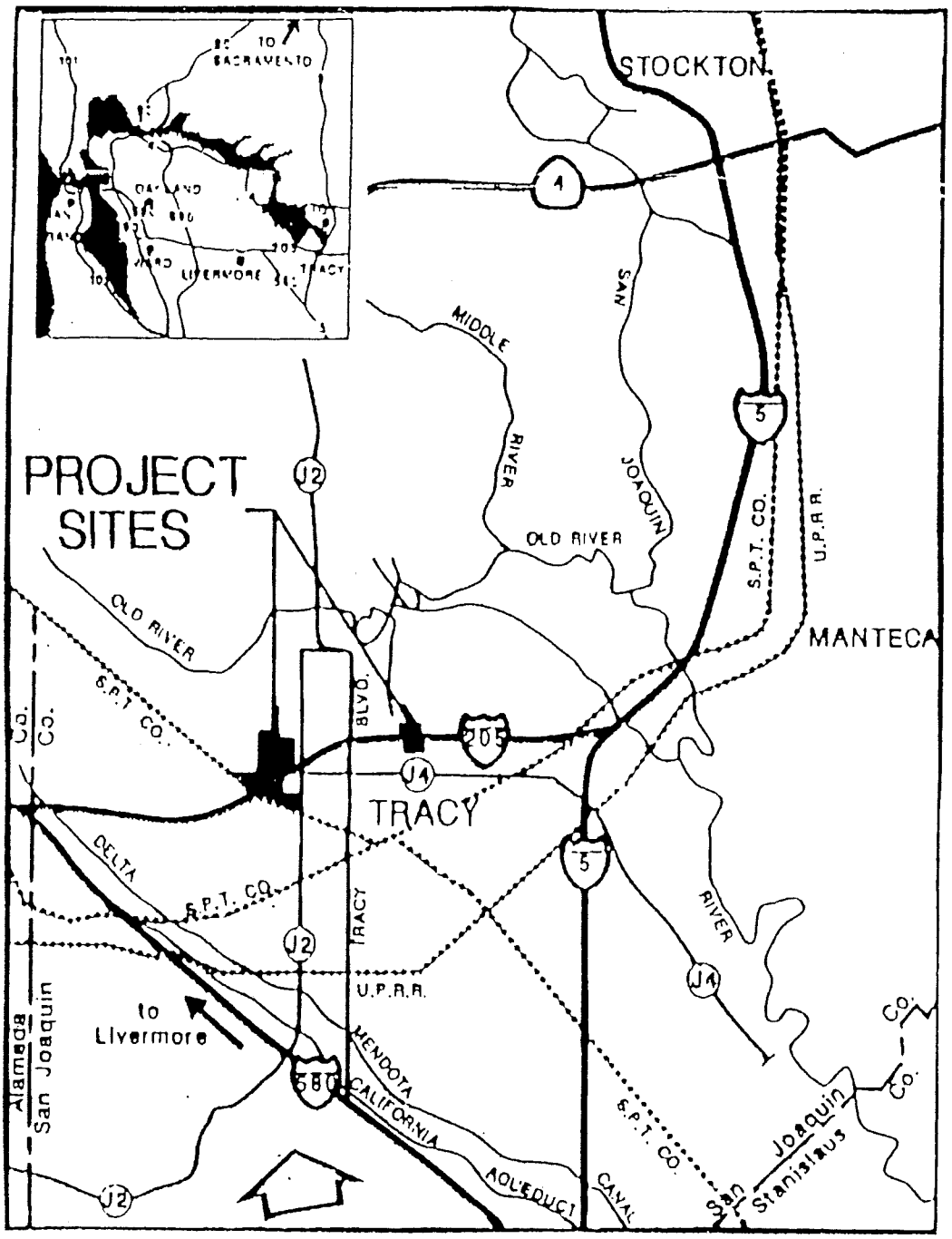


N

NOT TO SCALE

| JOB NUMBER: COT012 | PROJECT SITE LOCATION/ REGIONAL SETTING I-205 CORRIDOR SPECIFIC PLAN AMENDMENT CITY OF TRACY CALIFORNIA | Ruark and Associates Consulting Engineers | FIGURE 1.1 |
|---|---|---|---|

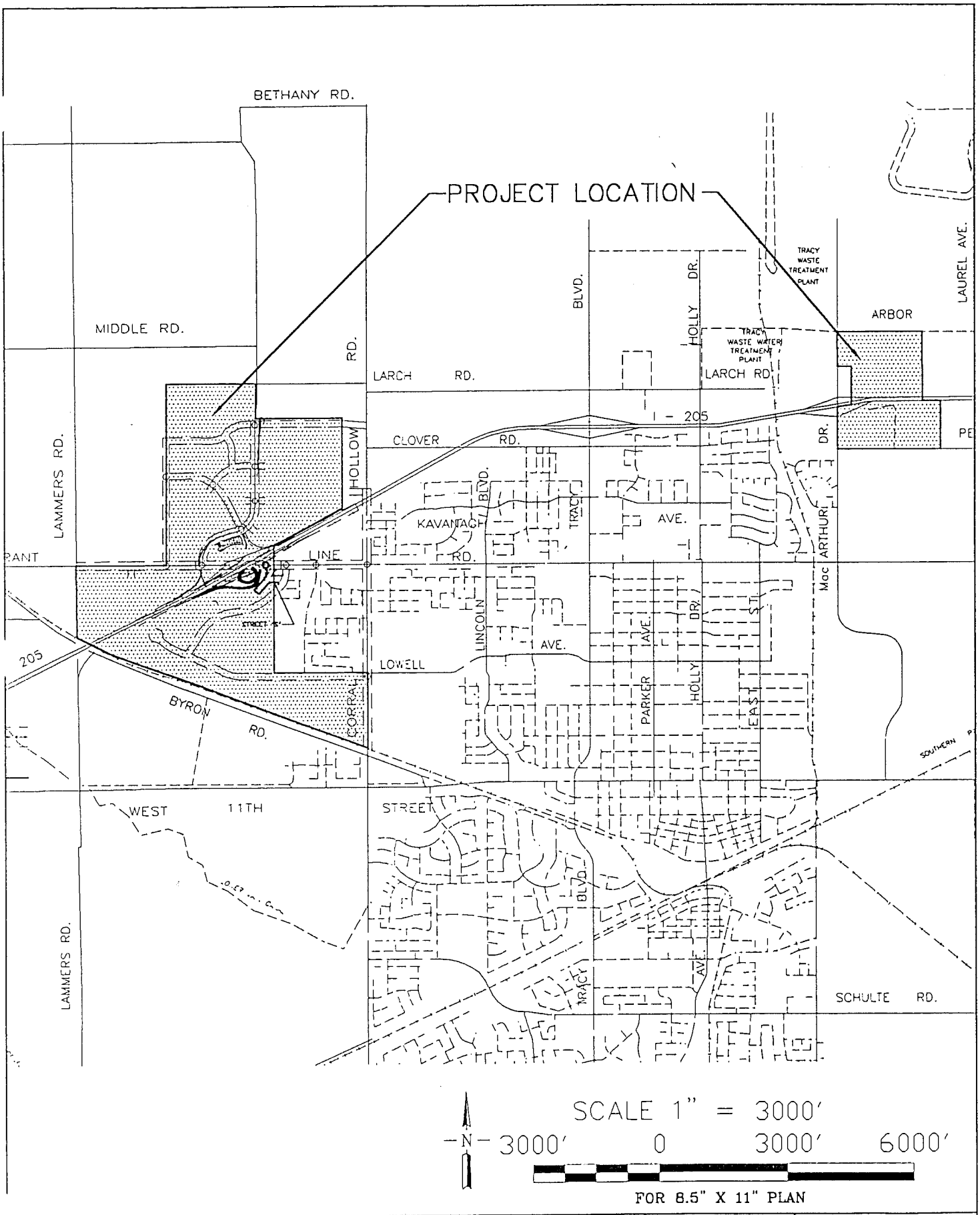


| JOB NUMBER: COT012 | LOCATION MAP<br>I-205 CORRIDOR SPECIFIC PLAN AMENDMENT<br>CITY OF TRACY CALIFORNIA | Ruark and Associates<br>Consulting Engineers | FIGURE 1.2 |
|---|---|---|---|

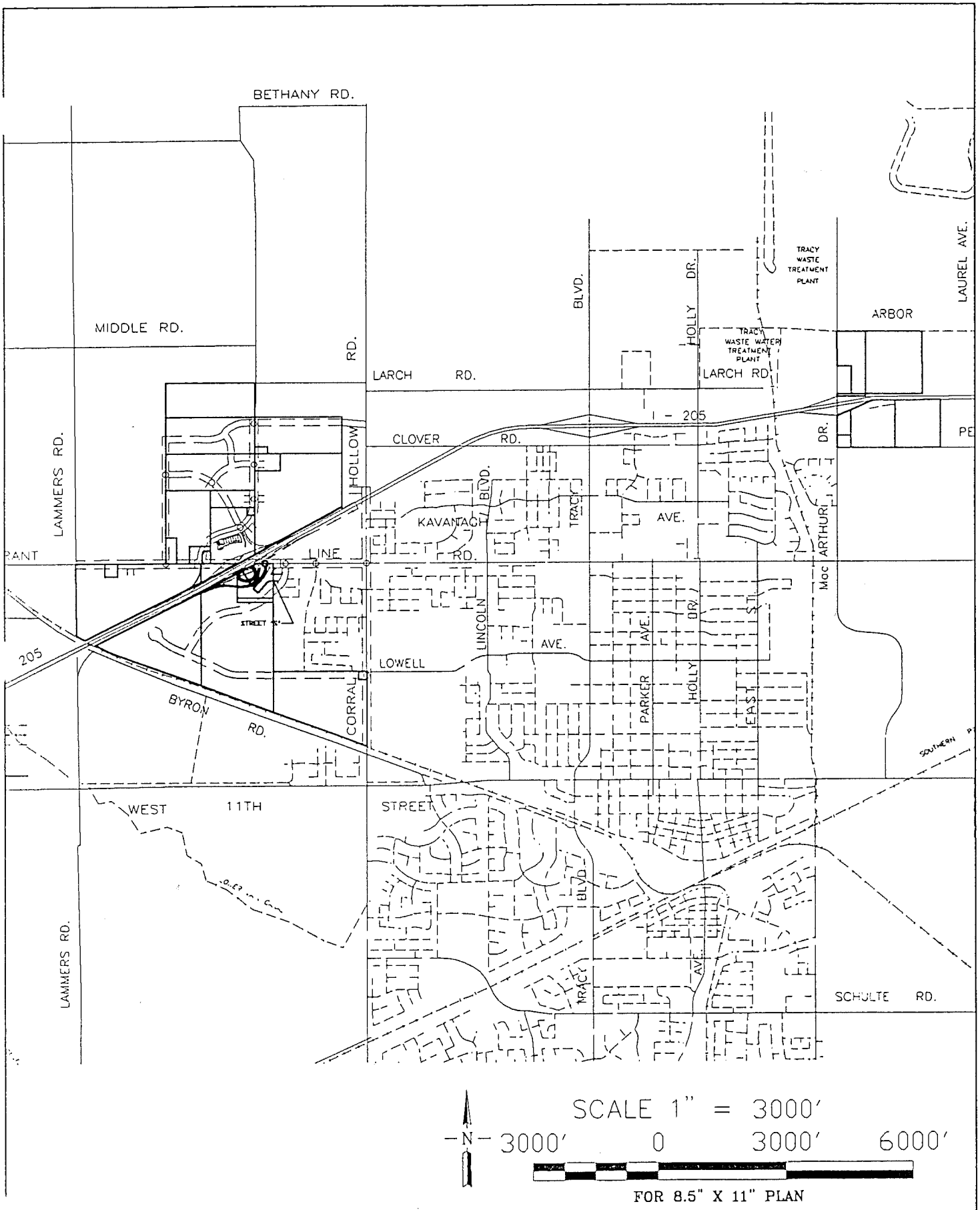


| JOB NUMBER: COT012 | LAND OWNERSHIP<br>I-205 CORRIDOR SPECIFIC PLAN AMENDMENT<br>CITY OF TRACY CALIFORNIA | Ruark and Associates<br>Consulting Engineers | FIGURE 1.3 |
|---|---|---|---|

## 1.2 Factors Influencing Specific Plan's Concepts

A number of factors have influenced the development of the Specific Plan including the location and configuration of access to Interstate 205, the configuration of property ownership, roadways, power line easements and irrigation channels which cross many of the properties, and proximity to both Interstate 205 and the railroad.

Also, general plans and zoning maps of the City and County influence the plan's concepts. Lands within the I-205 Specific Plan boundaries are zoned GA-40 in the San Joaquin County General Plan. This designation permits the type of agricultural operations existing on the lands and also allows the construction of one residence for every 40 acres of land.

Within the Sphere of Influence boundary of Tracy, the Tracy General Plan designates a portion of the lands as Thoroughfare Commercial or Low-Medium Density Residential. The Tracy General Plan defines these designations as follows:

- **Thoroughfare Commercial.** Intended for freeway-oriented services, automotive sales and services, building materials, fast foods and motels, but may permit other retail and office uses.

- **Low-Medium Density Residential.** Allows residential units ranging in density from 2.0 to 5.8 units per gross acre. Parcel size range from 17,000 to 5,600 net square feet per unit.

There are limited public utilities within the Specific Plan areas. The plan proposes methods under which utility services will be extended into the area.

This Specific Plan and the accompanying Environmental Impact Report establish prezoning of the lands within the plan's boundary. Upon annexation, the land use designations of the Specific Plan become the land use designations of a PUD Zone (see Chapter 5 for details).

## 1.3 Purpose and Intent of the Specific Plan

Under California Law (Government Code Section 65451 et seq.), Cities and Counties may use Specific Plans to develop policies, programs, and regulations to implement the jurisdictions adopted General Plan. Specific Plans often function to coordinate individual development proposals within a defined area.

The law requires that a Specific Plan include text and diagrams specifying:

- The distribution, location and intensity of land uses, including open space, within the plan area;

- The distribution, location and capacity of infrastructure, including transportation, sewage, water, storm drainage, solid waste and energy systems;

- Standards and criteria for development and utilization of natural resources; and

- An implementation program, including capital improvement plans, regulations and financing strategies.

Specific Plans are intended to be vehicles for implementing the goals and policies of a community's General Plan and can only be adopted or amended if they are consistent with the jurisdiction's General Plan. Further, it is important to note that area plan elements adopted by the City of Tracy do not necessarily take the place of citywide elements, but are in addition to citywide elements. In other words, the land use features of the I-205 Corridor Specific Plan consists of the land use map, goals and policies in the area plan as well as the goals and policies of the city-wide Land Use Element. The specific plan refines the policies of the citywide plan as they apply to a smaller geographic area.

It should also be briefly noted here that in order to legally put this Specific Plan into effect, several other planning activities require approval. The following activities must occur to allow this Specific Plan to become a reality, a PUD prezoning, an annexation of part of the Plan area to the City of Tracy, various minor amendments to existing industrial and residential specific plans, service area adjustments, etc. For details, see Chapter 5.

## 1.4 How to use this Specific Plan

The I-205 Corridor Specific Plan is divided into five major sections or chapters. Chapter 1 serves as a general introduction to the Specific Plan, outlining its setting and historical origins, as well as its structure and intent. Chapter 2 discusses the goals, objectives and policies, which form the framework for development within the Specific Plan areas. It also puts forward an overall urban design context, which sets the tone for the plan and design guidelines, which follow. Chapter 3 sets forth the planning concepts of the development plan. It divides the Plan into five elements (land use, circulation, parks and open space, storm drainage, and utilities) and explains how each is addressed by the Specific Plan. Chapter 4, Design Guidelines, establishes specific standards for all development and indicates allowed land uses, urban design and open space requirements, and street and storm drainage system improvements. Finally, Chapter 5 discusses how the Specific Plan will be implemented, including financing mechanisms and permit procedures.

# CHAPTER 2 - SPECIFIC PLAN GOALS AND OBJECTIVES

## 2. SPECIFIC PLAN GOALS AND OBJECTIVES

Given the variety of planning factors affecting the land to be developed under the I-205 Corridor Specific Plan, and the desire by Tracy residents to maintain a high quality of life in their community, a set of goals and objectives were established to guide development within the Plan's boundaries. The following are goals and objectives that presently exist in Tracy's General Plan and Specific Plans that are particularly pertinent for the planning of the I-205 Corridor Specific Plan:

Goal 1: Enhance the quality of life through a balanced system of infrastructure, transportation, land uses and open spaces. (Residential Specific Plan)

Goal 2: Preserve and enhance the quality of the environment. (Residential Specific Plan)

Goal 3: Circulation and Transportation: Plan for safe, well maintained and integrated circulation and transportation systems. (Residential Specific Plan)

Goal 4: Community development shall occur with minimal noise impact between adjacent activities and land uses. (Residential Specific Plan)

Goal 5: Encourage greater diversity in new residential development. (Tracy General Plan)

Goal 6: Revitalize downtown, reconsider it's role for the 1990's with respect to proposed large site commercial centers near the I-205 freeway. (Tracy General Plan)

Goal 7: Specify areas for expansion of office commercial development. (Tracy General Plan)

Goal 8: Provide industrial sites for non-rail uses, and separate industrial uses from residential development. (Tracy General Plan)

Goal 9: Encourage bicycle use and provide bike lanes. (Tracy General Plan)

The following goals and objectives originate from the amended Tracy General Plan, and are especially necessary in order to clearly state the intent, purpose, and focus of the I-205 Corridor Specific Plan:

Goal 10: Commercial development includes land uses planned for several activities such as neighborhood convenience markets; retailing, convenience, and service commercial activities in the downtown area as well as in the community centers and freeway-oriented regional centers; thoroughfare and freeway interchange commercial centers; and small, individual offices up to major regional office complexes. Commercial development in the 1990's may locate, depending on its requirements, in downtown Tracy, in neighborhood and community centers dispersed throughout town, and in the I-205 Corridor in community-wide and regional oriented shopping centers. (Policy Area 5: Commercial Development, Amended Tracy General Plan)

Goal 11: Tracy will have six shopping centers in addition to downtown in the year 2000. These shopping centers should be oriented mainly to the needs of the community. In the I-205 Corridor area, encourage the location of a regional mall and/or major community shopping center. (Policy 5-3, Amended Tracy General Plan)

Goal 12: Encourage the location of large, region-serving offices, data processing centers, or research and development firms in the I-205 Corridor where both the firms and Tracy can benefit from views of handsome buildings and grounds as seen from the freeway and commuter traffic will not use city streets. Require a minimum site area of two acres and a minimum building area large enough to exclude small, local-serving offices, which the plan intends to located in or near downtown. (Policy 6-2, Amended Tracy General Plan)

Goal 13: Permit industrial growth north into the I-205 Corridor area. Such growth shall also be encouraged in the Industrial Areas Specific Plan and in the I-205 Specific Plan. Specifically, Light Industrial uses shall be planned for the Grant Line Road and MacArthur Drive areas. (Policy 7-7, Amended Tracy General Plan)

## 2.1 Urban Design Goals and Objectives

The above section of this chapter describes the desired uses for land within the I-205 Corridor area. This section describes how these uses should appear and function. The urban design goals and objectives proposed describe how the plan's land development will look, and what physical forms it should take.

Urban design is concerned with the location, mass, and design of various urban land use components and combines elements of urban planning, architecture, and landscape architecture. The goals and objectives listed below are basic components only. Detailed design guidelines for specific land uses are delineated in Chapter 4 of this plan.

The look, form and function of various I-205 Corridor land uses will depend on how the uses should properly relate to other existing Tracy urban uses. The corridor land uses should have a design relationship with downtown Tracy. They also should have a relationship with the busy adjacent freeway, as well as with companion land uses within the plan area itself. These urban design concept relationships are described as follows:

### 2.1.1 Relationship of the Plan to Tracy Proper:

Design Goal #1: Plan area shall be designed to provide large commercial and industrial sites to attract needed retail and commercial uses to serve the whole town and surrounding region.

Design Goal #2: Because the desired large sites can only be located on the edge of town, north of I-205, the urban design of the corridor plan shall contain strong circulation links so that shoppers from Tracy proper can easily access the commercial/industrial complex by auto, bus, bicycle, and foot.

### 2.1.2 Relationship of the Plan to the Freeway Corridor:

Design Goal #3: Freeway commercial uses shall be located near freeway interchanges for easy access.

Design Goal #4: Retail land uses needing and benefiting from visibility from the freeway shall be given priority sites. Less extensive service and industrial land uses shall require less proximity to freeway visibility.

Design Goal #5: Commercial land uses and high density residential land uses shall buffer medium and low density residential uses from the freeway impacts of noise, appearance, and air pollution.

### 2.1.3 Relationships Internal to the Plan:

Design Goal #6: Land use, building structures, and open spaces in the corridor plan shall have unique, memorable, pleasant architectural features.

Design Goal #7: The corridor plan area shall have several special entry features to attract users to the commercial/industrial complex.

Design Goal #8: Large commercial buildings shall have a building configuration in scale with a larger setting, as well as insure a human scale when experienced by shoppers on foot.

Design Goal #9: The shopping mall and general retail commercial sites shall have a primary orientation for shoppers on

foot. Users of such facilities will park in large lots and walk from shop to shop, either in an enclosed mall, or on partially covered, screened, landscaped walks connecting store structure to store structure.

Design Goal #10: Service and freeway commercial sites, and light industrial sites, will be predominantly auto oriented, each use providing its own parking areas easily accessible from the plan's street system.

Design Goal #11: Residential development will emphasize housing types different from traditional existing Tracy single family lots. Realistic use of open spaces shall be featured. Design of setbacks, yards and parking structures in innovative ways is encouraged. Clustering and near-zero lot line concepts, where feasible, are desired. Units can be large or small, rented or owned. Good design of all units is a must.

### 2.1.4 Circulation Design Goals:

Design Goal #12: All areas shall have ease of access from the freeway, as well as existing Tracy.

Design Goal #13: All areas shall have easily accessible, well-designed, lighted, and landscaped parking lots.

Design Goal #14: The plan shall contain an arterial loop street system to provide a hierarchy of roadways easily accessible and controlled to facilitate acceptable levels of service.

Design Goal #15: The most important streets in the plan, in terms of size, location and access shall have the most landscaping, trees, lighting, street furnishings, entry monuments, and controlled sign design features.

### 2.1.5 Open Space and Pedestrian Goals:

Design Goal #16: Retail commercial areas shall contain public areas for shoppers for meeting, sitting, and passive recreation. Retail areas shall also contain strong pedestrian linkages from stores to stores, and from stores to parking lots.

Design Goal #17: Service and freeway commercial uses and industrial uses shall contain open spaces serving predominantly as setbacks for structures from streets or setbacks from other structures. No significant on-site pedestrian open spaces need to be provided for these uses.

Design Goal #18: Residential open spaces shall be provided in a number of ways, the form of setbacks, in schools, and in park sites, in common recreation areas in high density projects, and in pedestrian and bicycle trails connecting to other parts of Tracy.

# CHAPTER 3 - DEVELOPMENT PLAN CONCEPTS

In this chapter of the Specific Plan each of the land use designations is discussed and the concepts of the planning program are clearly identified.

## 3.1 Land Use Concepts - Description of the Specific Plan

The land uses proposed for the I-205 corridor establish a series of designations that allow for orderly development of the 714 area acres and position the City to capture regional, freeway-oriented commercial and industrial demand for the next 15-20 years. This plan also allows for a variety of other commercial and residential product types, provides for school and park facilities, and insures the development of adequate circulation and utility systems. See Tables 3.1 and 3.2 below for summary of proposed land uses.

TABLE 3.1

**Proposed Maximum**

**I-205 Specific Plan Gross Floor Areas**

| | | |
|---|---|---|
| Shopping Center/Mall | | 835,000 SF* |
| General Commercial/Retail | | 1,057,000 SF |
| Service Commercial | | 834,000 SF |
| Freeway Commercial | | 165,000 SF |
| Total Commercial | | 2,891,000 SF |
| Light Industrial | 1,688,000 SF | |
| Total | | 4,579,000 SF |

* For Shopping Center/Mall only this shall be gross leasable area

TABLE 3.2

Summary of Specific Plan Land Uses

by Plan Area

**Commercial/Industrial Complex - 511 Total Area**

**Grant Line Commercial/Industrial Lands - 405 acres**

| | |
|---|---|
| Regional Shopping Center/Mall<br>835,000 square feet gross floor area | 90 acres |
| General Commercial/Retail | |
| North of I-205 | 59 acres |
| South of I-205 | 30 acres |
| Total | 89 acres |
| Service Commercial<br>1 area | 54 acres |
| Freeway Commercial<br>2 areas | 18 acres |
| Light Industrial | 76 acres |
| Public | 36 acres |
| Roadways | 41 acres |

**MacArthur Land - 106 acres**

| | |
|---|---|
| General Commercial | 18 acres |
| Freeway Commercial | 7 acres |
| Service Commercial | 24 acres |
| Light Industrial | 55 acres |
| Arterials | 2 acres |

**"Residential Community" - 203 acres**

| | |
|---|---|
| Low Density | 310 units |
| Medium Density 472 units | |
| High Density | 256 units |
| Parks/School/Open Space | 12 acres |
| Freeway Interchange and Arterials | 1 acre |

Commercial uses likely to generate the most traffic are concentrated near the freeway interchanges with uses associated with lower traffic volumes located toward the edges of the planning area. At the furthest edges of the area a commercial reserve designation provides for the holding of the land for later development, depending on what the market will bear at that time.

**Table 3.3**
**Grant Line Planning Area**
**Land Use Distribution**

| A. Commercial / Industrial Properties | | | | | | | |
|---|---|---|---|---|---|---|---|
| Development Parcel | Approximate Acres | Land Use | | | | | |
| | | CC | GC | FC | SC | LI | PUBLIC |
| North of I-205 | | | | | | | |
| GL-1 | 37.7 | | | | | | X |
| GL-2 | 40.0 | | | | X | X | |
| GL-3 | 40.0 | | X | | X | X | |
| GL-4 | 10.0 | | X | | X | | |
| GL-5 | 11.3 | X | X | | | | |
| GL-6 | 0.7 | | X | | | | |
| GL-7 | 32.7 | | X | X | X | X | |
| GL-8 | 1.6 | | | X | | | |
| GL-9 | 1.4 | | | X | | | |
| GL-12 | 35.4 | X | X | | | | |
| GL-13 | 1.75 | | X | | | | |
| GL-14 | 5.0 | X | X | | | | |
| GL-15 | 69.3 | X | | | | | |
| GL-15 1(a) | 1.3 | | X | | | | |
| GL-15 1 (b) | 1.8 | | X | | | | |
| GL-16 | 3.0 | | | | X | | |
| GL-17 | 63.9 | | X | X | X | X | |
| GL-27 | 2.5 | | | X | | | |
| | | | | | | | |
| South of I-205 | | | | | | | |
| GL-24 | 24.0 | | X | | | | |

| B. Residential Properties | | | | | |
|---|---|---|---|---|---|
| Development Parcel | Approximate Acres | Units | LDR | MDR | HDR |
| GL-23 | 60.9 | 408 | 123 | 69 | 216 |
| GL-24 | 79.3 | 288 | 288 | 0 | 0 |
| GL-25 | 62.2 | 293 | 293 | 0 | 0 |

**Table 3.4**
**MacArthur Planning Area**
**Land Use Distribution**

| A. Commercial / Industrial Properties | | | | | |
|---|---|---|---|---|---|
| Development | Approximate | Land Use | | | |
| Parcel | Acres | GC | FC | SC | LI |
| M-1 | 14.2 | | | | X |
| M-2 | 39.6 | | | | X |
| M-3 | 2.0 | | X | | |
| M-4 | 50.0 | X | X | | |

The existing arterial street circulation system shall be expanded to provide for the convenient movement of employment and shopping related vehicular traffic. Each of these arteries will be designed to provide for a pleasing aesthetic solution while buffering adjacent neighborhoods from nearby traffic.

Within the residential areas, neighborhood parks, mini-parks and schools will be provided. The land use intensities in these zones will be varied to provide buffering and screening from the freeway and railroad and to nearby commercial development.

The proposed land use plan is divided into two planning areas. As shown in figures 3.1a, 3.1b and 3.1c, the Grant Line Planning Area encompasses the properties near the intersection of Grant Line Road and I-205 while the MacArthur Planning Area covers properties near the MacArthur Drive/I-205 interchange.

### 3.1.1 Grant Line Planning Area

The majority of the proposed Specific Plan area is located in the 608 acre Grant Line Planning Area. In this area, in the portion north of I-205, the most significant feature of the land use plan is the provision of a 90-acre site designated for a regional shopping center mall.

This mall site is the focus of this area, with the General and Service Commercial areas serving as a transition in intensity of use to the Light Industrial lands to the northwest. Near the interchange, areas of Freeway Commercial uses will be located to be easily seen and serve regional auto traffic coming off the interstate.

South of the freeway in the Grant Line Planning Area the major feature of this portion of the plan is a 197-acre residential community area. This is subdivided into the General Commercial (GC), Low Density Residential (LDR-4.6), Medium Density Residential (MDR-6.1 and MDR-8.0), High Density Residential (HDR-19.0), Park/School/Open Space (PS), and Freeway Interchange (FI) land use designations. The residential land use designations (i.e., LDR-4.6, MDR-6.1, etc.) recognize the diversity of housing provided through the subareas of the plan. The numbers that follow the letter designation specify the maximum density to be allowed in these subareas. For example, MDR-8.0 indicates a medium density residential land use with a maximum density of 8.0 units per acre. Another benefit of adding these precise maximums is that roads and utility systems can be sized to meet realistic development densities. The following listing defines each land use category. Table 3.3 tabulates the land use designation by parcel.

The proposed residential community is the focus of this southern portion of this planning area. Extensive design standards and guidelines (found in Chapter 4) have been established to encourage the development of a recreation oriented community buffered from the noise of the railroad and freeway. The 8.5-acre neighborhood park at the west end of the area will also serve as a visual gateway to the community from the Interstate.

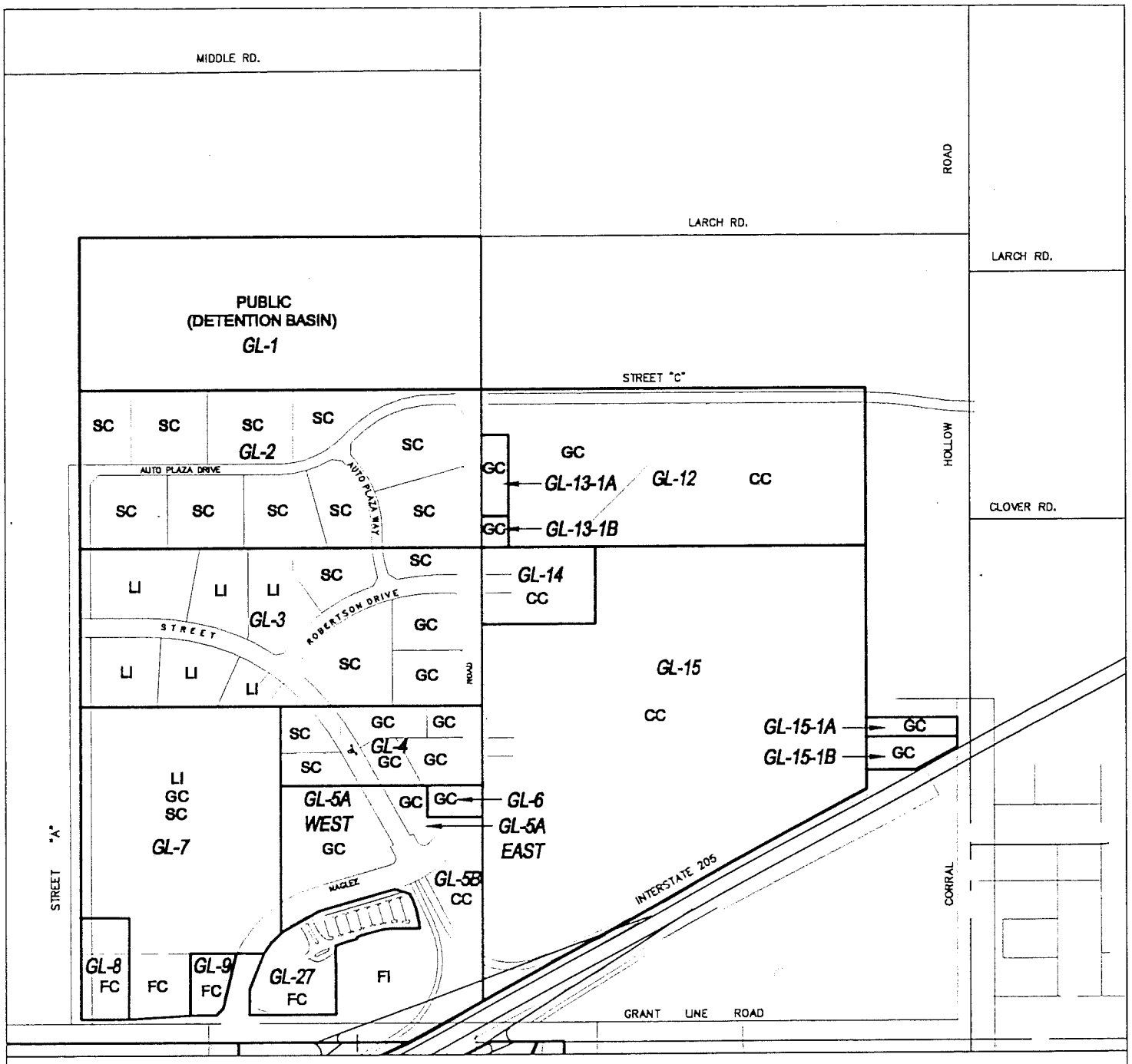


*LEGEND*

SC: SERVICE COMMERCIAL

GC: GENERAL COMMERCIAL

FC: FREEWAY COMMERCIAL

CC: COMMERCIAL CENTER

FI: FREEWAY INTERCHANGE

LI: LIGHT INDUSTRIAL

N

NO SCALE

| JOB NUMBER: COT012 | LAND USE PLAN<br>GRANT LINE NORTH PLANNING AREA<br>I-205 CORRIDOR SPECIFIC PLAN AMENDMENT<br>CITY OF TRACY CALIFORNIA | Ruark and Associates<br>Consulting Engineers | FIGURE 3.1a |
|---|---|---|---|

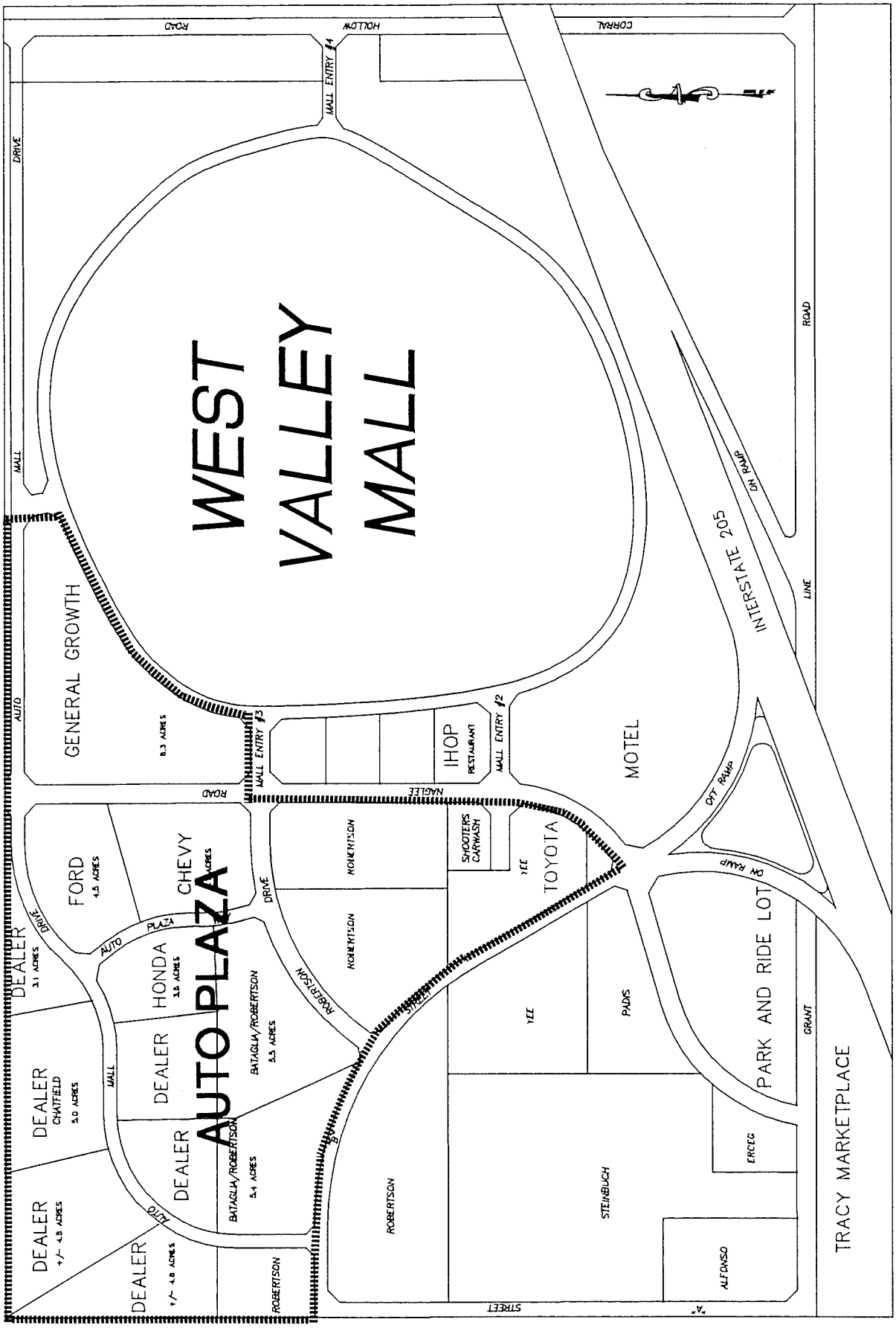


| JOB NUMBER: COT012 | LAND USE PLAN<br>TRACY AUTO MALL<br>I-205 CORRIDOR SPECIFIC PLAN AMENDMENT<br>CITY OF TRACY CALIFORNIA | Ruark and Associates<br>Consulting Engineers | FIGURE 3.1b |
|---|---|---|---|

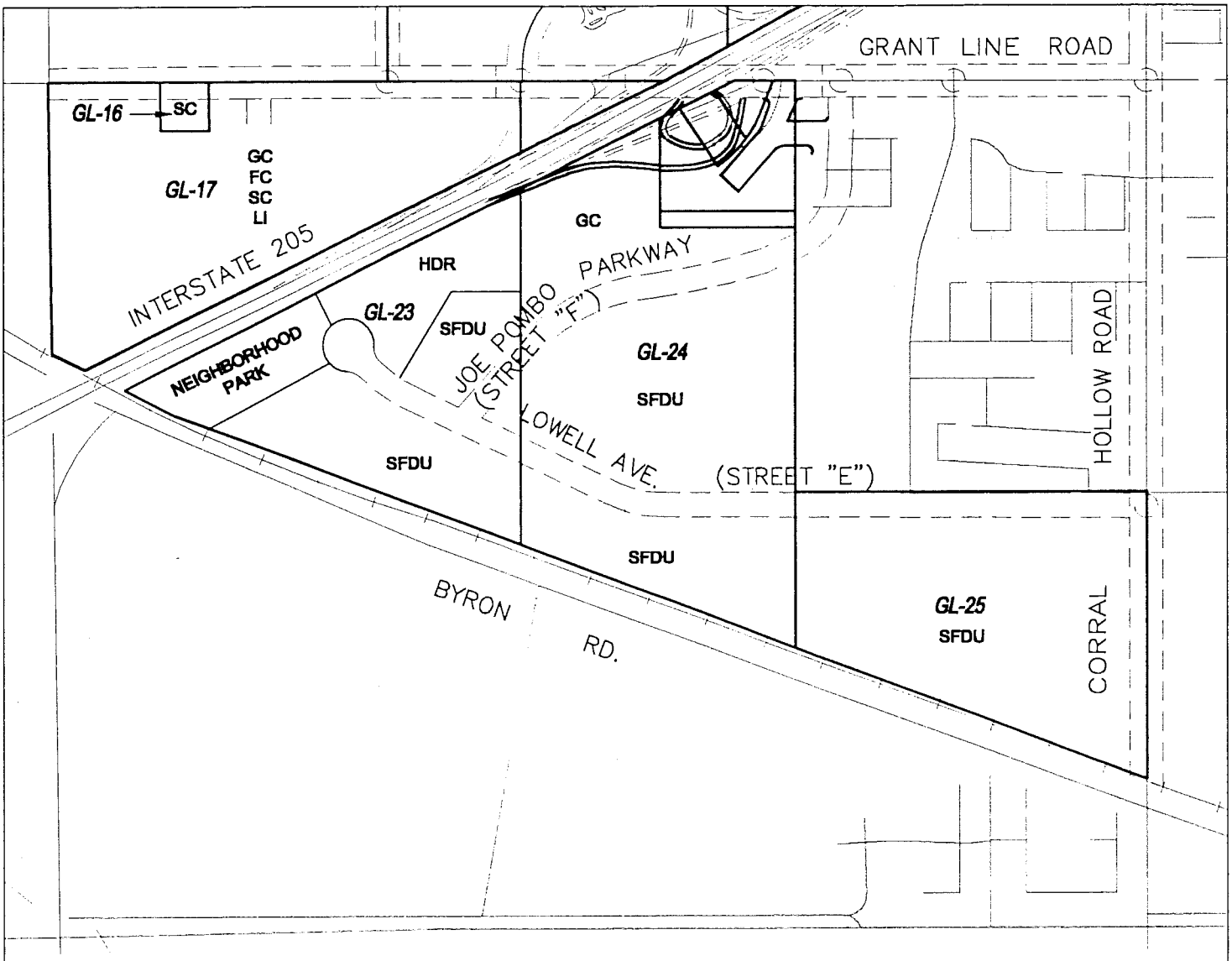


*LEGEND*

SC: SERVICE COMMERCIAL

GC: GENERAL COMMERCIAL

FC: FREEWAY COMMERCIAL

CC: COMMERCIAL CENTER

FI: FREEWAY INTERCHANGE

LI: LIGHT INDUSTRIAL

HDR: HIGH DENSITY RESIDENTIAL

SFDU: SINGLE FAMILY DWELLING UNIT

SCALE 1" = 1000'

N 1000' 0 1000' 2000'

FOR 8.5" X 11" PLAN

| JOB NUMBER: COT012 | LAND USE PLAN<br>GRANT LINE SOUTH PLANNING AREA<br>I-205 CORRIDOR SPECIFIC PLAN AMENDMENT<br>CITY OF TRACY CALIFORNIA | Ruark and Associates<br>Consulting Engineers | FIGURE 3.1c |
|---|---|---|---|

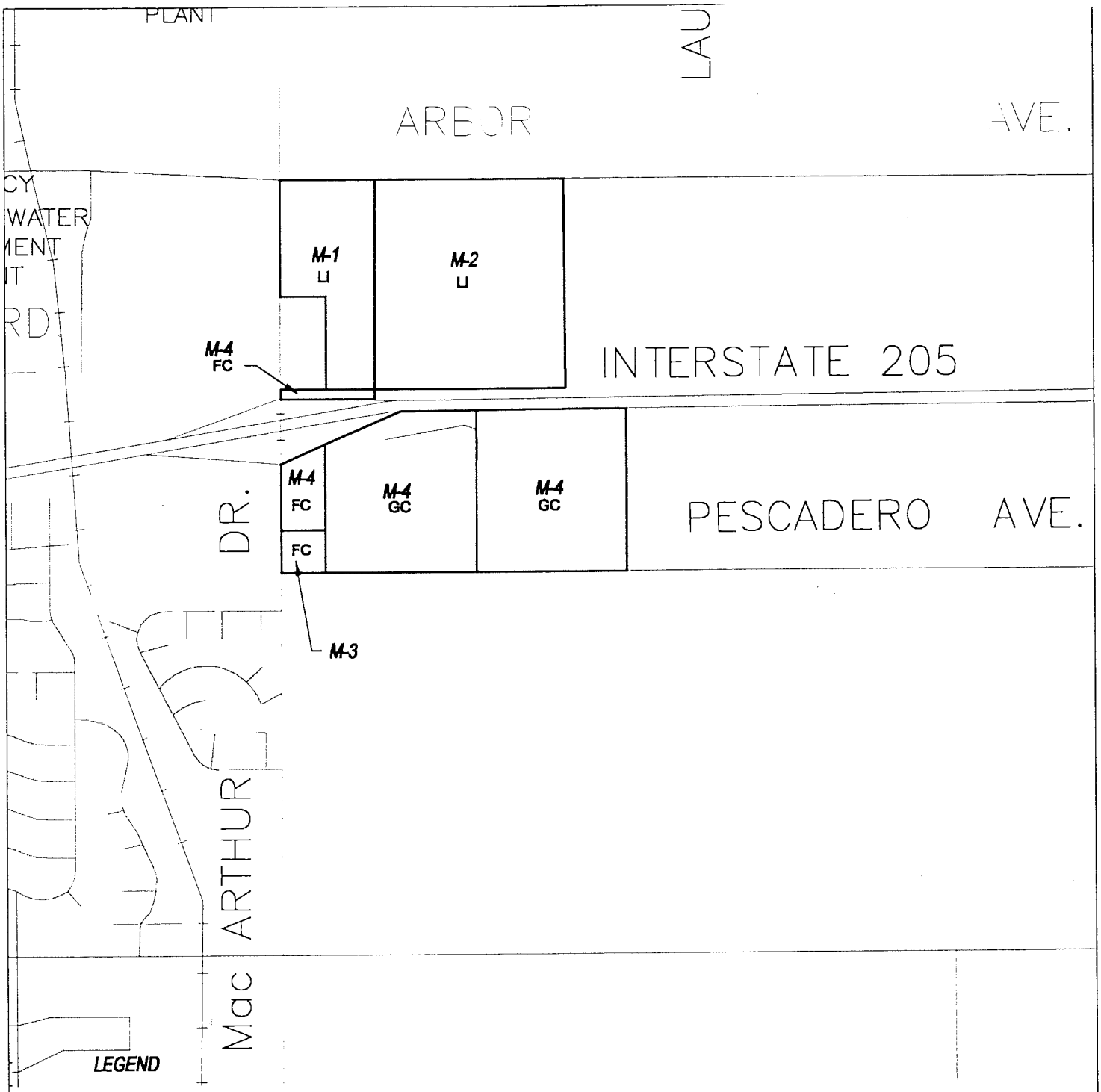


**LEGEND**

SC: SERVICE COMMERCIAL

GC: GENERAL COMMERCIAL

FC: FREEWAY COMMERCIAL

CC: COMMERCIAL CENTER

FI: FREEWAY INTERCHANGE

LI: LIGHT INDUSTRIAL

HDR: HIGH DENSITY RESIDENTIAL

SFDU: SINGLE FAMILY DWELLING UNIT

N

SCALE 1" = 1000'

1000' 0 1000' 2000'

FOR 8.5" X 11" PLAN

| JOB NUMBER: COT012 | LAND USE PLAN<br>Mac ARTHUR PLANNING AREA<br>I-205 CORRIDOR SPECIFIC PLAN AMENDMENT<br>CITY OF TRACY CALIFORNIA | Ruark and Associates Consulting Engineers | FIGURE 3.1d |
|---|---|---|---|

## LAND USE DESIGNATIONS

**Commercial Center (CC)** – This category provides a large, specific site at a location appropriate for a major shopping center drawing trade from the surrounding region. The purpose of this designation is to provide a competitive, appropriately serviced site thereby encouraging its early development.

**General Commercial (GC)** – An all purpose zone suitable for most retail commercial uses. Provides for a broad variety of uses that are appropriately located on major thoroughfares. Patrons are encouraged to park once and visit several establishments. Coordinated parking will be provided. Examples would include apparel stores, drug stores, record stores and catalog stores.

**Service Commercial (SC)** – Appropriate locations for fewer attractive, yet valuable, commercial uses. Sites for businesses typically requiring relatively large areas with off street parking that may not be visually compatible with uses found in the General Commercial district. Sites attract and require provisions for little pedestrian traffic. Service Commercial establishments would include rug-cleaning establishments, glass replacement shops, plumbing shops and tire sales stores.

**Freeway Commercial (FC)** – Providing sites for uses specifically associated with travel on the Interstate highway. Examples would include lodging, gas station and restaurant sites.

**Light Industrial (LI)** – A suitable category for business parks and warehouse uses. Also, a zone for light manufacturing uses not generating large quantities of wastes or requiring rail access.

**General Commercial Reserve (GCR)** – Land that may be appropriate for a General Commercial designation at some future date. At this time the land retains agricultural zoning.

**Low Density Residential (LDR)** – Residential land appropriate for development at a density up to 4.6 dwelling units per gross acre. Lot sizes range from 17,000 to 5,600 square feet.

**Medium Density Residential (MDR)** – Lands suitable for development at a density up to 6.1 or 8.0 dwelling units per gross acre depending on the designation applied. Lots sized from 5,600 to 3,000 net square feet. Included in this zone would be detached homes, duplexes, patio homes, zero-lot-line houses and clustered, attached housing.

**High Density Residential (HDR)** – Residential lands with attached housing ranging in density up to 25 units per gross acre with minimum lots from 2,900 to 1,740 square feet in size. These would include townhouses, condominiums and apartments.

**Park / School / Open Space (PS)** – Lands set aside for dedication or acquisition as public park, school or open space site.

The proposed residential community's land use concepts are as outlined below:

1. Basic Concept: Housing variety – one of this area's concepts is to offer housing alternatives different from the typical Tracy low-density, large lot, single family homes now existing.

2. Lot Sizes: Low Density Residential (5,600 – 17,000 square foot lots), Medium Density Residential (3,600 – 5,600 square foot lots), High Density Residential (1,740 – 2,900 square foot lots).

3. Housing Density:

   Low Density Units – Single family homes.

   Medium Density Units – Single family homes, duplexes, patio homes, zero lot line houses, clustered and attached owned homes.

   High Density Units – Owned or rented townhouses, condominiums, apartments.

4. Maximum Units:

| Housing Type | Total Units |
|---|---|
| Low Density Residential | 310 |
| Medium Density Residential | 472 |
| High Density Residential | 256 |
| Totals | 1,038 |

### 3.1.2 MacArthur Planning Area

The MacArthur Planning Area is a 106-acre area located at the intersection of Interstate 205 and MacArthur Drive. All the lands included lie east of MacArthur Drive and are designated one of the following land use categories: General Commercial (GC), Service Commercial (SC), Freeway Commercial (FC) or Light Industrial (LI).

Table 3.4 (directly under Table 3.3) summarizes the land use. Here, much like the north Grant Line Planning Area, commercial uses are graded away from the freeway in zones of decreasing traffic generating impact. North of the freeway the Light Industrial Zone is compatible with existing similar developments on adjacent parcels.

## 3.2 The Relationship of the Proposed Regional Shopping Center and Downtown Tracy

The proposed development of a variety of major retail projects in the I-205 Corridor will collectively become a regional shopping center located on the northwest edge of Tracy. While this will bring sales tax revenue from shoppers from outside of Tracy, and be a convenient location for Tracy residents to shop, the shopping center will draw shoppers and retailers away from the existing downtown. Consequently, it will be important to provide means for the I-205 Corridor and the existing downtown to each find their new roles in the retailing environment. Specifically, downtown's role will change from what it is today. What that change will be, no one knows yet.

The street and interchange improvements identified by this plan plus locational features of the I-205 Corridor sites, will define the shopping center's niche among the region-serving retailers. On the other hand, the existing downtown, as with many other downtowns in the Valley and elsewhere, will have to work at redefining its role. Toward this end the ongoing Main Street program and the Downtown Assessment District are steps in this direction.

Recognizing the City's resident's need for a variety of retailing opportunities, this plan proposes funding to assist the downtown in keeping and attracting merchants. Beginning in the first development year, the plan provides funds to be utilized in the preparation of an economic development plan for the Main Street/downtown area. As the primary impact of the regional shopping center will be an increase in vacancies in large buildings in downtown Tracy, this economic development plan should contain strategies for how vacant downtown buildings could be reused. The plan should consider this potential effect and address the reuse potential of major space users. Both private and public reuse of these facilities should be considered. For example, the City might consider future governmental or cultural needs that might be satisfied by moving to the structures. Also, offices, specialty retail, commercial services, or commercial recreational uses might wish to cluster together downtown in the future.

## 3.3 Traffic Circulation Concepts

### 3.3.1 Circulation Purpose and Facilities

The I-205 Specific Plan will modify the local street network in the Plan area and create new roads. The I-205/Grant Line Road interchange will be modified. The Specific Plan will include a number of arterial and collector streets to serve the Plan's development traffic as well as traffic generated by other development in the area.

The Specific Plan development will include retail commercial, employment and residential land uses, all of which will rely upon a local street network which adequately links with I-205. In addition, the retail commercial and employment land uses will generate substantial traffic to/from other residential areas in the City. Thus, the I-205 Specific Plan Roadway System must integrate with the overall Tracy network.

This plan outlines the specific construction of new streets (or reconstruction of existing streets) needed in the area. Table 3.5 lists the arterial and collector streets within and adjacent to the Specific Plan area. (The overall street network is delineated in Figures 3.2a, 3.2b and 3.2c)

### 3.3.2 Level of Service Concept

In a network of urban or suburban streets and roadways, the traffic flow conditions are defined in terms of operations at intersections during the peak hours. These peak hours are the hours during which traffic volumes are highest. Typically, the peak hours occur during the morning and evening commute periods and include the heaviest combined concentration of commute trips, shopping trips, school trips, etc. At each intersection, the peak hour volumes are used to calculate the level of service (LOS).

Level of Service (LOS) is the primary indicator for traffic operation performance at intersections. At a signalized intersection, LOS is determined by calculating the volume of conflicting traffic movements at an intersection during one-hour and dividing that total by the capacity designed to accommodate those turning movements. The resulting calculations are expressed by LOS ratings which range from LOS "A" to LOS "F." The range describes increasing traffic demand, delays, and deterioration of services.

LOS "A" represents free-flow conditions with little or no delay (zero to five seconds) at signalized intersections. LOS "E" characterizes extremely unstable flow conditions with volumes at or near the designed capacity. Vehicles are likely to experience major delays (40 to 60 seconds) crossing an intersection. Minor incidents may lead to forced flow conditions (LOS "F") with operating volume substantially below capacity. This results in long queues backing up from all approaches to intersections.

At intersections where the minor street is controlled by stop signs, the LOS reflects delays experienced by that minor street traffic. Thus, while an intersection's overall LOS may be "C" or better, a specific turning movement from the minor street could experience delays equivalent to LOS "E" – "F."

Intersections with 4-way stop sign control have total approach volumes compared to capacity and the resulting LOS reflects similar overall delays described for signalized locations. However, if volumes were substantially "unbalanced" between the intersection legs, vehicles on the highest volume approach would experience disproportionate delays.

Table 3.5

## Arterial and Collector Streets in the I-205 Specific Plan

| Street Name | Designation | Section |
|---|---|---|
| **Grant Line Planning Area:** | | |
| Grant Line Road | Major Arterial (6 lanes) | Corral Hollow Road to Lammers Road |
| Corral Hollow Road | Major Arterial (6 lanes)<br>Major Arterial (4 lanes) | Eleventh Street to Grant Line Road |
| Street "A" | Minor Arterial (4 lanes)<br>Minor Collector | Grant Line Road Street B<br>Street B to Auto Plaza Drive |
| Street "B" | Major Arterial (4 lanes) | Naglee Road to Street "A" |
| Naglee Road | Major Arterial (6 lanes) | Grant Line Road to Street "C" |
| Street "C" | Major Arterial (4 lanes) | Naglee Road to Corral Hollow Road |
| Auto Plaza Drive | Minor Collector (2 lanes) | Street "A" to Naglee Road |
| Auto Plaza Way | Minor Collector (2 lanes) | Robertson Drive to Auto Plaza Drive |
| Street "S" | Minor Collector (2 lanes) | Cul-de-sac to Street "F" |
| Henley Parkway (Street "F") | Major Arterial (4 lanes) | Grant Line Road to Street "S" |
| Henley Parkway (Street "F") | Minor Collector (2 lanes) | Street "S" to Lowell Ave |
| Lowell Avenue (Street "E") | Minor Collector (2 lanes) | Cul-de-sac to Corral Hollow Road |
| Robertson Drive | Minor Arterial (4 lanes) | Street "B" to Naglee Road |
| **MacArthur Planning Area:** | | |
| MacArthur Drive | Major Arterial (4 lanes)<br>Minor Arterial (4 lanes) | Grant Line Road to westbound I-205 ramps<br>North of I-205 westbound ramps |
| Pescadero Avenue | Minor Arterial (4 lanes) | Along project frontage |

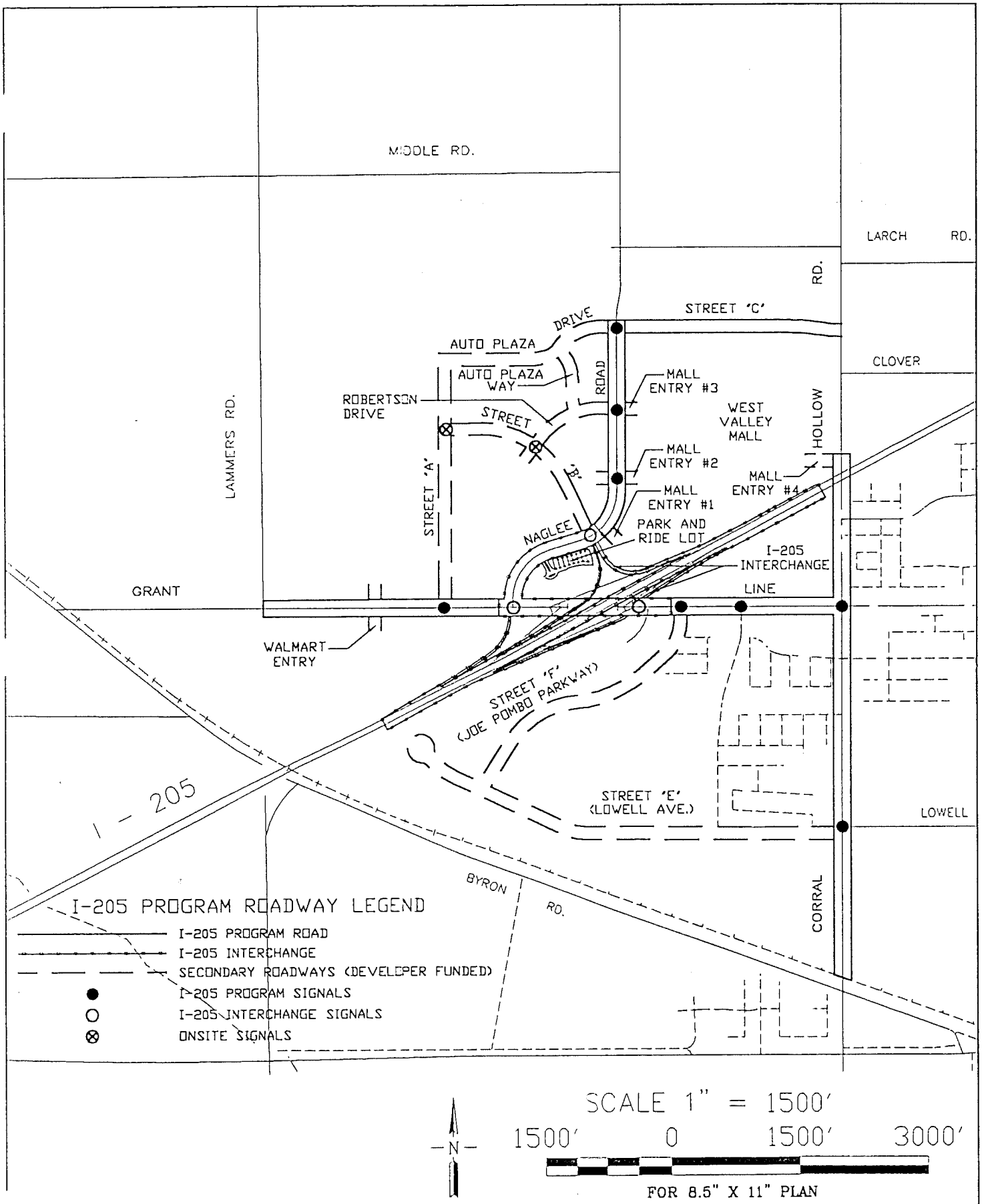


| JOB NUMBER: COT012 | ROADWAYS (PHASE I)<br>GRANT LINE PLANNING AREA<br>I-205 CORRIDOR SPECIFIC PLAN AMENDMENT<br>CITY OF TRACY CALIFORNIA | Ruark and Associates<br>Consulting Engineers | FIGURE 3.2a |
|---|---|---|---|

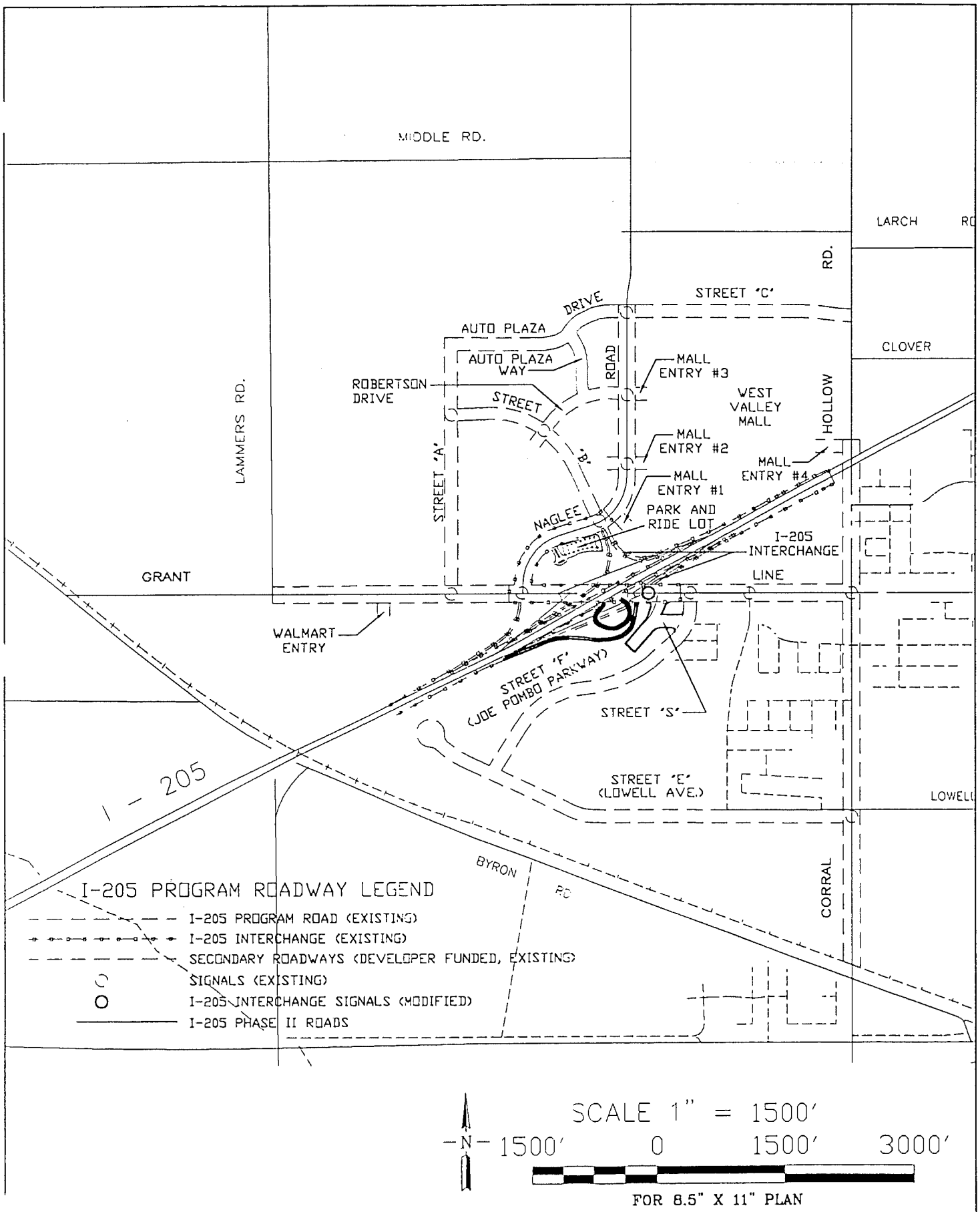


| JOB NUMBER: COT012 | ROADWAYS (PHASE II)<br>GRANT LINE PLANNING AREA<br>I-205 CORRIDOR SPECIFIC PLAN AMENDMENT<br>CITY OF TRACY CALIFORNIA | Ruark and Associates<br>Consulting Engineers | FIGURE 3.2b |
|---|---|---|---|

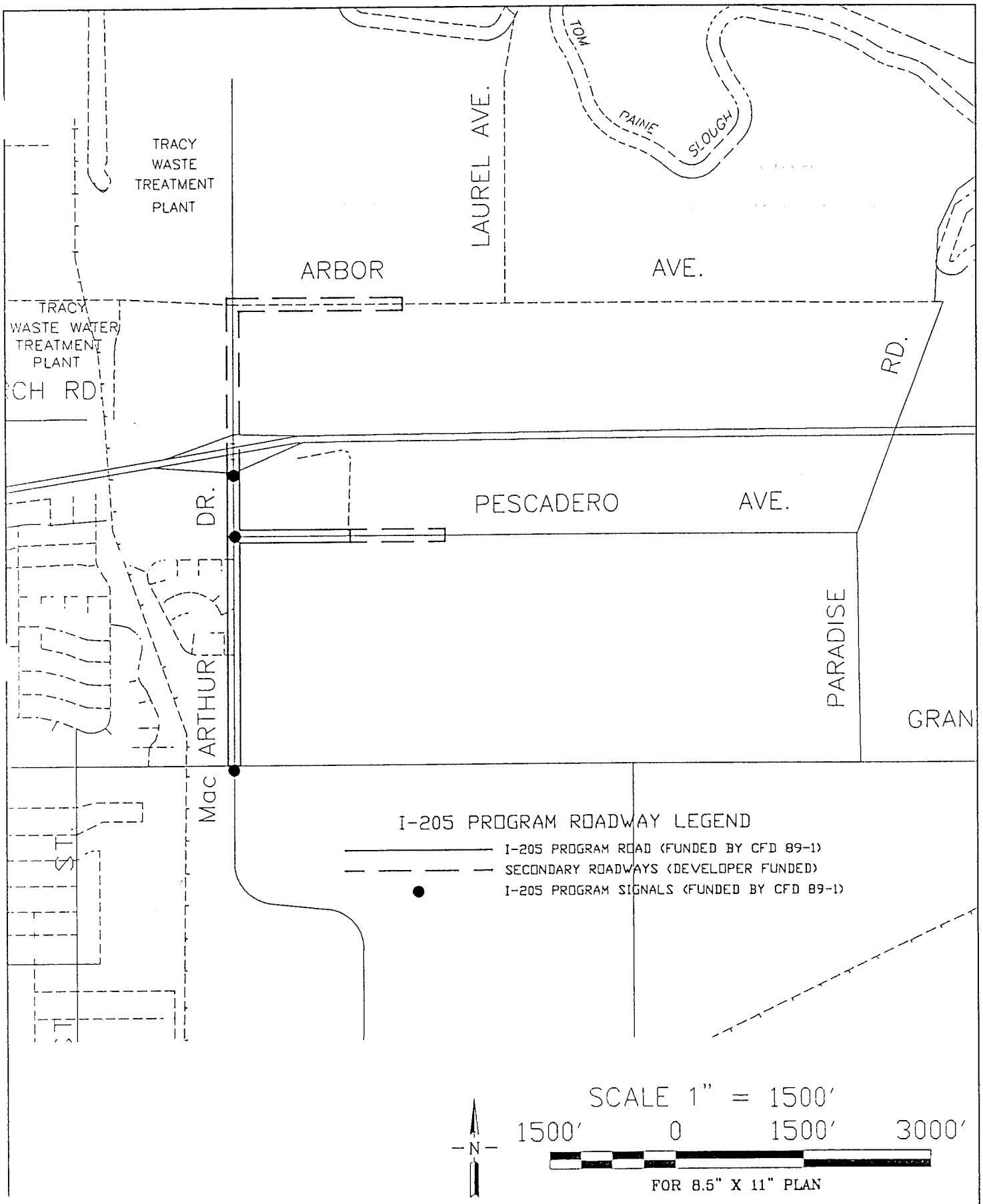


| JOB NUMBER: COT012 | ROADWAYS<br>Mac ARTHUR PLANNING AREA<br>I-205 CORRIDOR SPECIFIC PLAN AMENDMENT<br>CITY OF TRACY CALIFORNIA | Ruark and Associates<br>Consulting Engineers | FIGURE 3.2c |
|---|---|---|---|

### 3.3.3 Traffic Volumes and Flow Conditions

As a part of the Specific Plan process, peak hour traffic volumes have been projected for the entire study area. These volumes include the following:

- Existing traffic
- Traffic generated from development of all of the adopted Phase I Residential Areas Specific Plan
- Traffic generated from development of fifty percent of the land uses identified in the adopted Phase I Industrial Areas Specific Plan
- Traffic generated by other proposed adjacent commercial and residential projects
- Traffic generated by the I-205 Specific Plan

## 3.4 Parks and Open Space Concepts

### 3.4.1 Parks

This Specific Plan seeks to add to the quality park and open space system which was begun by the *Residential Areas Specific Plan* and the *Parks and Parkways Design Manual.* This I-205 Specific Plan will provide an additional 12.0 acres of dedicated parkland, with all of the acreage provided in the South of Grant Line Planning Area adjacent to residential land uses.

Key objectives of the park system in the I-205 Corridor are to:

- Develop a high-quality public park system for the Specific Plan Residential Area that provides varied recreation opportunities.
- Conform to the current park dedication factor of 4.0 acres of park per 1,000 population, with a public park facility within a 660-foot (1/8 mile) radius from all homes.

Two types of parks are proposed for the Study Area: mini-parks and neighborhood parks. The mini-parks are planned to be one-half acre in size and located within subdivisions. They will then serve a small radius of homes without a need for the users to cross major streets. Another key objective of mini-parks is to provide a visual amenity that can serve as a focal point or identity feature for the neighborhood. In achieving this aim they would provide children's play areas for parents with small children, and recreational opportunities for older children and adults.

The planned neighborhood park is to be approximately 8.5 acres in size and intended to serve the needs of local residents. As the focal point for neighborhood-wide social, sport, and passive recreation events, the neighborhood park will accommodate all ages and user groups. The majority of homes near this park are proposed to be high density; the neighborhood park will supplement the smaller yard areas associated with this type of home.

Detailed guidelines for designing and constructing the various parks are included in Section 4.4.1, *Park Standards and Guidelines*.

### 3.4.2 Pedestrian and Bikeway System

A continuous hierarchical pedestrian and bikeway system is planned for the North and South Grant Line Planning Areas, to provide internal connections, as well as interconnecting commercial facilities to outlying residential areas. This idea has been an important design feature in previous specific plans as well.

Although the street system affords the possibility of interconnection by automobiles, the opportunity to achieve a high degree of non-vehicular linkage via a linear system of pedestrian and bikeways is an urban design elements that can set Tracy apart. This system has one primary purpose: it starts somewhere (an origin) and goes somewhere (a destination). This one characteristic distinguishes the pedestrian and bikeway system from the traditional "sidewalk" which is usually constructed alongside a roadway as a safety feature. This plan reflects and is consistent with the Bikeway Plan adopted by the City.

Key objectives of the pedestrian and bikeway system in the I-205 Corridor as shown in Figure 3.3, are to:

- Promote more convenient walking/cycling to commercial and City facilities, thereby discouraging the heavy reliance on automobiles.
- Provide a "visual break" in a developed area particularly if associated with a moderate amount of open space and landscaping.
- Provide a safe way for younger children to move within a neighborhood.

The pedestrian and bikeway system is planned to be organized into a network of major and minor trails. Where possible, this pedestrian/bikeway system will be jointly developed with the open channel storm drainageways located along Corral Hollow Road, Lowell Avenue and Orchard Parkway. This combination will ease problems of security, maintenance, and grade separation.

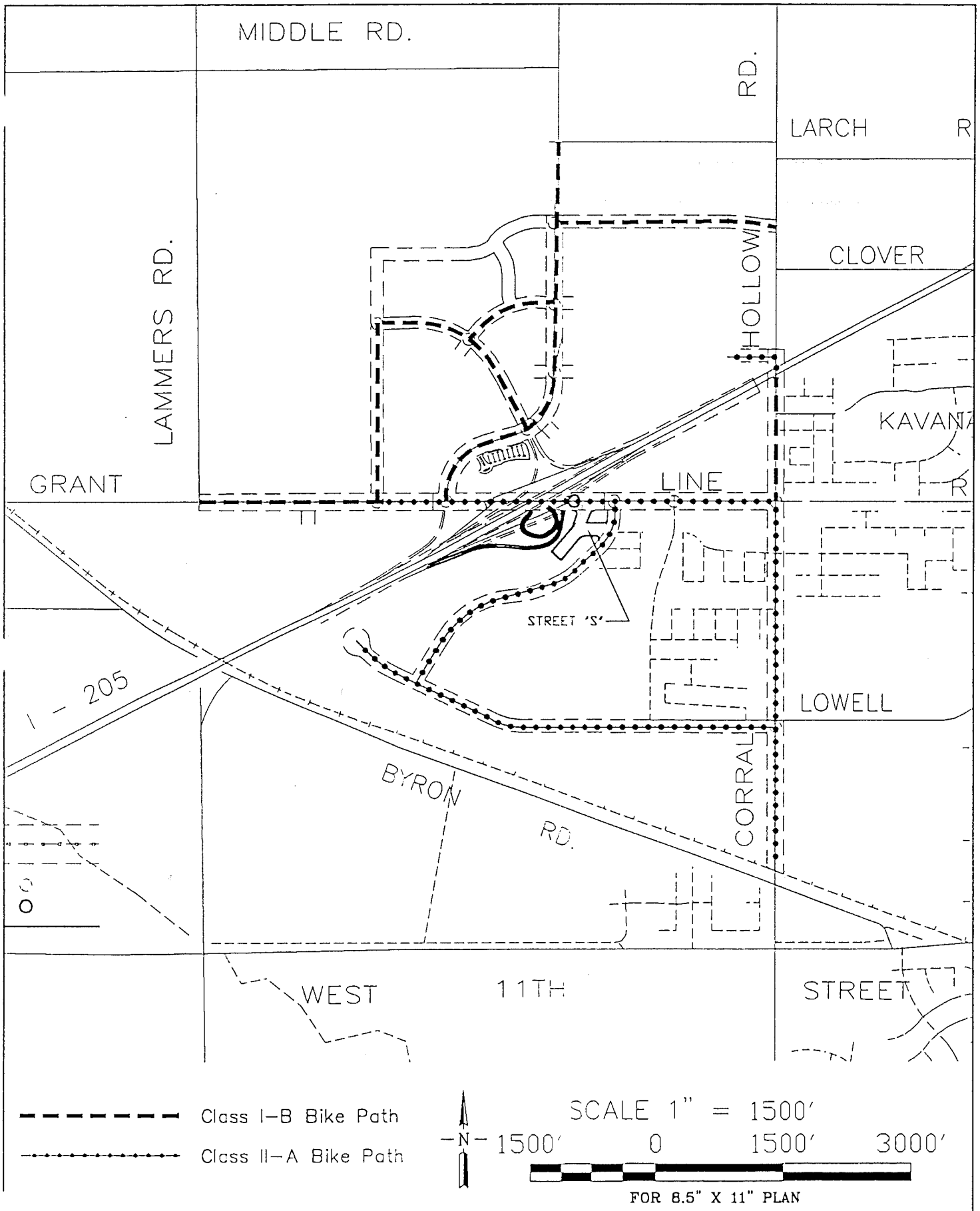


| JOB NUMBER: COT012 | BICYCLE CIRCULATION<br>I-205 CORRIDOR SPECIFIC PLAN AMENDMENT<br>CITY OF TRACY CALIFORNIA | Ruark and Associates<br>Consulting Engineers | FIGURE 3.3 |
|---|---|---|---|

The absence of sidewalks and pedestrian amenities in industrial and business parks is often the result of planning for the most convenient truck, service vehicle and automobile access through these areas. In reality, pedestrian needs in such developments are of great importance. Increased use of public transit by employees, and access between businesses or to lunch time eating areas now require that pedestrians walk in the streets or in planting beds. Potential conflicts between heavy vehicle use and pedestrian needs will be addressed in a number of ways including special intersection treatment and siting of sidewalks at a greater than standard distance from the roadway.

Guidelines for designing the various pedestrian and bikeway elements are contained in Section 4.4.2, *Pedestrian and Bikeway System.*

## 3.5 Storm Drainage Concepts

### 3.5.1 Hydrology and FEMA Flood Zones

As indicated in Figure 3.4 a portion of the Plan area lies within the inundation zone of the 100-year flood zone as identified by the Federal Emergency Management Administration (FEMA). Development of properties within this zone must conform to the design standards of Section 4.5 of this Plan. *Development of Flood Zones.*

### 3.5.2 Collection and Discharge Systems

In the Grant Line Road area, the lands south of I-205 will drain via a new pipe constructed under I-205 to the north directly to a new drainage system.

North of I-205 in the Grant Line area, the lands will drain to a new detention basin with a pump station and a new outfall. This system will consist of a series of pipes, a detention basin with a pump station and force main which ultimately discharges to the Old River (Figure 3.5a.) The implementation plan for this drainage option provides funds for a pipe system, a new detention basin, construction of a new pump station and force main outfall.

Study area lands in the MacArthur Planning Area are to be drained via a network designed in the City's 1989 Storm Drainage Master Plan (Figure 3.5b.)

This Master Plan identifies an open channel drainageway system discharging to the Sugar Cut.

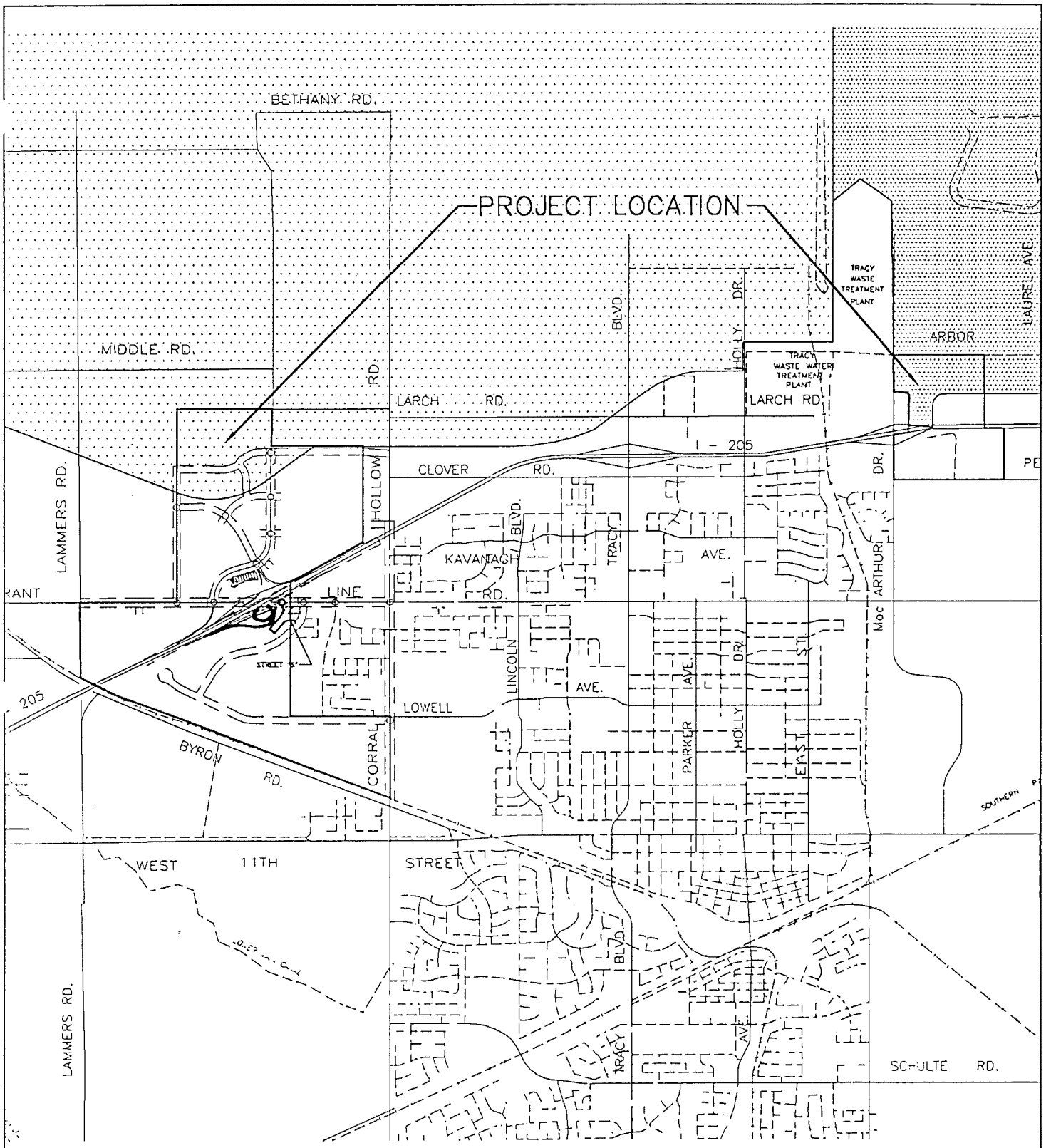


SCALE 1" = 3000'

N

3000' 0 3000' 6000'

FOR 8.5" X 11" PLAN

| JOB NUMBER: COT012 | FEMA FLOOD ZONES<br>I-205 CORRIDOR SPECIFIC PLAN AMENDMENT<br>CITY OF TRACY CALIFORNIA | Ruark and Associates<br>Consulting Engineers | FIGURE 3.4 |
|---|---|---|---|

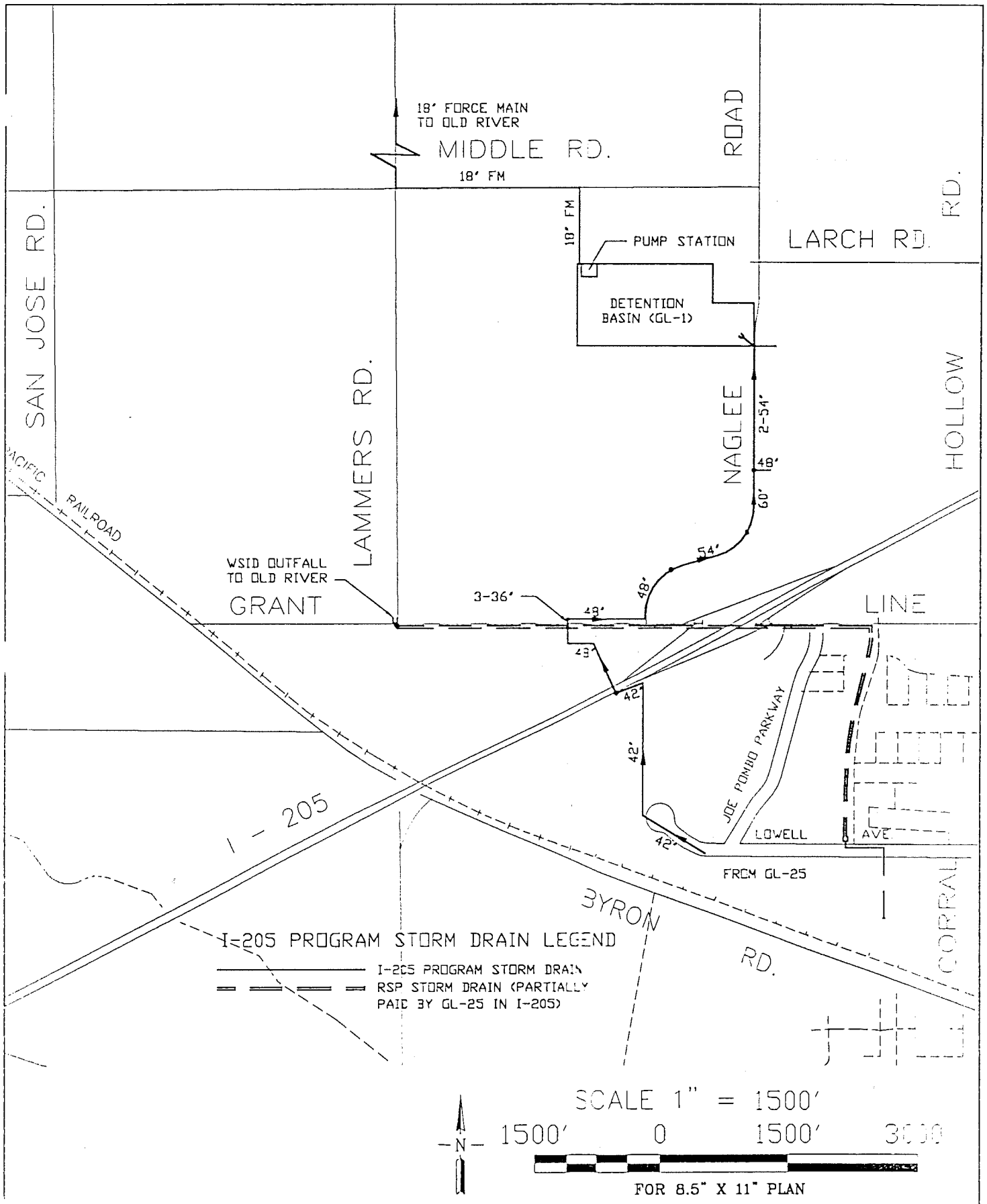


| JOB NUMBER: | STORM DRAINAGE<br>GRANT LINE PLANNING AREA<br>I-205 CORRIDOR SPECIFIC PLAN<br>AMENDMENT | Ruark and Associates<br>Consulting Engineers | FIGURE |
|---|---|---|---|
| COT012 | CITY OF TRACY CALIFORNIA | | 3.5a |

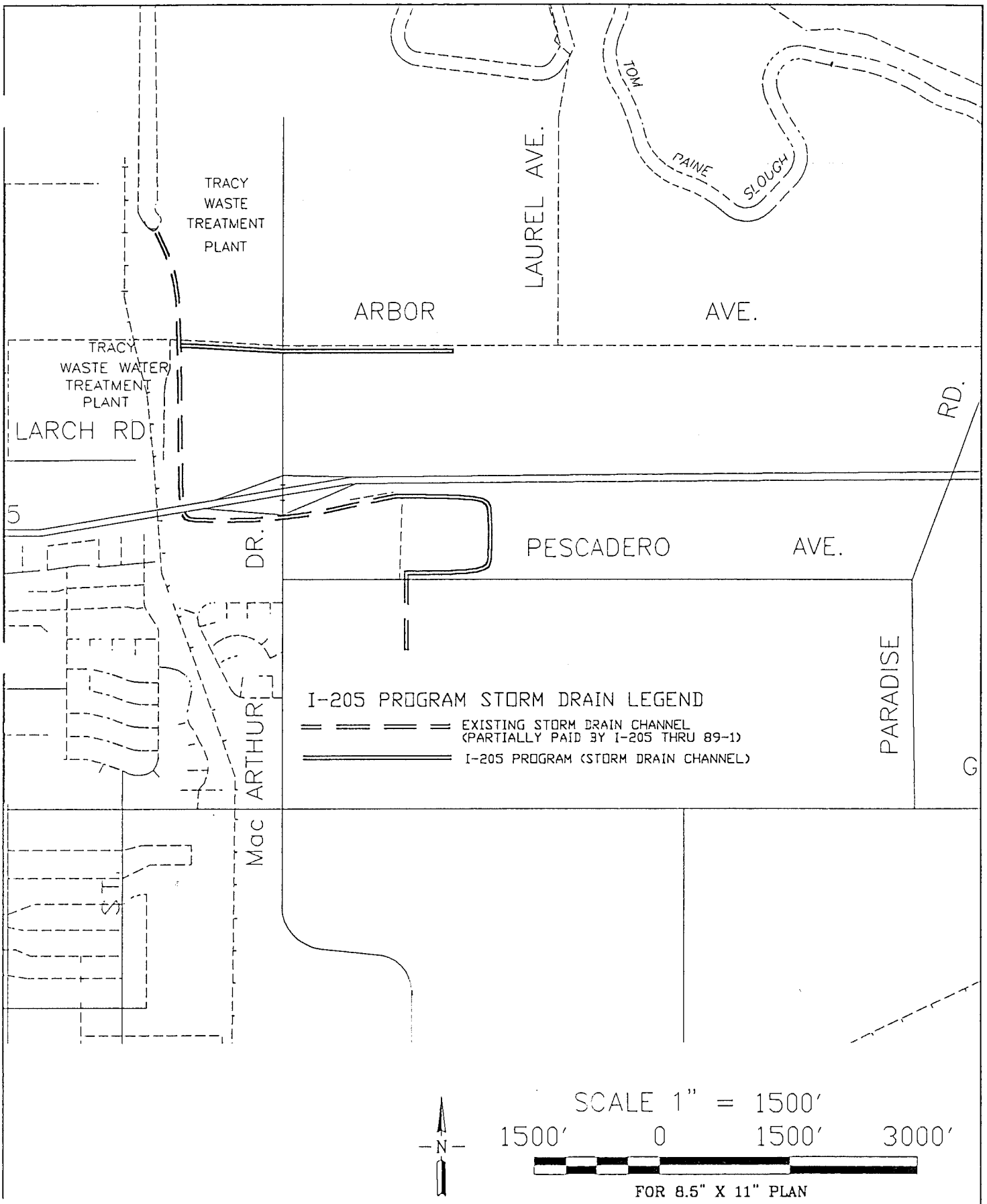


| JOB NUMBER: COT012 | STORM DRAINAGE<br>Mac ARTHUR PLANNING AREA<br>I-205 CORRIDOR SPECIFIC PLAN AMENDMENT<br>CITY OF TRACY CALIFORNIA | Ruark and Associates<br>Consulting Engineers<br>2 Crow Canyon Ct., Suite 206<br>San Ramon, CA 94583<br>(510) 820-7954 | FIGURE 3.5b |
|---|---|---|---|

The MacArthur area south of I-205 is traversed by the Pescadero Reclamation District drainage facilities which will be improved and enlarged under Community Facilities District 89-1 to become the City's eastside drainage channel. The Specific Plan lands south of I-205 will drain directly to this drainageway.

North of I-205 the MacArthur area lands will drain to a series of pipes, box culverts and open channels parallel to Arbor Avenue ultimately discharging into the eastside channel near the Sugar Cut.

## 3.6 Irrigation District Concepts

Plan area lands, as shown in Figures 3.6a and 3.6b are located within the boundaries of the Naglee-Burk Irrigation District (NBID), and West Side Irrigation District (WSID), and the Pescadero Reclamation District (PRD). As lands are annexed and developed they will be required to maintain irrigation district facilities that are necessary to continue flows to downstream properties. In the case of the lands in the Grant Line Planning Area south of I-205 the WSID main canal is to be incorporated into the planned storm drainageway. A short, dead end portion of WSID facility along the railroad will be abandoned once the lands develop.

In a similar fashion lands north of I-205 at Grant Line will be removed from the NBID. The plan will relocate and reconstruct District pumping facility and irrigation supply facilities so as to accommodate development and maintain the integrity of the irrigation system.

## 3.7 Utilities Concepts

### 3.7.1 Wastewater

#### 3.7.1.1 Treatment

City of Tracy wastewater is treated at the 9.0 mgd capacity treatment plant located at Holly Drive and Arbor Avenue. Currently the plant treats and discharges to the Old River an approximate 6.0 mgd. The full capacity of this plant is obligated to serve the Residential and Industrial Areas Specific Plan and Infill development within the existing city.

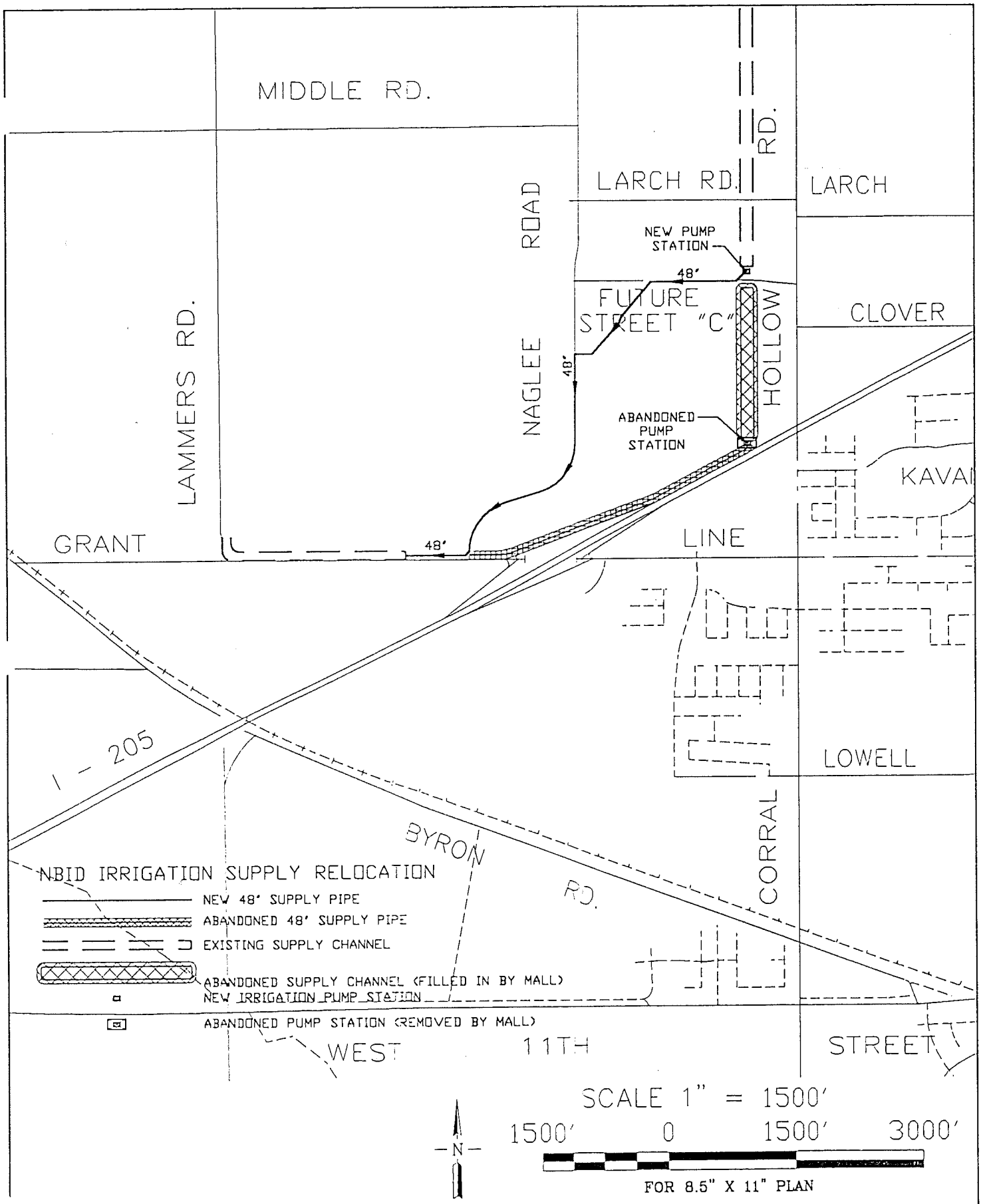


| JOB NUMBER: | IRRIGATION<br>NAGLEE BURK IRRIGATION DISTRICT<br>GRANT LINE PLANNING AREA<br>I-205 CORRIDOR SPECIFIC PLAN AMENDMENT<br>CITY OF TRACY CALIFORNIA | Ruark and Associates<br>Consulting Engineers | FIGURE 3.6a |
|---|---|---|---|
| COT012 | | | |

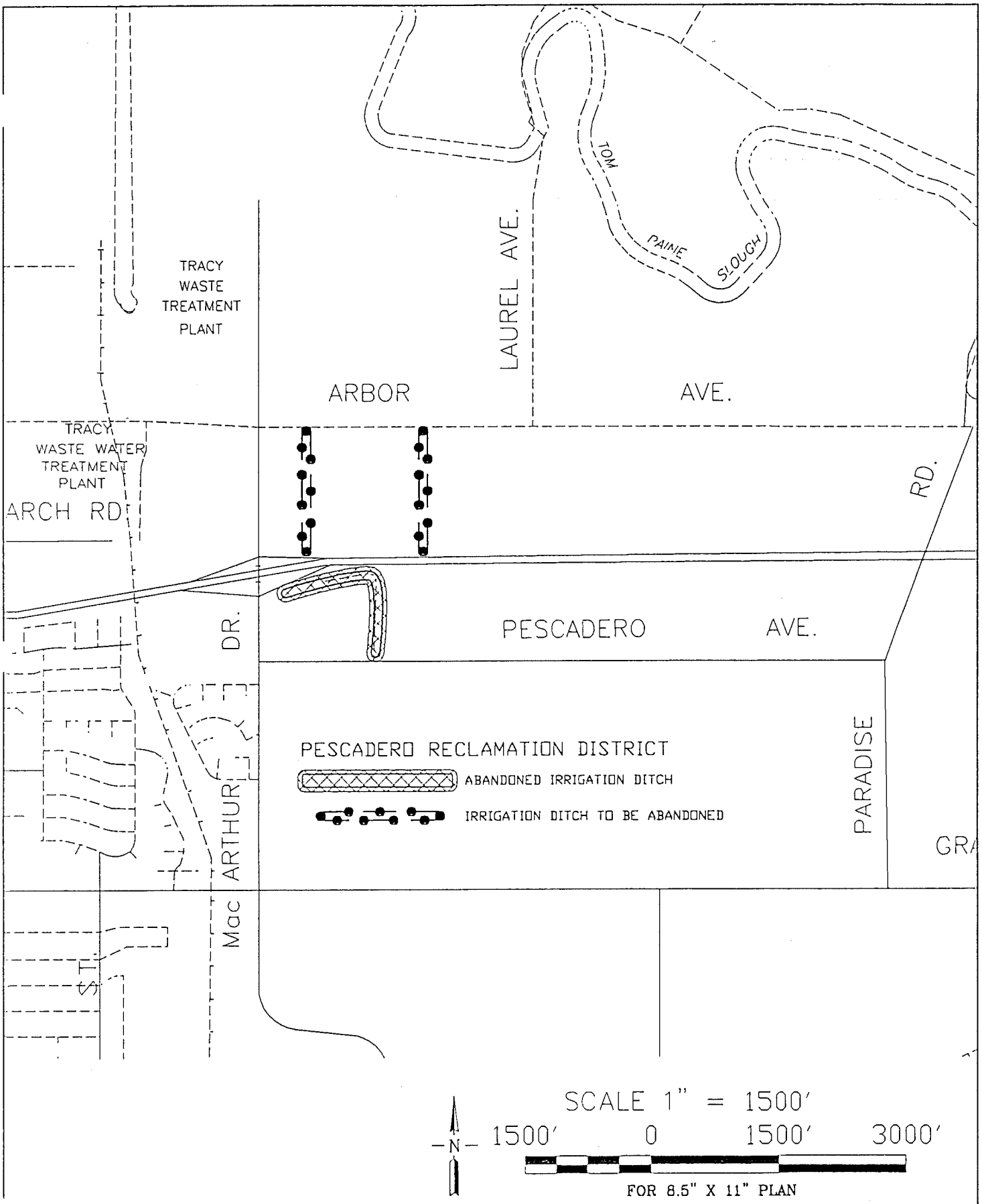


| JOB NUMBER: | IRRIGATION<br>PESCADERO RECLAMATION DISTRICT<br>Mac ARTHUR PLANNING AREA<br>I-205 CORRIDOR SPECIFIC PLAN<br>CITY OF TRACY AMENDMENT CALIFORNIA | Ruark and Associates<br>Consulting Engineers | FIGURE 3.6b |
|---|---|---|---|
| COT012 | | | |

I-205 Specific Plan development will generate approximately 1.20 mgd of additional sewage. In order to treat this flow either the treatment plant could be expanded or a separate treatment facility utilizing land disposal of treated effluent constructed north of the community. A 1996 report by CH2M Hill Engineers identifies these facilities and provides an opinion of probable costs. The Specific Plan proposes the expansion of the existing plant and commits monies to finance this solution.

#### 3.7.1.2 Collection

The proposed collection systems are shown on Figures 3.7a and 3.7b. In the MacArthur Planning Area the lift station, force main and collectors south of I-205 were built as a part of 1990 construction to serve the Yellow Freight and Market Wholesale developments. The collection system north of I-205 is funded by this plan as well as a planned enlargement of the lift station.

The Grant Line Planning Area is to be served by the new Hansen Road collection system draining from south to north and terminating at a new lift station to be located at Street "C" near Corral Hollow Road. Effluent collected at the new lift station will be pumped in a new force main to the existing Larch Road pump station, which will be expanded to accept the new flows. An existing force main connection will be utilized to tie to the Treatment Plant. This plan will reimburse the Hansen Road Collection System Project for the portion of the sewer, which they use.

### 3.7.2 Municipal Water System

#### 3.7.2.1 Water Supply and Treatment

The City of Tracy operates its own municipal water system and treatment works. The City's water supply comes from local wells and an annual entitlement of approximately 3,300 million gallons per year (mgy) from the Delta Mendota canal. The water treatment plant is located east of Tracy Boulevard just south of the Tracy Municipal Airport. In 1991, the City delivered approximately 3,163 mgy with 51 percent coming from the Delta Mendota and 49 percent from wells.

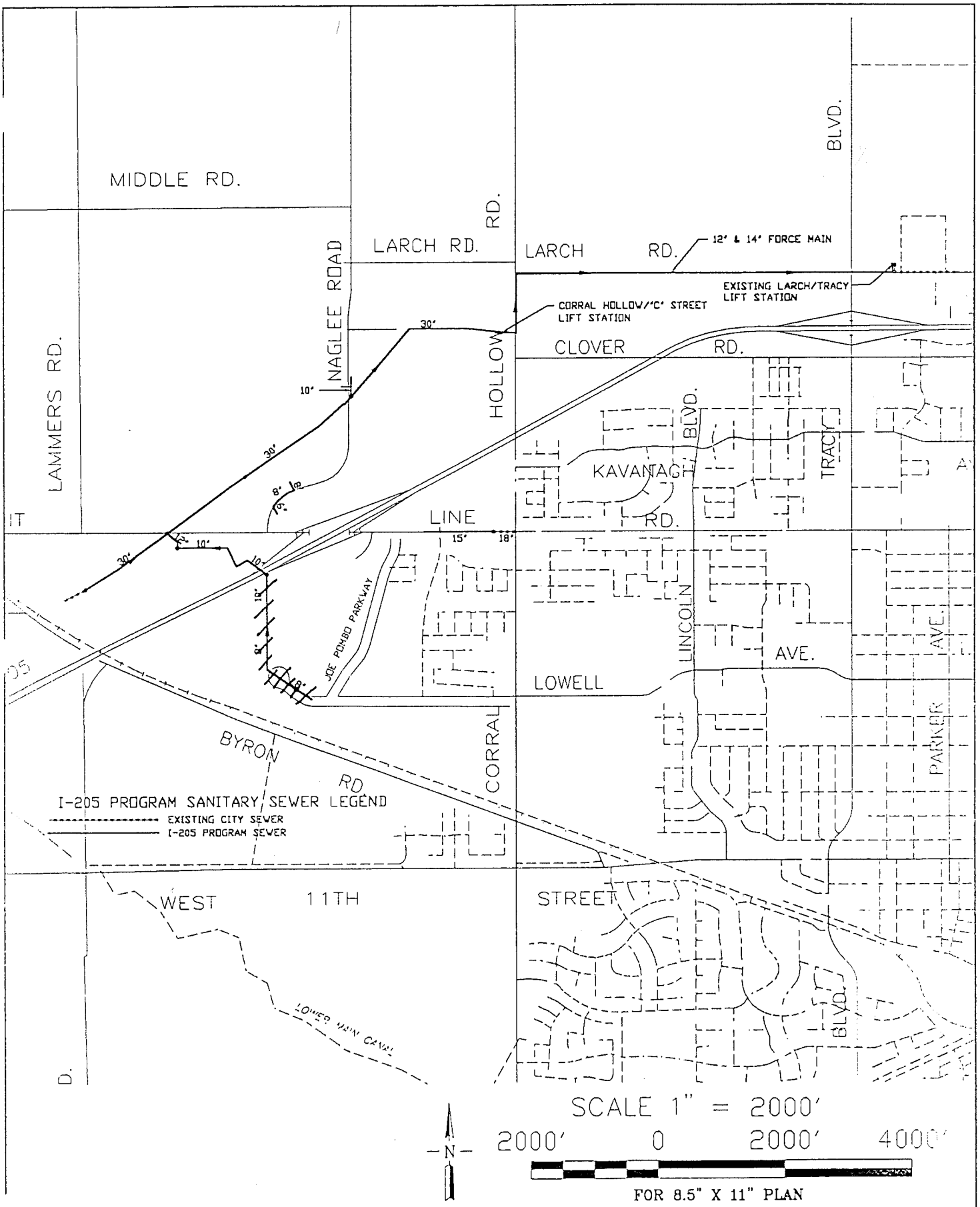


| JOB NUMBER: COT012 | SANITARY SEWER COLLECTION<br>GRANT LINE PLANNING AREA<br>I-205 CORRIDOR SPECIFIC PLAN AMENDMENT<br>CITY OF TRACY CALIFORNIA | Ruark and Associates<br>Consulting Engineers | FIGURE 3.7a |
|---|---|---|---|

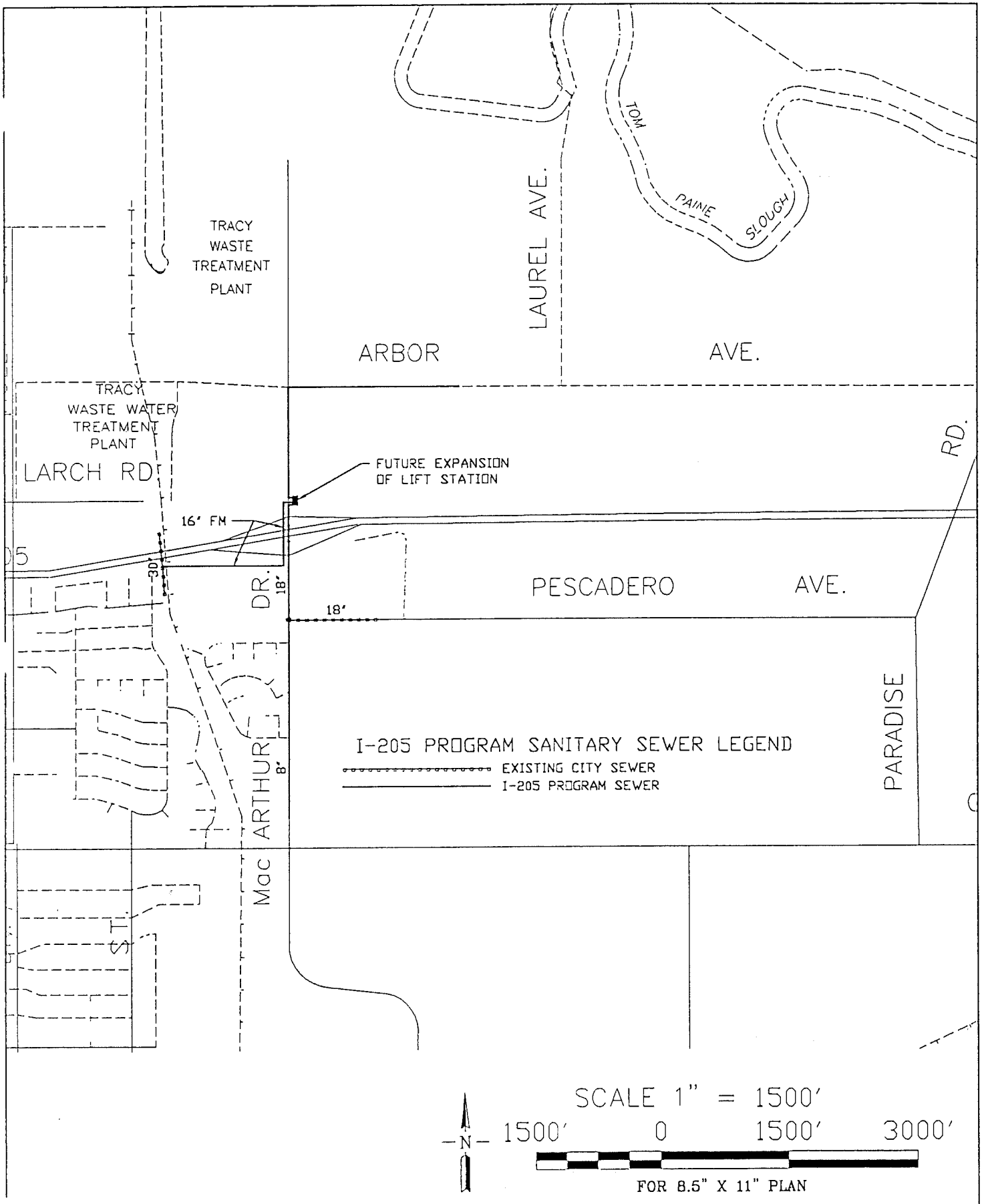


| JOB NUMBER: COT012 | SANITARY SEWER COLLECTION<br>Mac ARTHUR PLANNING AREA<br>I-205 CORRIDOR SPECIFIC PLAN AMENDMENT<br>CITY OF TRACY CALIFORNIA | Ruark and Associates<br>Consulting Engineers | FIGURE 3.7b |
|---|---|---|---|

Current City commitments to serve the existing City, Infill development, the Residential Areas Specific Plan and the Industrial Areas Specific Plan total approximately 5,300 mgy. Based on conservative assumptions regarding reliable ground water supply the City can deliver at least 4,800 mgy of water. The I-205 Specific Plan will add some 4.5 mgd or approximately 1,600 mgy of new demand to the City's water system. The City is currently evaluating the South San Joaquin Irrigation District (SSJID) project as an option for water supply and treatment. In the event this option is not successful, other options will be considered. This plan commits to participating in the expansion of the City's water supply and treatment system once option is selected.

#### 3.7.2.2 Water Distribution System

This Plan provides for expansion to the City's domestic and fire protection water distribution network. Figures 3.8a and 3.8b indicate the mains to be provided as a part of the water looped system needed to supply these areas. Figure 3.8c indicates the offsite water mains required to complete the westside looped main delivery system along Corral Hollow Road. The 24-inch and 16-inch mains shown on this Figure were installed by the Patterson Business Park Project. This plan will reimburse the Patterson Business Park Project for the portion of these mains, which they use.

### 3.7.3 Other Utilities

The existing providers of electricity and natural gas (Pacific Gas & Electric Company) and telephone (PacBell) have plans to provide utility service to the area as land is developed.

Two noteworthy long distance utility lines are located within the Plan area along Grant Line Road. The first of these is the AT&T transcontinental trunk, which is located on the south side of the road and contains both fiber optic and conventional phone cables. The second facility is a Chevron Oil Company high-pressure fuel line running along the north side of the road. These lines are extremely costly to repair and, in the case of the fuel line, dangerous if disturbed. The plan requires developers and contractors to contact these companies well in advance of design and construction so as to insure these features is not inadvertently disturbed.

All new utilities shall be placed underground in accordance with streetscape drawings showing no overhead utilities. All existing overhead utility facilities must be converted to underground facilities at the developer's expense where those facilities front the property.

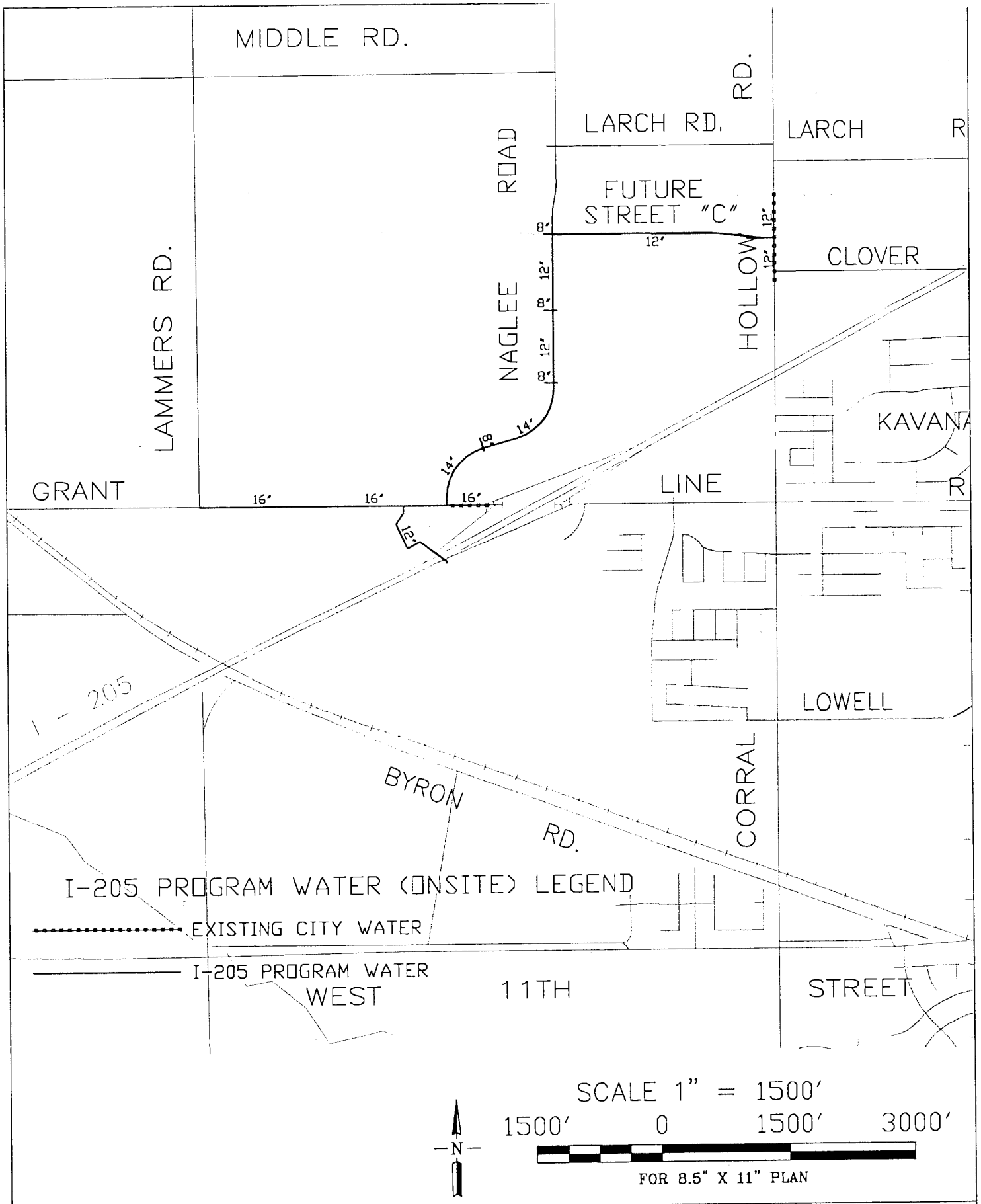


| JOB NUMBER: COT012 | WATER DISTRIBUTION<br>GRANT LINE PLANNING AREA<br>I-205 CORRIDOR SPECIFIC PLAN AMENDMENT<br>CITY OF TRACY CALIFORNIA | Ruark and Associates<br>Consulting Engineers | FIGURE 3.8a |
|---|---|---|---|

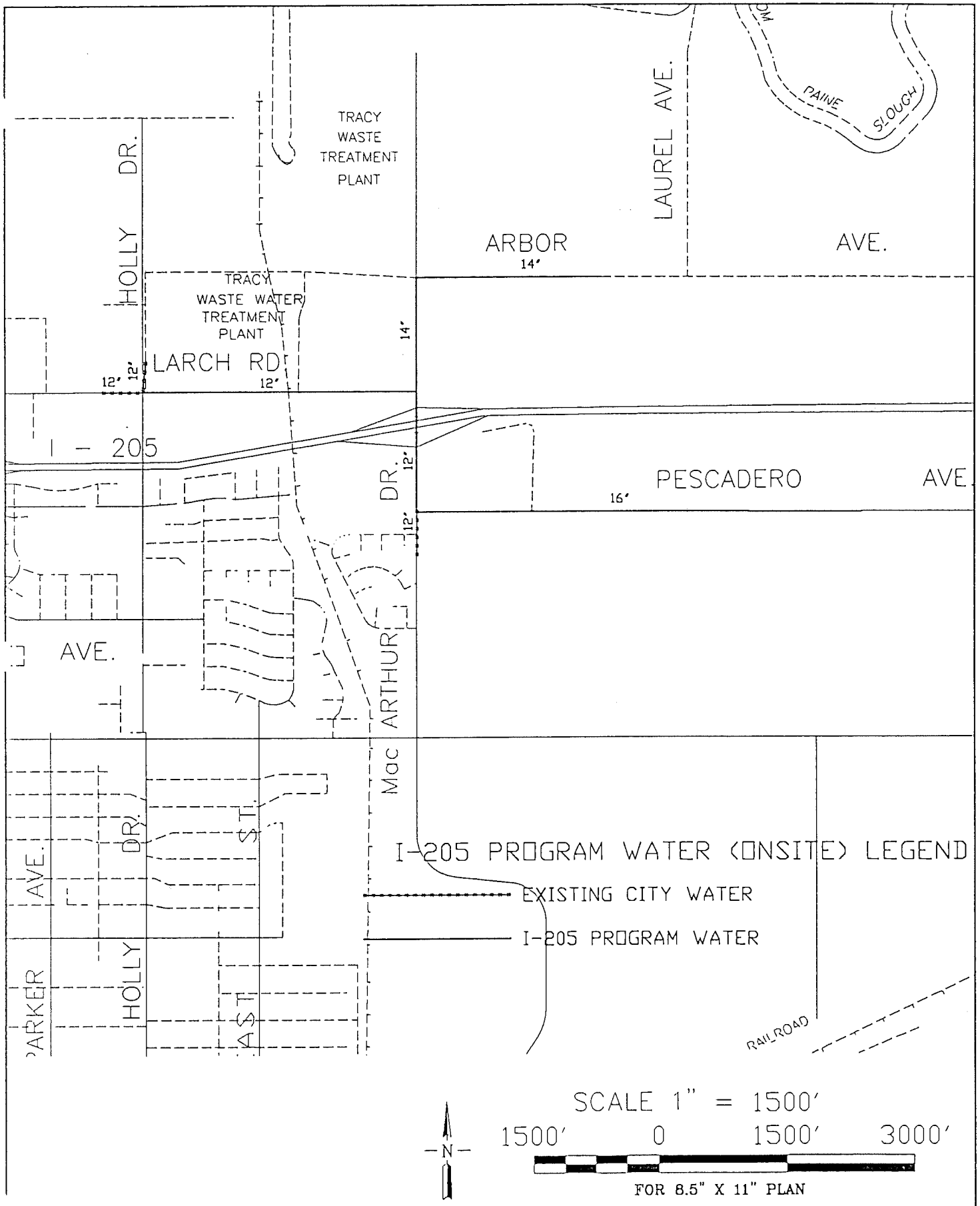


| JOB NUMBER: COT012 | WATER DISTRIBUTION<br>Mac ARTHUR PLANNING AREA<br>I-205 CORRIDOR SPECIFIC PLAN AMENDMENT<br>CITY OF TRACY CALIFORNIA | Ruark and Associates<br>Consulting Engineers | FIGURE 3.8b |
|---|---|---|---|

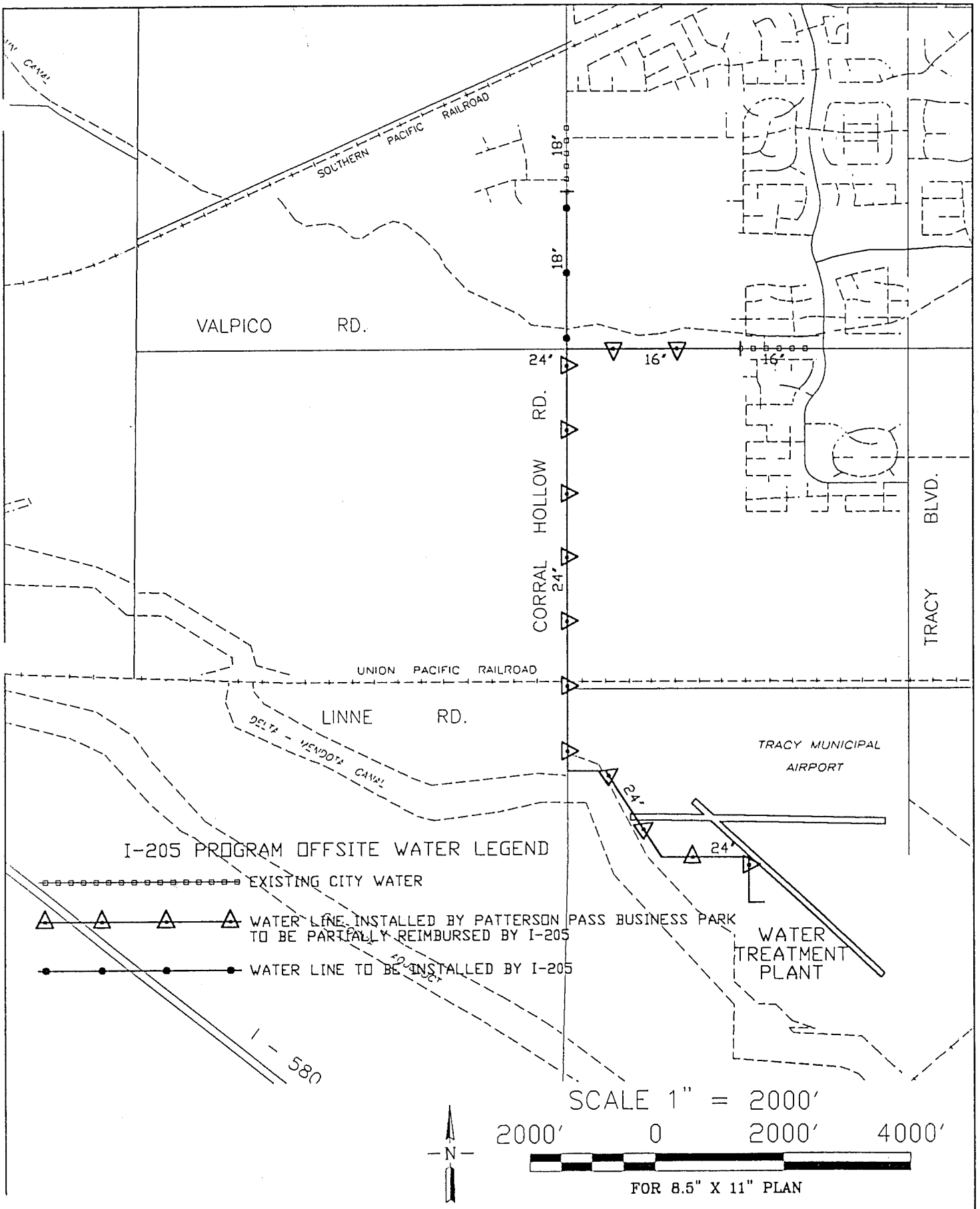


| JOB NUMBER: COT012 | OFFSITE WATER DISTRIBUTION<br>I-205 CORRIDOR SPECIFIC PLAN AMENDMENT<br>CITY OF TRACY CALIFORNIA | Ruark and Associates<br>Consulting Engineers | FIGURE 3.8c |
|---|---|---|---|

## 3.8 Solid Wastes

Solid wastes in Tracy are collected by Tracy Delta Disposal Company (TDDC) and disposed of in a joint City / County landfill site located seven miles south of town. The landfill site has only a three-year remaining capacity at current waste generation rates. Discussions between the City and County are now underway concerning where to send solid wastes once the existing landfill is closed. Locations under consideration include the Foothill Landfill in eastern San Joaquin County and the Altamont Landfill in Alameda County. Wastes from the plan area will be collected by TDDC for disposal at one of these two sites.

## 3.9 Air Quality Concepts

While Tracy is subjected to reduced air quality due to the emission from automobiles, solvents and pesticides "upwind" of town. Development in Tracy contributes to further "downwind" problems southward down the Central Valley. Recognizing the need to take a positive step in addressing the attainment of regional air quality standards the I-205 Specific Plan proposes a series of actions to contribute to improved air quality.

As most objectionable emissions are automobile related, the plan proposes an active campaign to encourage an enhanced ride-sharing program. The first measure is to provide for the development of a park-and-ride lot adjacent to the Grant Line Road Interchange. Secondly, the plan commits funding to support a program to encourage active Van-pooling and Ride-Sharing programs for Tracy residents working for the major employers in the Tri-Valley area. These measures are also discussed in Paragraph 4.2.6, *Transportation Systems Management.*

In addition to these active measures at preventing air quality degradation the plan budgets funds to assist in the implementation and operation of a regional air quality monitoring system. The plan provides a lump sum to the regional agency for this purpose.

Lastly, the City Council has adopted a policy on air quality management directing the development of an Air Quality Element of the General Plan to provide a comprehensive basis for mitigation of air quality degradation. This policy goes on to require the Air Quality Element to establish an offsetting fee schedule to provide resources to fund mitigation measures that may be identified in this Plan.

Development in the I-205 Specific Plan area is to be required to pay these air quality fees. The implementation of the specific air quality mitigation measures mentioned above shall be taken into account when establishing the dollar value of fees to be collected from Specific Plan properties.

## 3.10 Public Buildings

The Public Building fee applies only to residential properties in the I-205 Specific Plan. The purpose of the Public Buildings fee for the I-205 Specific Plan is to pay for I-205 residential properties' share of the Tracy Police facility, which was constructed in 1996, and its share of the site acquisition costs for the new Civic Center.

The I-205 Specific Plan Area, as well as all other development in the City of Tracy, has responsibility for certain public facilities needed to accommodate the projected growth and development in the area. State planning law requires the preparation of a Safety Element as a part of a city's general plan. Chapter 7 of the Tracy Urban Management Plan (UMP) contains the goals of the Safety Element, particularly Safety Policies 3.1 and 3.2 relating to fire protection and law enforcement. See Section 3.11, "Fire/Public Works Capital", for I-205 Specific Plan responsibility for fire protection.

In addition, although state planning law does not mandate or provide guidelines for the preparation of a Public Facilities element, Chapter 3 of the UMP provides a Public Facilities Element, particularly Public Facilities Policies 1.1, 3.1, 3.2, 3.3 and 5.1. As with other communities in California, the City of Tracy must assure methods of providing adequate infrastructure and community services to an expanding population as well as methods of financing these improvements. Community services such as police, fire protection, libraries, and medical facilities must be efficiently staffed, managed and located to meet the needs of citizens. If a proactive stance is taken, problems associated with a lack of responsiveness or capacity can be avoided. The evolution in public awareness regarding environment and the acknowledged costs to provide services dictates that Tracy must manage its resources carefully.

As part of the implementation of these two elements of the UMP, the Tracy City Council has adopted the "Implementation Plan for the Public Facilities and Services Element" of the UMP/General Plan. This Implementation Plan was prepared to identify facilities that are vital to providing governmental management. These facilities include cultural support facilities, parks and recreational facilities, civic institutions, educational facilities and police and fire protection to meet the needs within the future City of Tracy. The Plan identified and analyzed facility needs based on future populations. A key assumption in the Plan is that, as population expands, so does the need for facilities and infrastructure to manage local government.

Population and economic growth cause increases in demand for municipal services, which are important in defining a community's quality of life. The quality and provision of these facilities and services is linked to and impacted by new growth. In particular, the amount and location of development are significant factors. However, it is difficult to establish a direct correlation between an increment of growth represented by a development proposal and the additional cost and demand for these public services. Therefore, the impacts of growth on community services, including churches, hospital facilities, museums, cemetery sites and libraries are not quantified by level of service policies. They are located in response to projected population to interact with compatible land uses, and to serve the demand generated by the projected population.

The City's Public Facilities goals include:

Goal PF 1: Efficient management of public resources and facilities to ensure that a high level of service is maintained throughout the community.

Policy PF 1.1: Optimize use of planning area resources for efficient siting of public facilities.

Goal PF 3: Cultural and public community services that improve and maintain the quality of life for the residents of Tracy planning area.

Policy PF 3.1: The City will meet the cultural, spiritual and health related needs of the community by designating standards for and incorporating such facilities and services in development proposals.

Policy PF 3.2: The City shall promote consolidation of complimentary or support services to avoid duplication of programs offered by various neighborhoods, the City and adjacent jurisdiction.

Policy PF 3.3: Provide for adequate library facilities and services consistent with community needs and coordinated with the County; and provide a focus for community activity and cultural development.

Goal PF 5: Establish education and information programs for the residents of the City of Tracy.

Policy PF 5.1: Establish programs for senior citizens and youth to provide information regarding area services including cultural, recreation, and public safety services.

Goal SA 3: A community safe and secure from personal injury and loss of property.

Policy SA 3.1: Provide fire protection and law enforcement to ensure the public's health and safety.

Policy SA 3.2: Ensure that City emergency response procedures are adequate in the event of natural or man-made disasters.

The Residential Area Specific Plan (RSP) required mitigation for impacts to public facilities through payment of a Public Building fee. Throughout the implementation of the I-205 Specific Plan, the City has required mitigation for the impacts on public buildings through fees set forth in the residential project finance plans for GL-23, GL-24 and GL-25.

### 3.11 Fire / Public Works Capital

The residential and non-residential properties of the I-205 Specific Plan area have been identified as creating an increased demand on fire and capital facilities, due to the increase in population. The purpose and use of the fee for Fire/Public Works Capital for all I-205 properties is to contribute to the construction of fire station capital improvements in the northwest Tracy area, and to participate in the purchase of one new fire engine.

# CHAPTER 4 - DESIGN STANDARDS AND GUIDELINES

## 4.1 Land Use

The following standards and guidelines provide direction and specific design requirements for each land use within the Specific Plan Area. They are intended to ensure that the quality and fundamental concepts established at the master planning stage are maintained in the final phase of detailed planning and design. These guidelines provide a unified and harmonious concept for the blending of uses within the Specific Plan Area as well as for the transition with surrounding uses.

### 4.1.1 Residential Uses

#### 4.1.1.1 Affordable and Equal Opportunity Housing

Encouraging the diversity of housing opportunities has been a long-standing policy in Tracy. The following list of programs are suggestions for ways developers and the City can work together to maintain this policy within the Specific Plan areas.

- Provide a range of unit sizes, especially within medium density and high density areas.
- Negotiate a reduction in development fees and/or exaction's in exchange for the long-term provision of "very low" and "low" income units.
- Encourage an appropriate proportion of new ground-floor, multiple-family housing units to be usable by handicapped or elderly persons.
- Assist city residents and potential developers by:
  - a. Providing information concerning the availability of state or federal programs offering housing assistance to low income and "special needs" households.
  - b. Providing assistance in contacting appropriate agencies and in submitting applications for appropriate projects.
- Provide for a reduction in the number of parking spaces required for housing reserved exclusively for occupancy by elderly persons.

### 4.1.1.2 Planning Overview

The major feature of the plan south of the freeway at Grant Line Road is a 200+ acre residential development area. The basic design standards and guidelines for each of the plan's three residential designations are to be found in the Tracy Zoning Ordinance. Proposed here are additions and alterations to existing standards in response to constraints and opportunities unique to the specific plan area and the PUD concept.

### 4.1.1.3 Residential Standards

A. Permitted and Conditionally Permitted Uses

Certain land uses are permitted under each residential land use designation of the Tracy General Plan. The Plan also lists permitted uses, which are subject to the granting of a use permit. The land use designations and permitted and conditionally permitted uses are specified in Appendix A to this Plan.

B. Siting Requirements

The City of Tracy Zoning Code includes certain minimum residential property development standards. Many of these standards have been reproduced below in summary for reference. Please refer to the City Zoning Regulations for complete restrictions, which remain valid unless modified herein. It should be understood that adherence to these minimum standards will not automatically create a project that will be acceptable to the City. The adopted standards are intended to provide flexibility for creative and efficient site planning, and innovative architectural solutions. They are not intended to be used to create substandard developments. Figures 4.1 and 4.2 illustrate many of the stated criteria below.

1. Minimum Lot Size:

| Land Use Destination | Lot Size, s.f. |
|---|---|
| LDR | 5,600 |
| MDR | 3,600 |
| HDR | 1,740 |

2. Building Coverage and Height:

| Land Use | Max Density (d.u./acre) | Max. Bldg. Coverage | Minimum Lot Width | Maximum Lot Depth | Maximum Bldg. Ht. |
|---|---|---|---|---|---|
| LDR-4.6 | 4.6 | 45% | 56' | 90' | 2-1/2 stories or 35 feet |

| | | | | | |
|---|---|---|---|---|---|
| MDR-6.1 | 6.1 | 45% | 45' | none | 2-1/2 stories or 35 feet |
| MDR-8.0 | 8.0 | 45% | 45' | none | 2-1/2 stories or 35 feet |
| HDR-19.0 | 19.0 | 45% | none | none | none |

Exception: When driveway to the lot is from an alley and there is no curb cut for a driveway along the front lot line minimum lot width in MDR zone is 35 feet.

3. Building Setbacks: Shall be as specified below and illustrated in Figures 4.1 and 4.2.

a. Front: LDR, MDR, and HDR: Thirteen feet to property line; 18 feet from back of sidewalk to garage door. Garages set back less than 20 feet from back of sidewalk shall be provided with a roll-up garage door. Single story swing-in garages to be set back 10 feet from property line. Any second story or any habitable space shall be set back 15 feet from property line. LDR and MDR units shall have at least a 2 foot differential in front setback between neighboring buildings.

b. Side: LDR - Minimum of 4 feet on either side. Minimum of 14 feet between structures. MDR - Minimum of 4 feet on either side; minimum of 11 feet between structures. MDR (Zero Lot Line) - Ten feet on one side; 0 feet on the other; 10 feet on exterior side yards (see Figure 4.3).

c. Rear: LDR and MDR: A minimum of 10 feet and an average depth of 15 feet. At least 840 square feet of rear yard in LDR and 675 square feet in MDR. HDR: Ten feet; this shall be increased by 4 feet for every story above the second story. Detached accessory structures may be located in the required rear yard.

d. Other: In MDR no garage shall exceed sixty-percent of the lot width unless the driveway enters from an alley.

e. Other: Residential building shall be setback a minimum of 80' from the centerline of any railroad track.

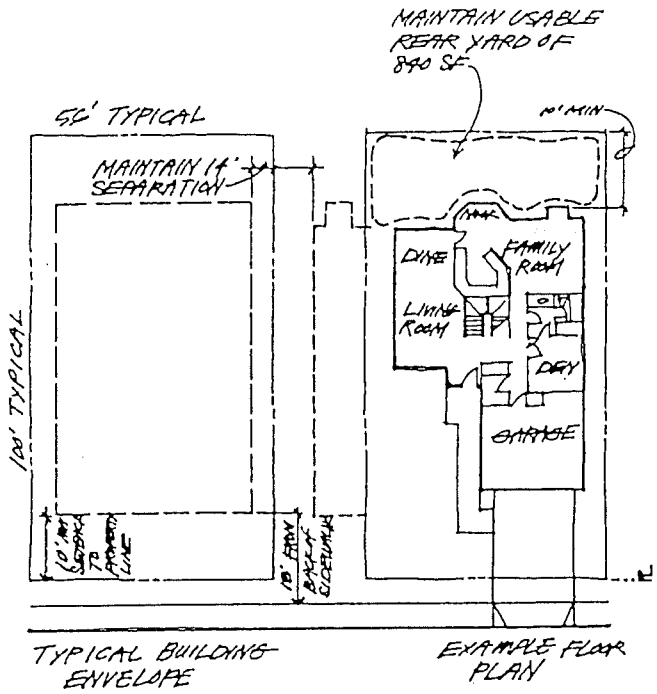


*Figure 4.1 - Low Density Development (Example Lot Size: 56' X 100)'*

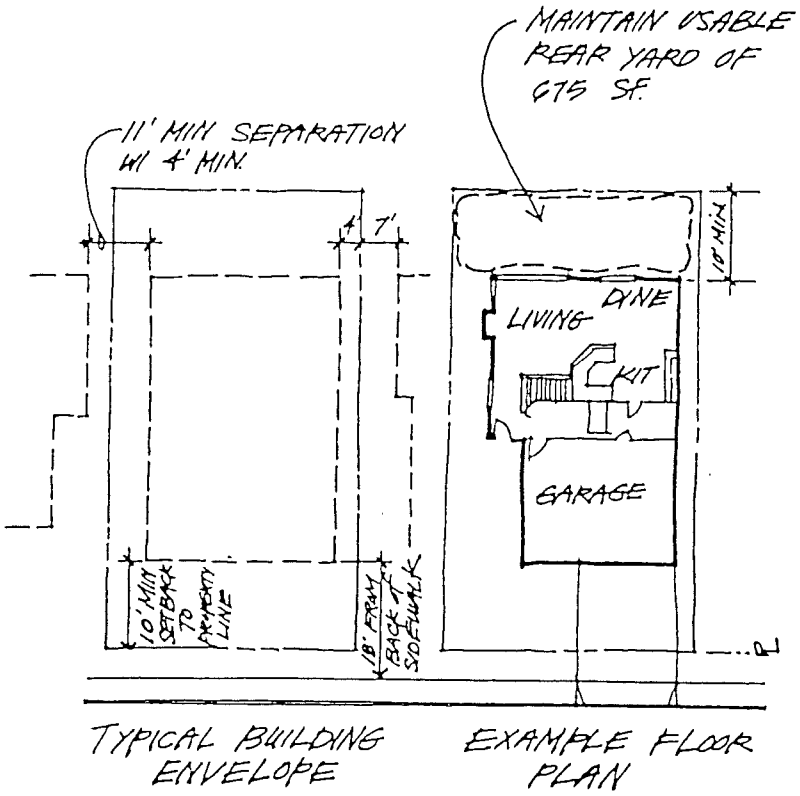


*Figure 4.2 - Medium Density Development Example Lot Size: 45' X 80')*

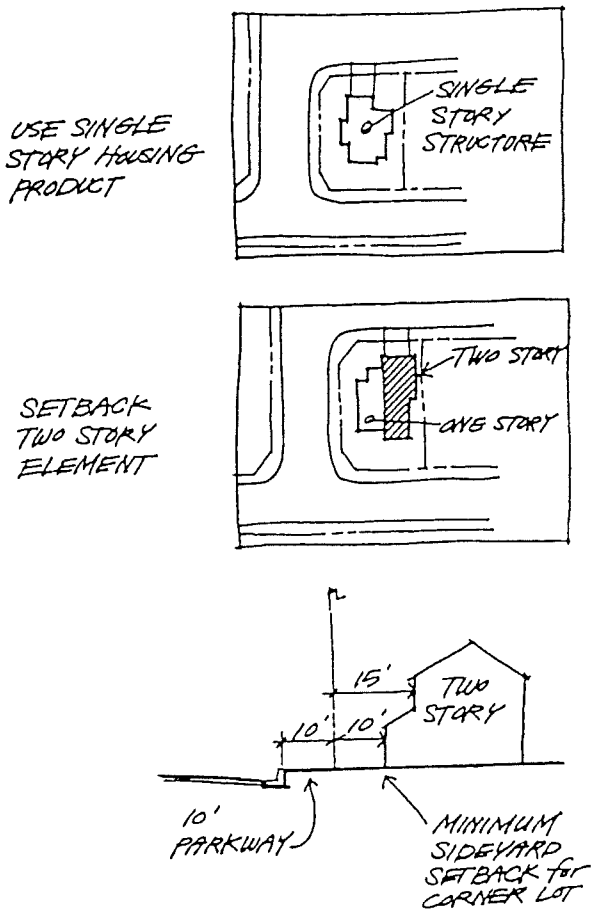


*Figure 4.3 - Corner Lot Treatment With Small Lots*

4. Site Planning

a. General: Issues to be considered during site planning include:

Lot to lot relationships.

- Drainage patterns
- Elevation variations (contours)
- Minimizing of solar orientation conflicts
- Visual screening potential
- Sound screening potential
- Lot line to building wall locations

Siting of units.

- Solar orientation
- Indoor/outdoor relationships (privacy, views, noise screening)
- Streetscapes (setbacks, interest, interplay between units driveways)
- Construction problems
- Fire fighting access

Unit floor plan adaptabilities.

- Acceptable footprint for given lot sizes
- Solar orientation potential
- Outdoor area privacy screening
- Garage/driveway locations

b. Single Family Housing (LDR)

On the following pages a series of lot/building schematics are presented to provide additional guidance in the design of single family and duplex housing types. It should be stressed that the schematics and building envelopes of this section are prototypical concepts and are not intended to constrain more creative solutions to spatial relationships.

1. Buildings within a neighborhood grouping shall include a variety of roof lines, building heights, color schemes and setbacks to achieve visual interest. Streetscape elevations are to be submitted with the development plan application.

2. Where feasible, east / west street orientation is encouraged to facilitate passive solar energy heating.

3. Buffering between single family development and major roadways or non-residential uses shall be provided through project design and/or a landscaping plan approved by the City.

4. Special attention shall be paid to the siting and design of corner lot units in small lot subdivisions. Figure 4.3 illustrates how the use of single story or stepped, two-story homes can create an attractive yard and streetscape.

5. Adjacent to open space corridors utilize open-ended cul-de-sacs (Figure 4.4) to provide convenient access to these amenities.

6. Fences shall have a finish trimmed look, of good design and quality materials compatible with the house design. Fences shall be located to allow for proper policy and fire safety practices.

c. Multi-Family Products (MDR and HDR)

1. Site plans for multi-family products should consider: indoor and outdoor privacy, solar access, building configuration and appearance, and overall project design appeal. Buildings should be oriented to create courtyards and open space areas, thus increasing the aesthetic appeal of the site. These areas should be connected with the on-site pedestrian circulation systems.

2. Residential subdivision designs should avoid long, straight streets. Where a street must be long, it should be curved such that there is an off-set equal to the width of the street over a viewing distance. This will help to reduce speeding and noise impacts on adjacent homes.

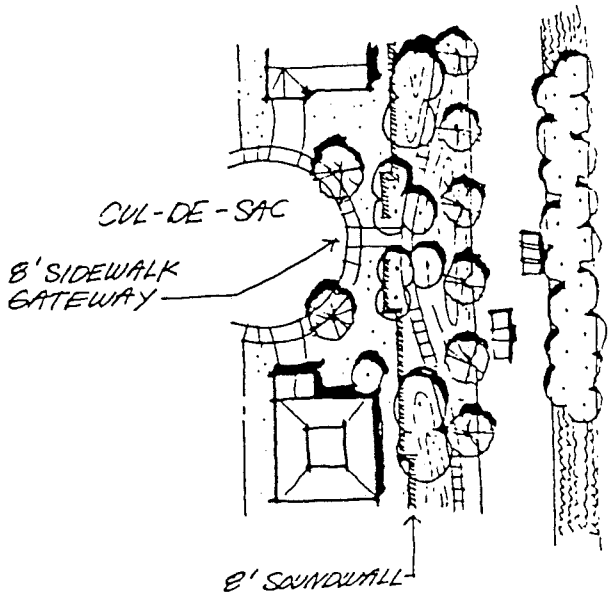


*Figure 4.4 - Open Cul-de-sac Plan*

3. Apartments shall be setback and oriented away from the freeway and are to have a minimum of windows facing the freeway. Boundary walls shall also be provided where necessary to provide sound attenuation.

4. In multi-family developments provide each unit with its own identity and entry. This can be accomplished with a variety of site planning techniques (see Figure 4.5) which will also provide variety in the streetscape.

5. In preparing site plans for high-density housing provide "windows" and varied setbacks to public roadways so as to create a varied interesting street frontage (see Figure 4.6).

5. Architecture

a. The architectural style of new residential developments should compliment the existing character of Tracy. Buildings should relate to the relatively small scale of adjacent structures and incorporate such elements as variation in texture and materials in the design of facades and architectural details.

b. All building second story elevations facing the street shall have windows or other significant architectural features.

c. Building architecture should incorporate a variety of units, building sizes and heights, and color accents.

d. Building facades should include relief to avoid monotonous appearance. Stairwells should, in all except affordable housing developments, be covered and integrated into the overall building design, and private spaces such as patios or balconies are encouraged for each unit. Another design consideration is the need to buffer group parking areas from the street and adjacent properties. A few of these design concepts are illustrated below and on the following pages.

6. Parking

The amount of parking required within each residential land use designation is specified in the City of Tracy Municipal Code, which shall be valid for this Specific Plan area unless modified below.

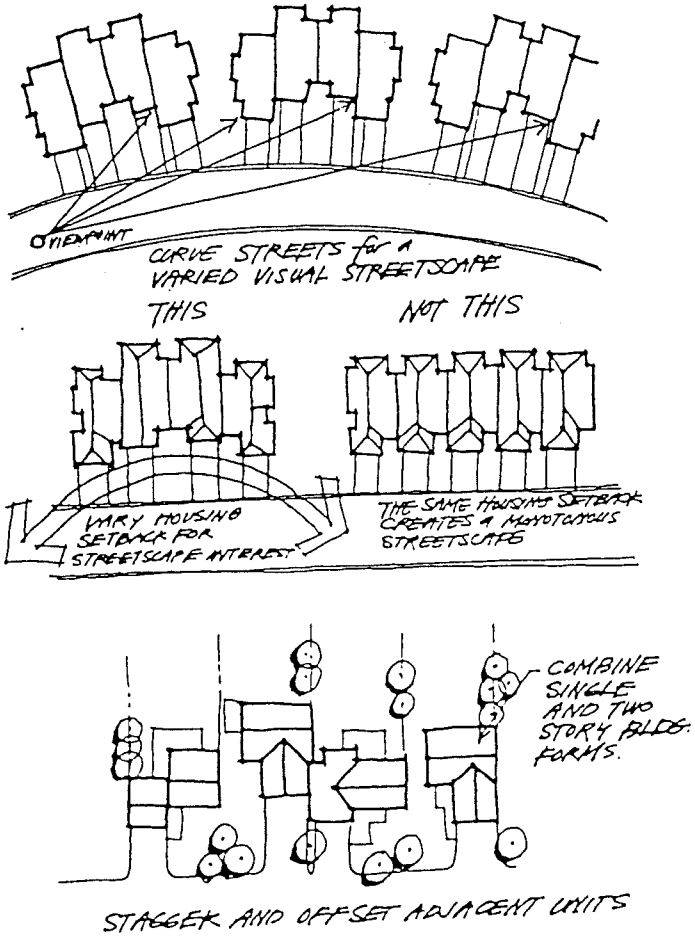


Figure 4.5 - Multi-Family Street Orientation

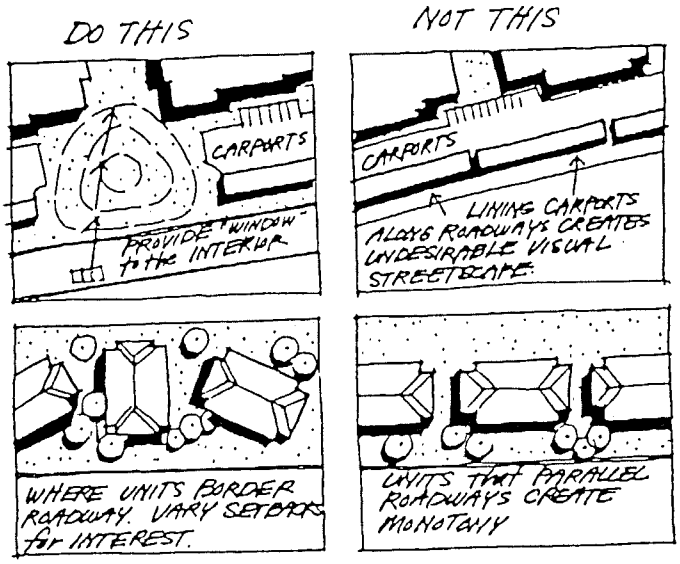


*Figure 4.6 - High Density Site Concepts*

a. Parking requirements:

| Uses | Minimum Parking Spaces Required |
|---|---|
| Single-family residential | Two (2) non-tandem enclosed (ingarage) spaces per unit. Attached or detached. In addition for all attached duets or townhouses in the MDR-8.0 zone as shown in Figure 3.1b provide one space of on-street parking per dwelling unit within 200' of dwelling unit. Exception: housing designated by the City as very low or low income housing program, in which case only one of the two spaces per unit is required to be enclosed. |
| Attached single or multi-family residential Studio or one bedroom | One and one-half (1-1/2) spaces with one covered per unit, plus one space for every units marked "Guest". |
| Two or more bedrooms | Two (2) spaces with one covered per unit, plus one space for every five units marked "Guest". |

b. Detached and attached units (LDR / MDR):

Driveway width - Nine feet wide minimum: 28 feet wide maximum driveway and curb. Two car garages shall be limited to a 20 foot wide driveway and curb opening. Three car garages shall be limited to a 28 foot wide driveway and curb opening.

Distance between driveways - 9' min. (detached), 3' min. (duplexes).

c. Beyond providing the number of spaces required, the design of common parking areas for attached and multi-family neighborhoods is an important element in site planning. Figure 4.7 illustrates some design concepts for these parking areas, with particular attention to open parking lots.

d. Attached garages tend to increase building setbacks, land coverage, and private outdoor space. An expansion of site planning choices with such program variations as turned garages relieves the forced regularity of straight building blocks. Moreover, variation may break the linear mass of a building while creating a private entry or patio space. Great flexibility is created at a point where privacy, identity, and territorial needs must be met.

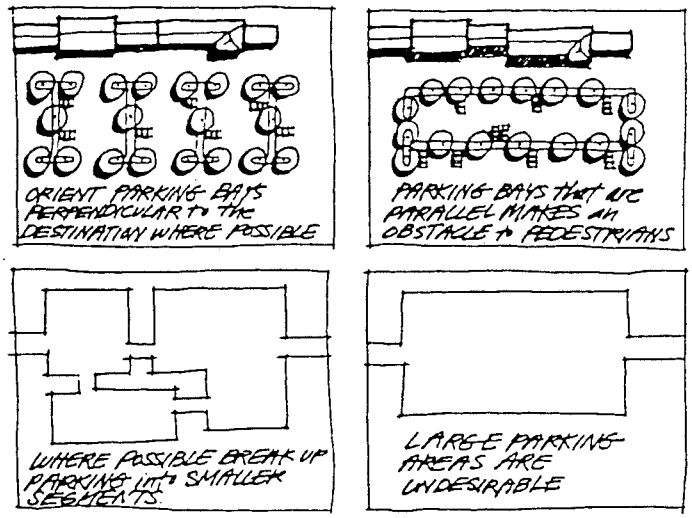


*Figure 4.7 - Multi-Family/High Density Parking Concepts*

e. Where clusters or banked garages are used, building should vary in size and length from the residential structures, becoming a visual contrast to the homes rather than a uniform repetition of the same form. This creates the opportunity to let the house form have its own visual character and not be dominated by the character of a garage.

f. Surface parking areas shall be distinguished in smaller lots. If surface parking is provided near public streets, these areas shall be screened or heavily landscaped to minimize the view from the street.

g. Provide off-street pathways to move pedestrians from their autos to building entrances with ease.

h. Off-street parking should be provided in locations that are convenient to the use or uses it serves. The distance from the parking area to any use should be reasonable and customary for the type of land use.

i. All parking facilities shall have lighting in accordance with the current City Standards. The lighting source shall be shielded so as to direct rays to site areas and away from windows of residential buildings.

C. Design Guidelines

1. Transitions/Edges

The interfaces between uses, or "edges", are extremely important in creating an overall harmony in community design. Site planning and landscaped design should not terminate at the boundary of an individual parcel, but should make a design connection with the adjacent use. Six common edge conditions are discussed and sketched below as examples of how to appropriately respond to typical situations.

a. Freeway Edges (See paragraph 4.3.5)

b. School/Park Interfaces with Residential

Although elementary schools and parks are generally considered to be compatible with residential uses, some level of conflict is unavoidable and a buffer must be provided. Wherever possible the

buffer should include a berm or other grade separation. Dense planting and fencing should also be provided to create a physical and visual separation. These features should provide an aesthetically pleasing perimeter to the school or park while minimizing the intrusion of noise and distractions to the adjacent home sites.

The subdivision should be designed so that the streets, sidewalks, pedestrian and bicycle ways connect with the appropriate neighborhood open space and park system.

c. Railroad Interface

The railroad is a source of both noise and vibration. In order to provide an acceptable housing environment along the railroad both large rear yard setbacks and solid masonry walls will be required. Preliminary reports indicate the need for a 6 foot high soundwall with the units setback 85 feet from the center of the Tracy. These requirements should be corroborated in the course of the processing of the Development Plan (see Chapter 5).

d. Drainage Easement

A major drainage easement runs through the southeastern portion of the plan area adjacent to parcel GL-25. This corridor abuts development parcels and represents both an opportunity and constraint. The opportunity arises from the open space characteristics of the feature, which also incorporates the trail network. The constraint lies in the limitations on the type of landscaping that can occur consistent with flood control restrictions. Nonetheless, a fundamental design concept is that the easement interface should not become a hard brown edge; landscaping on the adjacent parcels should be blended into the easement area to create a soft edge. See the Landscape Design section for additional information.

e. Commercial Interface

Medium and high-density units should be located as transitional uses between industrial or commercial centers and low-density.

D. Auxiliary Site Features

a. Support facilities (such as recreation center, sales offices, etc.)

Design and architectural forms to be consistent with its residential development.

Centrally locate communal use facilities.

b. Mail boxes:

For multiple family developments locate common mailbox service near project entries or recreational facilities. The architectural character shall be similar in form, materials and colors to the surrounding building. Mailbox locations must be approved by the U.S. Postal Service.

Individual residential mailboxes should be incorporated with the building when possible. If a curbside structure is required, locate mailbox adjacent to the driveway. Design and materials should reflect building architecture.

c. Trash Enclosures:

Trash bins in multi-family developments shall be fully enclosed with 6' high walls and a solid gate. Individual residential trash storage areas shall be screened from public views. Location of trash enclosures in multi-family areas shall be conveniently accessible for trash collection and maintenance.

d. Mechanical Equipment:

All air conditioning / heating equipment, soft water tanks, gas meters, and electric meters must be screened from public view as per local utility requirements. Sound attenuation is encouraged. All antennas are restricted to the attic or interior of the residences.

E. Signs

a. Permanent Signs

The purpose of a planned sign program is to provide a continuity of design which will contribute to an integrated, well-planned, high quality environment. All signage must be approved under the provisions of the adopted sign ordinance.

Permanent signs include:

1) Community entry signs;

2) Neighborhood entry signs;

3) Identification signs for parks, schools, and other Public and private recreational facilities;

4) Street name signs; and

5) Vehicular control and information signs.

- Each freestanding sign shall be located in a landscaped area which is of shape, design, and size that will provide a compatible setting and ground definition to the sign.

- Signs shall be designed so as not to obstruct any pedestrian, bicyclist or driver's view of the street right-of-way.

- Signs shall be designed to be simple with easily legible information.

- Each sign shall be designed with the intent and purpose of complimenting the architectural style of the main building or buildings, with respect to visual elements such as construction materials, color and other design details.
- Each sign shall take into consideration visual compatibility with the residential area, but should be legible to motorists.

- Where there is more than one freestanding sign located upon a lot, all such signs shall have designs that are complementary to each other by similar treatment of the following design elements:

    - Type of construction material
    - Letter style of sign copy
    - Support structure or method
    - Shape of the entire sign.

b. Temporary Signs

Temporary signs will be used to identify and direct traffic to specific neighborhoods and products during construction and sales periods. These signs will be subject to permit approval for specified periods of time.

Temporary signs include:

1) Neighborhood/product directional signs

2) Product identification signs

3) Secondary directional signs

4) Future facility signs

5) City recognition signs

6) Off-site kiosk signs for home sales

Concepts for good temporary sign design are illustrated in Figure 4.8.

F. Fencing and Walls

One of the most dominant visual elements of a community is its fencing and sound attenuation walls. It is essential for this element to be aesthetically pleasing and provide continuity in design to unify the various architectural styles within the individual neighborhoods into a single community theme.

Fences and walls can serve many functions including security, identity, enclosure, privacy, etc. However care must be exercised in the design of fencing in order to avoid long, boring or awkward sections of fencing. It is intended that the available fencing types be combined to attract interest and provide variety. Using a combination of open and solid styles, changing angles and directions is encouraged. Long straight runs of a single fence style are monotonous and inappropriate. Stepping the fence line to avoid monotony is encouraged. Figure 4.9 shows some concepts for designing coordinated fencing heights.

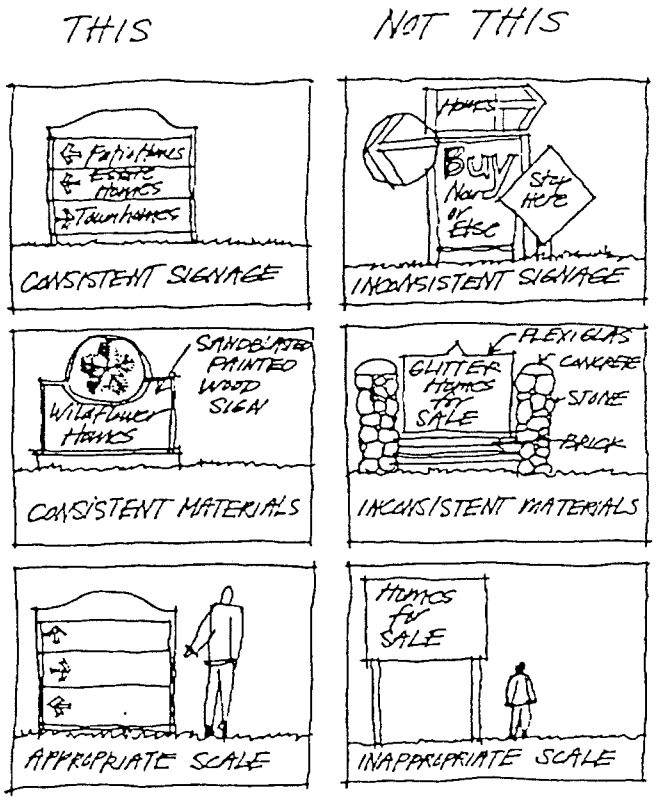


*Figure 4.8 - Temporary Sign Design Concepts*

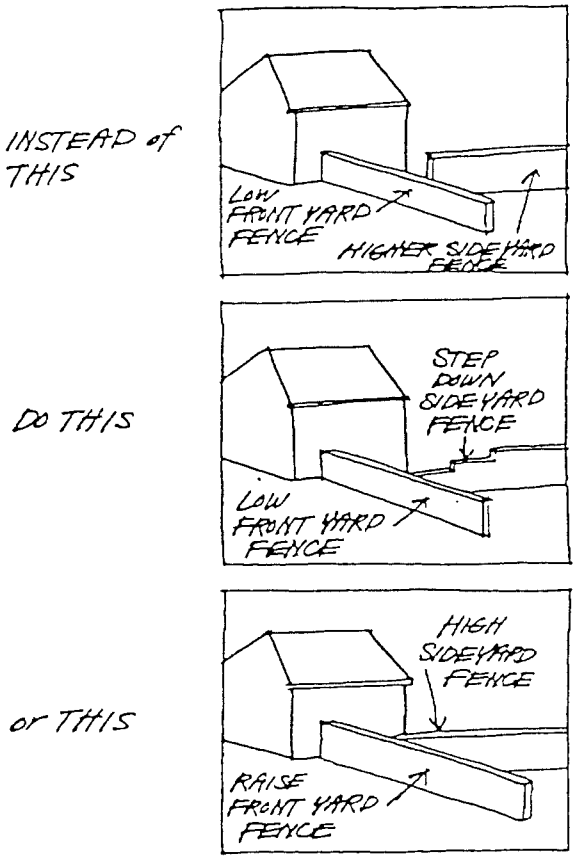


*Figure 4.9 - Coordinating Fence Heights*

- Walls should be made of a textured surface material that is compatible with the design of the neighborhood area.

- Landscape planting should be used to supplement and soften fencing and soundwalls; softening long lengths of fence with vines and shrubs is encouraged.

### 4.1.2 Commercial and Industrial Uses

#### 4.1.2.1 Overview

The commercial and industrial design standards and guidelines are separated into sections identifying general and specific provisions for each land use designation. In Paragraph 4.1.2.2, General Commercial and Industrial Standards, the provisions common to all commercial and industrial areas are presented. This includes the comprehensive list of Permitted and Conditional Uses in each area. Following these general standards Paragraph 4.1.2.3, Commercial Standards, and 4.1.2.4, Industrial Standards, present the more specific requirements.

#### 4.1.2.2 General Commercial and Industrial Standards

A. Threshold Design Guidelines

1. General

The planned expansion of the City's infrastructure systems has been based on certain design criterion. In general each system has been master planned and in so doing a contribution to demand or discharge has been allocated for each parcel.

Provided the uses proposed and submitted are designed at or below these design thresholds, properties will not trigger supplemental environmental review pertaining to these issues. A calculation must be provided with each Planned Unit Development submittal indicating how the proposed plan is accommodated within these thresholds. These calculations shall be based on the factors identified below and submitted as specified in Chapter 5.

All threshold factors are based on a theoretical net acreage calculated by multiplying the land use acreage's shown in Table 3.1 by 85 percent to account for land occupied by roads, easements and other undevelopable areas.

## 2. Circulation

To monitor traffic levels and phase construction of transportation improvements, Circulation Threshold levels have been established. These levels define the land use entitlement in terms of evening peak hour traffic. The following factors shall apply:

| Land Use Designation | P.M. Peak Hour Traffic (trips/acre) |
|---|---|
| CC | 32.31 |
| GC | 36.50 |
| FC | 51.84 |
| SC | 30.25 |
| LI | 13.10 |
| | trips/unit |
| LDR | 0.95 |
| MDR | 0.61 |
| HDR | 0.42 |

## 3. Major Utilities

The infrastructure systems to serve the properties within the Specific Plan areas have been designed to the following criteria.

| Sewers | Land Use Designation | Average Flow (gpad) |
|---|---|---|
| | CC | 1,090 |
| | GC | 1,850 |
| | FC | 4,575 |
| | SC | 2,150 |
| | LI | 2,150 |
| | | (/unit/day) |
| | LDR | 314 |
| | MDR | 304 |
| | HDR | 212 |

| Water | Land Use Designation | Average Flow (gpad) |
|---|---|---|
| | CC | 1,740 |
| | GC | 2,540 |
| | FC | 5,400 |
| | SC | 2,860 |
| | LI | 2,740 |
| | Parks/Open Space | 2,600 |
| | Street Landscape | 2,600 |
| | | (/unit/day) |
| | LDR | 550 |
| | MDR | 400 |
| | HDR | 250 |

Storm Drainage

Utilize the "Rational Formula" (Q = CiA) for design with the City-adopted rainfall intensity/duration curve (for "i"), a "C" factor of 0.90 and City adopted design methods for office, industrial and commercial land uses.

B. Permitted and Conditionally Permitted Uses

Appendix A to this plan indicates which uses are to be permitted and permitted subject to conditions in each land use designation of the Plan.

Auto dealerships shall be permitted, including sales and service, washing waxing or detailing, painting, rental or leasing, service stations and automobile supply stores **only** in that area designated by the I-205 Corridor Specific Plan as described in Figure 3.1b, Tracy Auto Mall and comprising parcels GL 2, 3, 4, 12 west portion and 13 subject to approval of a Preliminary and Final Development Plan, pursuant to the provisions of the Planned Unit Development Ordinance, Tracy Municipal Code, Title 10, Planning and Zoning, Chapter 10.08, Article 13, Sections 10.08–1760 et seq. All auto dealerships located **outside** the area designed in Figure 3.1b shall conform to the requirements of Auto Center uses as described in Appendix A of this Plan.

C. Siting Requirements

1. Minimum Lot Size: To be established in the process of Development Plan review. (See Chapter 5).

2. Building Coverage and Height: To be governed by the type of building under consideration. The following guidelines will apply to all districts.

| Land Use | Maximum Bldg. Coverage | Maximum Floor Area Ratio | Maximum Bldg. Ht. |
|---|---|---|---|
| Retail - Commercial Center | 30% | .30 | 55' |
| Retail - All other Districts | 25% | .25 | 40' |
| Office, One Story | 35% | .35 | 25' |
| Office, Two Story | 35% | .40 | 40' |
| Office, Three Story | 35% | .45 | 55' |
| Hotel/Motel | 25% | .40 | 55' |
| Restaurant, Free Standing | 12.5% | .125 | 40' |
| "Van Court/ Flextech" | 35% | .35 | 1 story (40') |
| Light Manufacturing/ Assembly | 45% | .45 | 1 story (40') |
| Warehouse/ Distribution | 50% | .50 | 1 story (40') |

3. Building Setbacks: The following shall be the minimum building and parking setbacks required for all building types (Figure 4.10).

   a. Building setback from any property line: 25 feet.

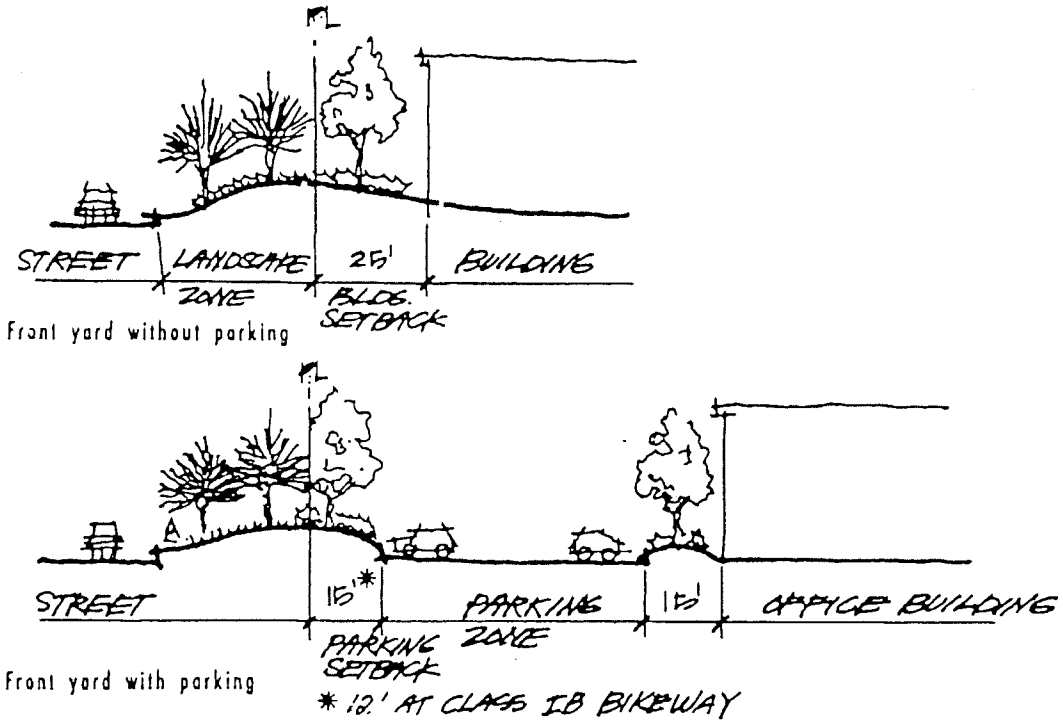


*Figure 4.10 - Minimum Setback Guidelines*

b. Parking setback along internal property lines and adjacent to buildings shall be 5 feet except as modified below for industrial development (Paragraph 4.1.2.5 C).

c. Parking shall not be permitted within 15 feet of any property line along a public street or the CalTrans right-of-way. The only exception shall be a Class IB bicycle path is located along the street frontage. In this case the parking setback shall be 12 feet.

d. Parking shall not be permitted within 15 feet of any office building. On warehouse/distribution buildings parking shall not be permitted within 15 feet of the office face or portion of the building. On other light industrial buildings a 15 foot setback to parking shall be provided at building entries.

4. Where a residential use abuts a commercial or industrial use, design review shall be required as a part of the Development Plan process to ensure the provision of adequate buffers. Soundwalls, additional screening, larger setbacks or height limitations may be required.

D. Parking and On-Site Vehicular Circulation

1. Parking, on site circulation and loading area standards shall be as required by the provisions of Article 26, Off Street Parking Requirements, of Tracy Municipal Code unless modified below or as part of the PUD Final Development Plan approval.

2. Minimum Off Street Parking Standards:

| Uses | Minimum Parking Spaces Required |
|---|---|
| COMMERCIAL | |
| Retail | One space per 250 square feet of gross floor area |
| Retail, Mall | One space per 250 square feet of gross leasable area |
| Vehicle sales and rentals, including recreational vehicles and mobile homes | One space per 250 square feet of gross floor area plus one space per vehicle for sale or stored on lot |
| Offices: business, professional (not including medical or dental), banks | One space per 250 square feet of gross floor area |

| | |
|---|---|
| Dental and medical clinics or offices | One space per 200 square feet of gross floor area |
| Motor vehicle repair garages | One space per 600 square feet of gross floor area; repair stalls not counted as parking spaces |
| Mortuaries and funeral homes | One space per four (4) fixed seats, or one space per 40 square feet of assembly area if no fixed seats; plus one space per 250 square feet of office area |
| Free standing, cafes, restaurants and other establishments for the sale and consumption of food and beverage | Dining: one space per three (3) seats<br>Drinking bars, cocktail lounges: one space per two (2) seats |
| Cafes, restaurants and other establishments for area the sale and consumption of food and beverages when located within multi-use retail structures. | General: One space/250 sf of gross floor<br>all: One space / 250 sf of gross leasable |
| Hotels and Motels | One space per guest room and one per employee at maximum shift |
| Hospitals | One space per bed |
| INDUSTRIAL | |
| Research and Development | One space per 330 square feet of gross Floor area |
| "Van Court/Flextech" | One space per 330 square feet of gross floor area |
| Warehouses and Storage | One space per 1,000 square feet of the first Buildings 20,000 square feet of gross floor area, plus one space per 2,000 square feet of the second 20,000 square feet of gross floor area, plus one space per 4,000 square feet of the remaining square feet of gross floor area. |
| Manufacturing | One space per 600 square feet of gross floor area, or if the number of employees on the maximum work shift can be verified, one space per one employee on the maximum work shift |

3. Bicycle parking facilities shall be provided in separate convenient areas in accordance with the following table:

| Required Auto Spaces | Required Bicycle Spaces |
|---|---|
| 0-19 | 0 |
| 20-40 | 2 |
| Over 40 | 5% of required auto spaces |

The preceding shall require an initial installation of a maximum of 15 bicycle parking spaces adjustable to a maximum of 60 upon demonstrated need.

4. No loading area shall be located within twenty-five (25) feet of residential property.

5. Parcel entry areas should be clear, attractive, and inviting; circulation should direct day-to-day and visitor traffic clearly through the site, to main building entries and drop-off points, and to parking and service areas.

6. Full curb returns (as opposed to a standard driveway) shall be utilized for entries to all sites of over ten acres in size or for common driveways that serve two adjacent sites that together total more than ten acres.

7. Ganged driveways which serve two adjacent sites will be required to install landscaped islands along parking adjacent to the gang driveway and a landscape zone at the end of the common drive will act as a terminus to the view line down the ganged driveway (see Figure 4.11).

8. Within sites access drives shall provide adequate length to insure off-street vehicle stacking during times of peak use.

E. Building Architecture

1. The architectural style of new commercial and industrial buildings should have a contemporary appearance but utilizing elements, which complement the existing character of Tracy. This will mean relating to the relatively small scale of adjacent structures and incorporating such elements as variation in textures and materials in the design of elements facing the public street.

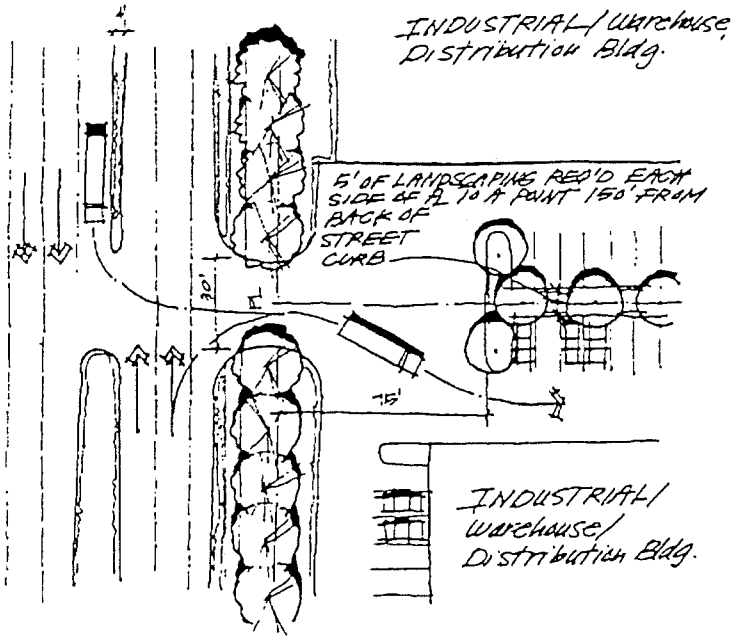


*Figure 4.11 - Typical Ganged Driveway*

2. Creative office and commercial building design and construction techniques shall be used to create structures with substantially equally attractive sides of high quality, rather than placing all emphasis on the front elevation of the structure and neglecting or downgrading the aesthetic appeal of the side elevations of the structure. Any accessory buildings and enclosures, whether attached or detached from the main building, shall be of similar compatible design and materials.

3. Large buildings should have facades that include variations in massing, form and texture. Continuous surface treatments of a single material should be minimized.

4. Building height limits set in Subparagraph C., Siting Requirements, may be exceeded by significant architectural features that do not exceed 15% of the building footprint area in plan. The purpose of these features shall be to strengthen the identity of development, to avoid a succession of "boxy" structures and to add diversity to the streetscape.

   These towers, skylights or other features shall be unoccupiable space and allowed only upon approval of building design review. This provision shall only apply on parcels of 3 or more acres in size.

5. Where a commercial or industrial area abuts a residential neighborhood, abrupt scale changes should not be allowed. The transition from residential to industrial should be gradual -- starting with smaller, less intensive uses near the residential with the largest and most intensive uses farthest from the residential.

F. Landscaping

1. Minimum landscaping requirements shall be as established by Off Street Parking Requirements, Section 10-2.2613 of the Tracy Municipal Code and as further elaborated below.

2. Landscaping and hard pedestrian surfacing is required in the 15 foot (minimum) setback zone specified between office buildings (or the office portion of a commercial or industrial building) and parking along street frontages. A minimum of forty percent of the zone shall be planted.

3. On-site landscaping along arterials between the property line and the building, parking lot or vehicular maneuvering or circulation improvements shall be installed by the property owner. These improvements shall

be designed as an extension of the adjacent public arterial landscaping. Upon acceptance by the City these improvements shall be maintained through the Lighting and Landscaping District.

4. Completion of landscaping on the site shall be simultaneous with completion of the building and other improvements on the site.

5. Landscaping shall not obstruct sight lines at street or driveway intersections.

6. A mixture of tree, shrubs and groundcovers is required in any landscape area. Toward this end at least one tree shall be provided for each 2,000 square feet of landscaped area between buildings and street property lines.

7. Reasonable access through landscaping shall be provided to public and private utility lines and easements for installation and repair.

8. Both perimeter and interior landscaping shall include canopy-type trees. The location and spacing of trees is dependent on the type of tree used, but the effect should be consistent tree cover, which will provide shade. The use of turf in the narrow planting islands is discouraged.

9. Tree placement must allow for sufficient root space adjacent paved areas and underground utilities. Tree wells and landscape strips in parking areas shall provide a minimum 4' wide planting dimension. Trees should be located 2 feet minimum away from curbs and walls.

10. The plant palette should be relatively limited and applied in groupings of similar species rather than a few plants of many different species planted together. Design planting to express an overall concept. Utilize plant materials in a logical, orderly manner to define spaces and to relate to buildings and structures.

11. Selecting planting to relate to the scale of the intended viewer. For example, in areas where the primary viewer is the person in the automobile, large trees should be selected to respond to the scale of the road and the speed of movement.

12. Selection of plant materials should be based on year-round beauty (deciduous color, spring flower, fruit, branching pattern) as well as form, texture, shape, and ultimate growth.

13. All street trees shall be deep-rooted, canopy-type trees suited to street conditions.

14. Use plant materials in a way that responds to the need for solar control. Deciduous trees should generally be used on southern and western exposures to screen summer sun and permit winter light.

15. Landscape amenities (walls, pots, etc.) should be incorporated into the design. Landscaping should accent building entries.

16. Landscaping shall be carefully located and species selected so as not to impede views of signage.

17. Bermed lawn areas shall not exceed 4:1 slope, and shrub areas shall not exceed 3:1 slope.

18. The use of water conserving plantings, such as California natives and drought tolerant trees, shrubs and turf is encouraged.

19. Live plant materials shall be used in all landscaped areas. The use of gravel, colored rock, bark and other similar materials are not acceptable as a sole groundcover material.

20. All trees shall be of 15 gallon minimum size at planting, with a minimum branching height 5 years after installation of 10' above road or parking surfaces and 6' at pedestrian areas. Shrubs shall be of 1 gallon minimum size with a maximum on-center spacing of 24". Likewise, groundcover may be planted from flats or 4-inch pots with a maximum spacing of 12" on-center.

21. Automatic irrigation is required for all landscaped areas. Plants should be watered and maintained on a regular basis. Irrigation systems should be designed so as not to overspray walks, buildings, and parking areas. The use of water conserving systems such as drip irrigation for shrub and tree planting is encouraged.

22. All undeveloped building pads should be seeded with perennial grasses prior to construction of the next phase of a project. All pads and site areas not leased for agriculture shall be mowed annually in the late spring, consistent with the City nuisance abatement program.

23. As specified by the *Off-Street Parking Requirements*, canopy trees shall be evenly distributed throughout the parking area so that 40 percent of the area shall be shaded at tree maturity. Trees are required at the rate of 1 tree per each 5 parking spaces.

24. Parking area landscaping shall be required at or above the following percentages, regardless of land use:

| Number of Parking Spaces Required | Percent of Parking Area in Landscaping |
|---|---|
| 1-15 | 5% |
| 16-30 | 10% |
| 31-60 | 15% |
| Over 60 | 20% |

Setback landscaping and exterior pedestrian hardscape areas may be counted in this 20% calculation.

25. Screening of parking areas from public rights-of-way and screening of undesirable site elements shall be in accordance with the provisions of the *Off-Street Parking Requirements*.

G. Signs

1. Signs must conform to the minimum requirements of Signs, Article 35 of the Tracy Municipal Code as modified herein.

2. A site sign program shall be integrated into a total design concept for a site and its buildings. The primary goal of the project sign system is to provide information and identification. Simple wording and graphic logos for identity of place are appropriate.

3. A sign may be illuminated provided that no flashing, traveling, animated or intermittent illumination shall be used. Such illumination shall be confined to the area of the sign except when such illumination is backlighting for an otherwise non-illuminated sign. No sign illumination shall cast a glare, which is visible from any street.

4. No building attached sign shall extend above the dominant roofline of the building.

5. All conduits, wiring, transformers, raceways and all fastening devices for sign, face, side, and exposed structures must be concealed from public area.

6. Signs shall be designed so as not to obstruct any pedestrian, bicyclist or driver's view of the street right-of-way.

7. The scale of signs, letters, and symbols should be appropriate to their use, whether to catch the eye of a passing motorists or strolling window shopper. An effort shall be made to reduce copy down to the minimum necessary to convey the message.

8. Color should be used carefully. Limited use of several colors with strong contrast between background and signage is recommended to make the signs easily readable. Too many colors reduce legibility and should be avoided.

9. Signs should be constructed with quality materials and in a craftsmanlike manner to ensure both an attractive appearance and a durable project.

10. All signs must be approved as a part of the Development Plan. A sign program shall be submitted as a part of this application. The sign area permitted for each site may be divided into the number of single or double faceted signs appropriate for the number and size of buildings located on a site.

The sign program should include:

i. Detached Business Identification Signs: One such monument sign (as defined by the Tracy Municipal Code) shall be allowed for each street frontage of a parcel. For commercial centers that have parcels, which utilize easements for their only access to the public right-of-way, monument signs may identify multiple tenants provided:

a. The aggregate total acreage of all parcels at the commercial center exceeds 35 acres, and

b. The commercial center is master planned as one development, and

c. The total floor area exceeds 300,000 square feet, and

d. The total number of monument signs for the commercial center is reduced by 50 percent, and

e. The monument signs are located at an entry driveway related to the access easement, and

f. All signage is contained in an approved master sign program.

These signs may only contain the symbol and/or name of the business and its street address. However, the commercial center may be identified on a maximum of one monument sign per arterial street frontage. The sign shall be free standing, may be double sided, and shall be set back a minimum of five feet from the public right-of-way. Sign area shall not exceed 32 square feet and shall not exceed six feet in height measured from the top of public street curb. Signs should generally be orientated perpendicular to approaching traffic.

ii. Wall Signs: On large, single tenant buildings signs should be located immediately above or adjacent to the primary building entrance or door of commercial establishment. The area of any single sign shall not exceed 100 square feet. Total area shall not exceed one-half square foot of sign per lineal foot of business being served.

On smaller, multi-tenant buildings signs should be located at the frontage of each individual lessee. The area of any single sign shall not exceed 100 square feet nor more than 75 percent of the tenant frontage. Capital letters shall be no more than 2.5 feet high and lower case letters no more than 1.5 feet in height. When individually-lettered wall signs comprise over 50 percent of the sign area of all sign types total sign area shall not exceed 1.2 square feet per lineal foot of business being served. When comprising less than 50 percent of the total sign area the maximum sign area shall be one half square foot per lineal foot of business being served.

iii. Directional Signs: Signs required or desired to assist patrons in accessing the facility shall be located insite parking areas. The design of such signs shall be simple and easily legible. There is no limit to the number of sign provided on a site however no single sign shall exceed 6 feet in area, except that vehicular "stop" signs shall be mounted per State standards.

iv. Each commercial center may have one freeway identification sign. The sign may identify any tenant(s) located within 350 feet of the freeway on any parcel within the center. Maximum height shall be 15 feet above crown of the nearest freeway, not to exceed 45 feet above finished site grade. Maximum sign area shall be 300 feet per sign face with a maximum of two sign faces.

11. Each commercial center may have one freeway identification sign. The sign may identify any tenant(s) located within 350 feet of the freeway on any parcel within the center. Maximum height shall be 15 feet above crown of the nearest freeway, not to exceed 45 feet above finished site grade. Maximum sign area shall be 300 feet per sign face with a maximum of two sign faces.

Each sign shall be designed to complement the architectural and landscape styles of the main building or buildings with respect to visual elements such as construction materials, color, or other design details. When more than one sign is permitted all signs shall be similar style, shape and materials.

12. The Auto Plaza as shown in Figure 3.1b of the I-205 Corridor Specific Plan may have one off-site Freeway Sign located (a) on the Park and Ride site (northeast corner of Grant Line Road and Naglee Road), (b) a shared Freeway Sign with the commercial development located on Parcel GL-7 or (c) within the defined Auto Plaza on Parcel GL-4 (Toyota). The Freeway Sign shall adhere to the following design criterial:

i. The maximum height shall be 15 feet above the crown of the nearest freeway, not to exceed 45 feet above the finished site grade.

ii. The sign shall only contain the name of the Auto Plaza and the name of each of the auto dealerships therein. The auto dealership names may be written in corporate colors and contain the corporate logo and the height shall be limited to the appropriate scale as it related to the sign dimensions.

iii. The sign shall be designed to complement the architectural and landscape styles on the I-205 Corridor area, with respect to visual elements such as construction material, color, or other design detail.

iv. The Auto Plaza Freeway Sign shall be perm,itted through the Conditional Use Permit process as defined in the Tracy Municipal Code Section 10.08.4250 et seq.

v. A shared Commercial development/Auto Plaza freeway sign shall contain the name of the comercial center and Auto Plaza. The major tenants (30,000 square feet of gross leasable space) and the auto dealerships may be written in corporate colors and contain the corporate logo, and the height shall be limited to the appropriate sacale as it relates to the sign dimensions.

H. Screening

1. All exterior trash and storage structures and service areas should be screened from public view with a wall or fence of a minimum height of 6 feet above the street curb level. Storage areas shall be set back a minimum of 50 feet from streets, unless fully enclosed in an architecturally compatible enclosure.

2. No storage areas are allowed within the landscape easements, front setbacks or side or rear yard landscaped buffers.

3. Utility company equipment and roof-mounted equipment shall be screened from street view.

4. The design of masonry walls, fencing, trash enclosures and similar accessory site elements should be compatible with the architecture of the building and should use similar materials.

5. Where masonry walls are used at property frontages, it should enhance the entrance to the property and should not impair traffic safety by obscuring views.

6. Adequate fencing and/or walls and landscaping shall be provided to guarantee reservation of privacy for adjacent residential uses. These areas shall be screened from noise, visual and lighting impact.

7. Long expanses of wall surfaces should be architecturally designed to prevent monotony.

8. Soundwalls used to buffer adjacent residential land uses shall be 8 feet in height.

I. Utilities

1. New and existing telephone, cable T.V. and electrical distribution lines of less than 35 KV must be placed underground.

2. Pad-mounted transformers, utility connections, and meter boxes shall be screened and integrated into the site plan.

3. Public utilities easements of 10 feet in width shall be dedicated adjacent to all street right of ways and elsewhere as determined necessary by the Director of Public Works.

J. Driveway & Intersection Standards

See Section 4.2.2. In addition, no driveway shall be located closer than 150 feet to the radius return point at intersection. Driveway width modifications may be approved with shared (ganged) driveways (see Figure 4.11). Driveway widths to be per City Standards.

### 4.1.2.3 Commercial Standards

A. Development Prototypes

As an aid to understanding the goals and requirements of development as applied to commercial land uses a series of examples or prototypes are presented in Figures 4.12 through 4.14. These Figures show both the possibilities and constraints proposed by the Plan and its associated standards.

B. Siting Requirements

1. Commercial buildings must be sited so as to create and enhance the streetscape. This can only be accomplished if all or a portion of the buildings are located near the street. In order to accomplish this in addition to the minimum setback requirements stated above a maximum building setback requirement is established for certain designated areas.

   In General Commercial (GC), Service Commercial (SC) and Freeway Commercial (FC) land use designations on sites of over 4 acres, at least one building must be located with a maximum setback from public right-of-way to building face of 50 feet. On corner sites adherence to this requirement is encouraged on both frontages, however only required on the major street frontage. The building located to this maximum setback must constitute at least 25 percent of the total building program for the site.

2. In Commercial Center (CC) and General Commercial (GC) areas parking shall not be permitted within 15 feet of the building entry face of any commercial structure. In the event the building has an arcade or other shade structure along this frontage this can be located within this required setback.

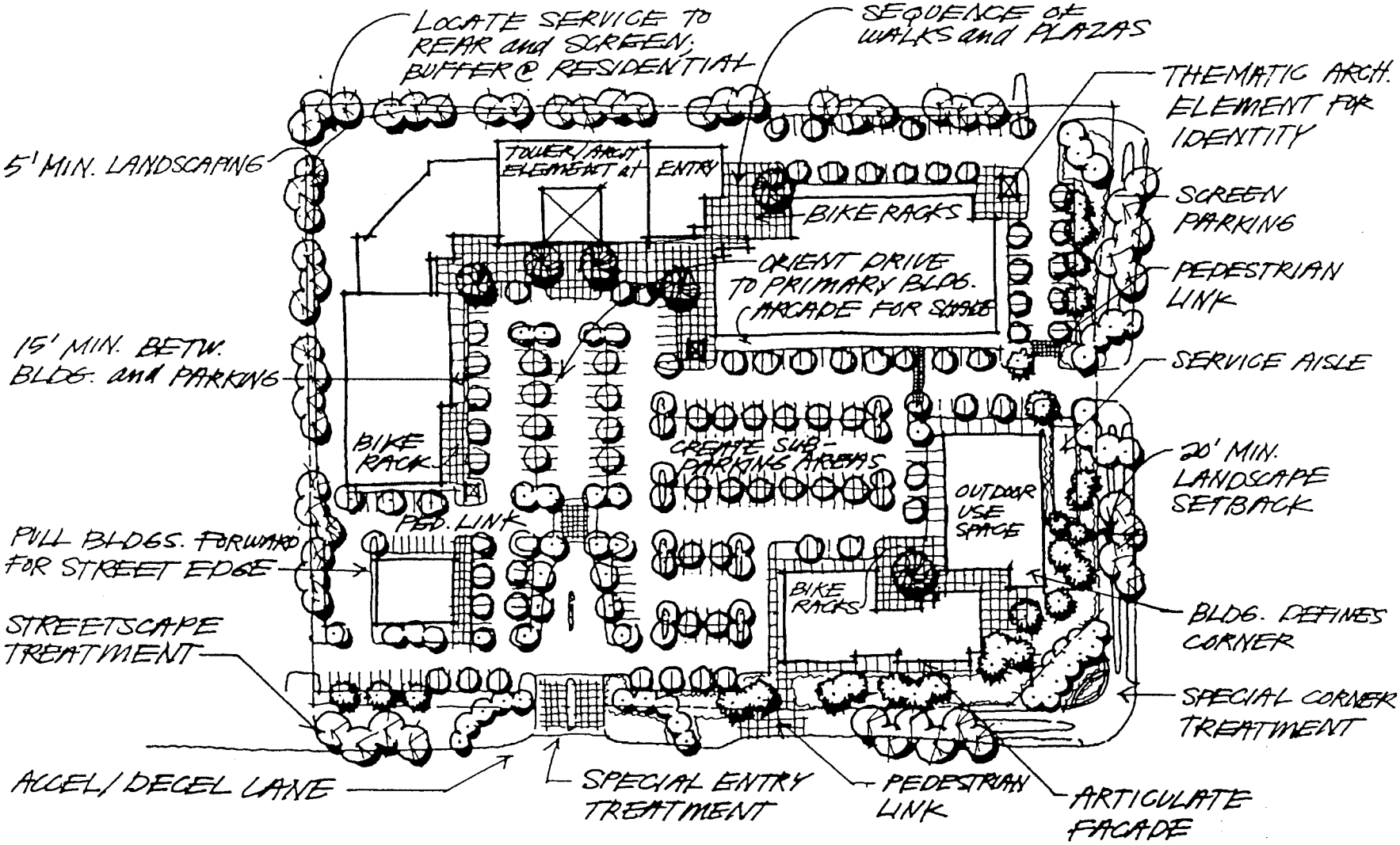


Figure 4.12 - Shopping Center Prototype I

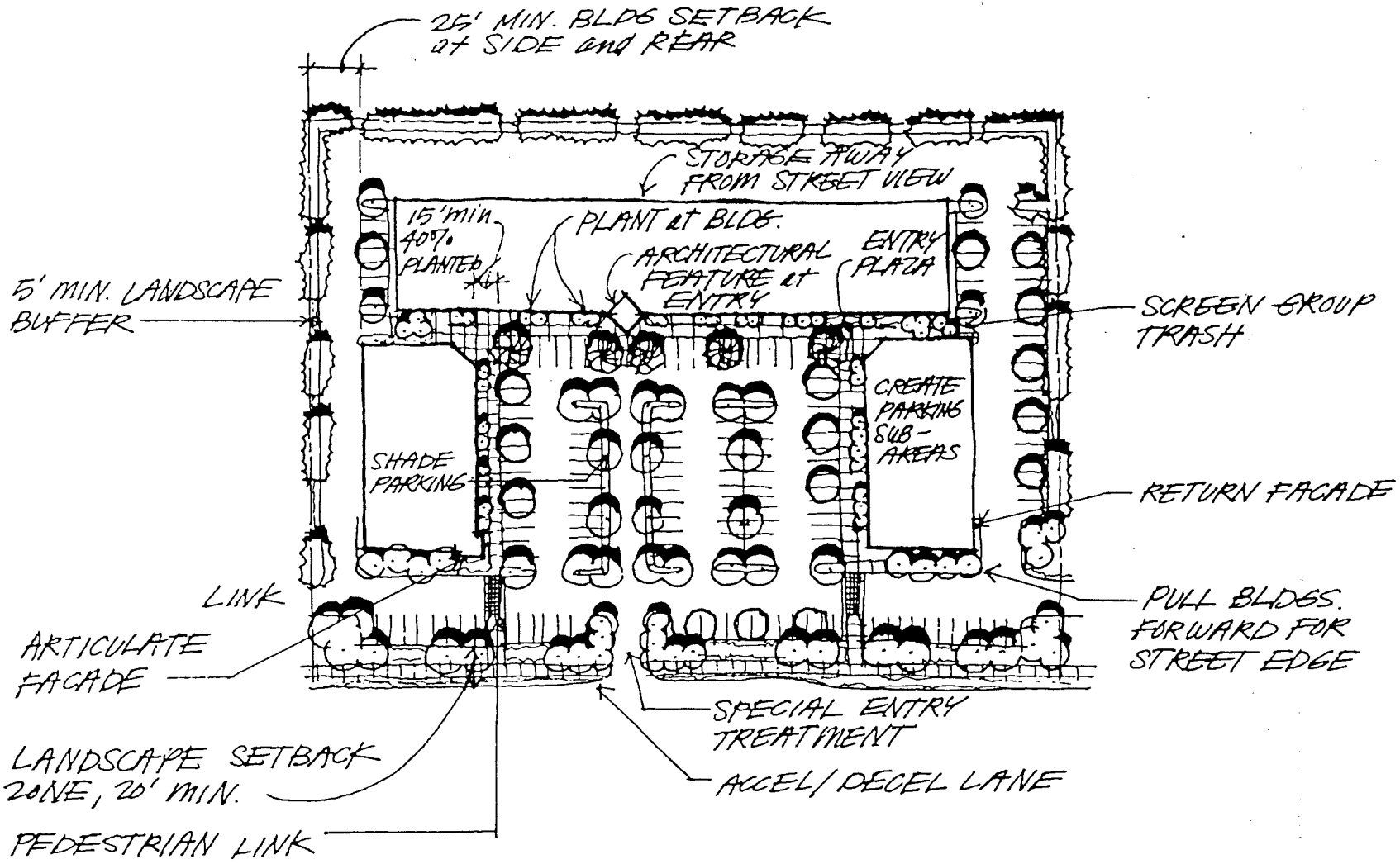


Figure 4.13 - Shopping Center Prototype II

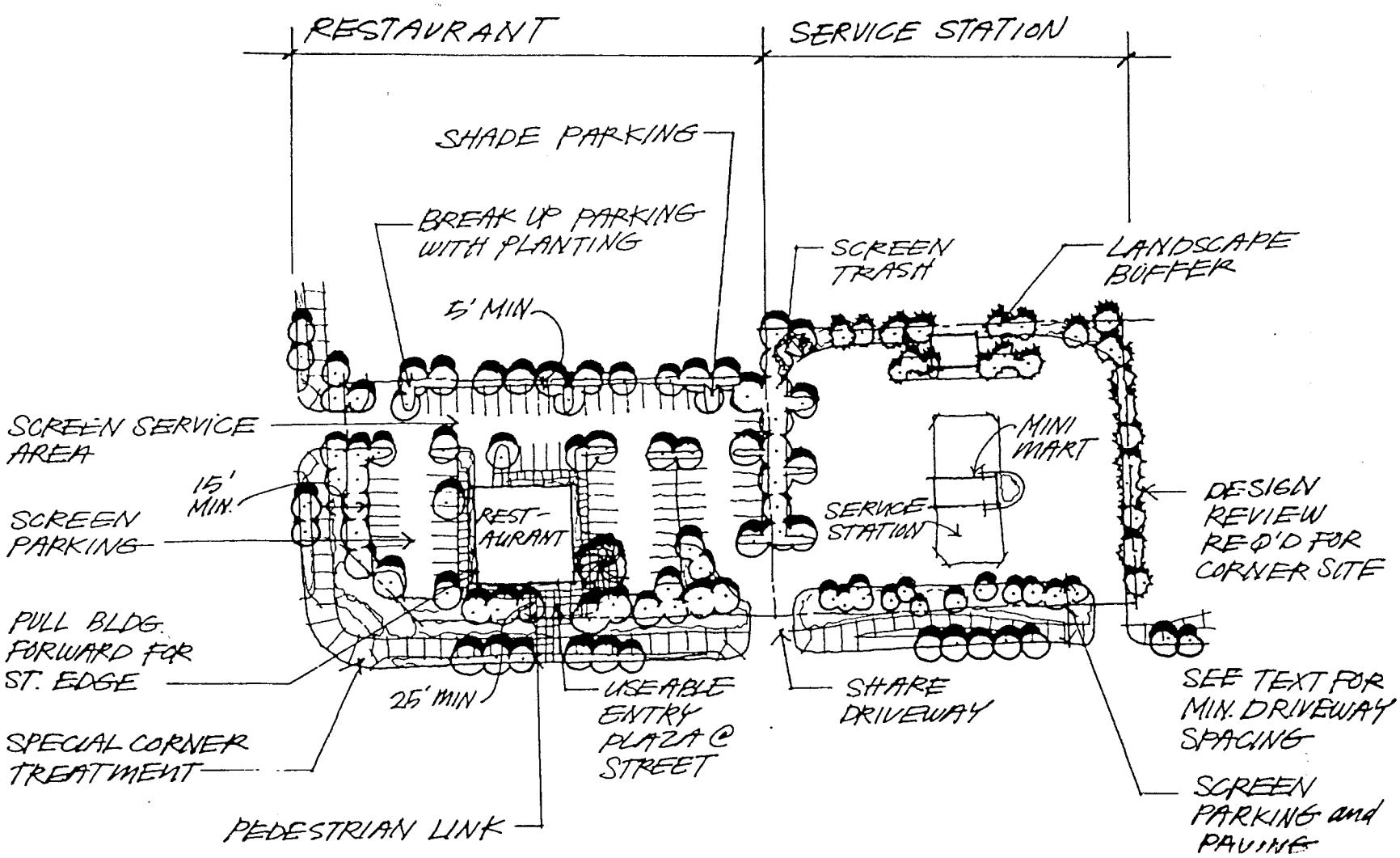


Figure 4.14 - Restaurant/Service Station Prototype

C. Parking and On-Site Vehicular Circulation

1. Vehicular entries to the site shall be well defined and recognizable to motorists. Improvements should include accent paving, signs, special plantings and lighting. Such improvements shall not block motorist's sight lines to oncoming traffic.

1. Truck loading areas and docks shall not be permitted between building(s) and the public street unless thoroughly screened from view.

D. On-Site Pedestrian Circulation

1. Within Commercial Center (CC), General Commercial (GC) and Freeway Commercial (FC) designated areas provision shall be made for building-to-street and site-to-site pedestrian circulation. Pedestrian routes shall be linked to the City-wide open space and bikeway circulation system.

2. Pedestrian areas should be provided at entries to buildings in the Commercial Center (CC), General Commercial (GC), and Service Commercial (SC) land use areas.

3. Pedestrian plazas, walkways and activity areas should be designed with paving materials and site furnishings, such as benches, trash receptacles and light fixtures that are of a pedestrian scale, compatible with design of the building and reinforce the concept of a total site design.

E. Building Architecture

1. Continuous arcades along the front of commercial buildings are encouraged as they provide the pedestrian protection from the weather, reduce solar gain and can serve to enhance the character of what might otherwise be simple, formless structures.
2. When more than one building is to be developed on a commercial site the buildings should be designed to relate to one another as a composition with a well thought out relationships one to another.

F. Landscaping

1. Utilize landscape materials to reinforce the design of entry features and pedestrian plaza areas.

2. Locate plant material to express an overall design concept. Organize these materials in a logical, orderly manner to define spaces and relate to buildings and site structures.

3. Consider the ultimate form, shape and character of plants when selecting plant materials.

#### 4.1.2.4 Commercial Center Design Guidelines

These guidelines translate the land use concepts and densities previously articulated into more specific and detailed instructions and requirements for the developers and staff to follow in implementing the design of the mall. General commercial and industrial standards as discussed in Section 4.1.2.2 apply to the commercial center zone, except as modified below.

A. Circulation System And Parking Area Design Guidelines

The design of the internal road system and parking areas should clearly define vehicular movement patterns. The design should allow users to easily orient themselves to their final destination.

1. Entry Roads

a. A designated entry road should be provided to accommodate pedestrian and bicycle traffic. Special paving materials should be used to identify areas where concentrations of pedestrian circulation cross the roads.

b. A median at this entry will simplify movement patterns and give the driver more opportunities to decide on his final destination.

c. Mall site entries should be designed to convey a "retail atmosphere" using special light standards, banners, signs, special paving and other devices to create a sense of arrival upon entering the site. The treatment of all entries should develop an overall project image. Entry roads should be planted with focal trees to create an image that is distinct from the ring road treatments. Trees and shrubs should be pulled back at the entries to create an inviting appearance, allow views into the center and to provide for adequate sight lines. Entries should be clearly signed and lighted.

2. Ring Roads

a Two major ring roads, an outer ring, and an inner ring road located at the edge of the building complex, should be utilized to unite the whole site. The inner ring road should be located directly adjacent the building edge and plaza areas. The ring roads should also be for circulation only and not be designed to accommodate any parking or parking back up functions. These ring roads should be a minimum of 28' in width.

b. The ring roads should be developed with a landscape treatment that distinguishes them from the parking area and major entries. Columnar tree forms, which can be perceived from a distance, will assist in clarifying the circulation hierarchy. Cluster tree plantings along perimeter loop road to allow views into project.

c. Bus or van drop-off should be provided along the inner ring road. This drop-off should relate directly to a major building entry. Use of ring road for service loading should be minimized.

d. Typically maintain a 15 foot wide landscape strip, with a 10 foot minimum, along the outer ring road.

3. Parking Areas

a. The parking areas may be broken into smaller sub-areas by medians of landscaping. These sub-areas should each relate to a single major building entry with parking aisles oriented perpendicular to major building entries.

b. Use compact car stalls to gain the space for landscape islands in parking lot.

4. Parking Area Landscape

a. Provide minimum of 1 tree per 5 stalls in parking area. Cluster trees in parking areas in landscape islands and individual tree cut outs to create a more hospitable environment for the trees and to allow for orienting views of major entries.

b. Medians along entry roads should be a minimum of 7' wide to keep trunks 30" away from curb. Plant groupings of 24 inch tall shrub mass in medians to screen views of cars from ring road.

c. Avoid placing large trees in islands directly across from major building entries. Instead carry landscape treatment across road into parking area, while allowing views to entry.

d. Plant parking areas with canopy trees distinct from ring road and entry road treatments.

B. Architectural Design

The key elements to the design of the regional shopping mall are the building massing, form and composition, store fronts, materials, colors and finishes.

1. Building Massing, Form, and Composition

a. The important design criteria for shopping malls is unity among all primary and accessory uses that develop there. An architectural program should be presented that utilizes similar and contrasting design elements as part of a well-conceived overall concept.

b. Large scale building complexes such as malls and other retail centers provide opportunities to create bold architectural and landscaping designs, which result in providing major amenities to the public. Where appropriate these buildings shall use large scale and bold forms at the outside of their main entrances in combination with such features as plazas, gardens, water features and public art, in order to humanize the mall entrances.

c. Inside any enclosed malls, at appropriate places, such features as garden planters, siting and resting areas, public display and art galleries and fountains shall be located.

d. Building massing and height will determine the overall presence and identity of the Tracy Mall. The majority of the structure is likely to be one story in height. A uniform height will serve to strengthen the identity of the Mall and establish a consistent frontage appearance.

e. Design mall architecture primarily to draw pedestrians into the interior space of the mall, inviting walking and shopping. The style of the architecture should evolve from consistent and carefully-proportioned use and interpretation of a vocabulary of architectural elements including interesting roof volumes.

f. Although variety is important, care must be taken to avoid confusion of forms and the extremes of over-ornamentation or over-simplification. A careful balance of all design ingredients must be maintained. A variety of related architectural forms is encouraged.

g. The Tracy Mall should not become a theme center consisting of one type of architectural form. Use of one style of form will quickly become dated and lose its excitement. Articulated, simple, timeless design is encouraged.

h. Architectural forms should define and emphasize mall entrance over individual store entrances; that is, a hierarchy of entrances should be established.

2. Store Fronts of Anchor Tenants and Mall

a. The design of the storefronts should allow variation of appearance without resulting in a confusion of effects or a lack of continuity. The individual storeowner can have freedom of design working within an architectural framework without jeopardizing the overall character of the Mall.

b. Main mall entry elevation and anchor elevations are encouraged to have detailed elements and visual interest, such as pedestrian, signing, or landscaping.

c. The uses of overhangs, or arcades on building facades are encouraged to provide added color, weather protection and opportunities for signing.

d. Avoid designing blank monolithic facades - all visible sides of a building should provide a desirable appearance.

3. Materials

a. All materials should be appropriate for their location considering the amount of physical contact, visual exposure and viewing distance. Colors should be generally light to medium intensity. Primary colors shall be reserved exclusively for graphics. Glossy finishes and visually confusing patterns and combinations should be avoided.

b. Color schemes, which respond to the style of the structure and respected the adjacent buildings shall be developed for each building. Accent materials such as tile bases should be carefully chosen to complement the building style and coordinate with adjacent buildings.

4. Screening

a. Mechanical equipment should be reasonably screened from view by elements compatible with building design and visually integrated with building architecture.

C. Signs

1. The primary purposes of signs are to identify uses and offer public information. The design of outdoor signing is a critical element in the overall appearance of a project. Signs should be designed with the purpose of identifying uses and adding accent to the visual quality of the building. A well-designed sign program shall be adopted to tightly control the use of all signs.

2. As stated earlier in this Specific Plan, the purpose of a well designed sign program is to provide a continuity of design which will contribute to an integrated, well planned, well designed, high quality commercial retail environment. A sign program will tightly control the use, size, and location of all signing within a commercial complex. General guidelines are that signs be limited in use, be located on the facades of buildings or be freestanding, ground supported, pedestal signs. Not all commercial properties will allow freestanding pedestal signs, only major complexes and only for the purpose of identifying the location of such complexes. Old fashioned, freeway located, pole signs and/or pylon signs of great height are not desired. Special freeway oriented signs may be considered if designed a part of a landscaped, sculptured, building entrance, or open space feature when properly integrated into the remainder of the building complex architecture.

3. One large mall identification sign and one theater marquee sign shall be allowed. Said signs may only contain the name of the mall developments and the name of eight major tenants, as defined as those occupying 30,000 square fee or more of gross leasable area. The tenant names may be written in corporate colors and the height shall be limited to the appropriate scale as it relates to the sign dimensions. The size, location, and height shall be approved in the final development plans of the mall PUD Zoning.

4. In the mall complex, only major tenants shall have signs to be seen from the outside. Major mall tenants are designed as those occupying 30,000 or more of the gross leasable area. Smaller, mall corridors oriented tenants shall only have signs seen from inside the mall corridors. Mall tenants containing less than 30,000 square feet of gross leasable area and only having exterior entrances may have one (1) identification sign over the entrance. Height of the letter size shall not exceed eighteen inches (18").

5. Major mall tenants shall be allowed one wall mounted sign per face of building. The maximum number of signs shall be three with the individual and total sign area as approved in the Development Plan process.

6. Sign materials shall reflect a high-quality character; concrete, fiberglass, tile, metal, glass fiber reinforced concrete are preferred. Imaginative designs, which depart from traditional methods and placement of signage, are encouraged.

D. Exterior Pedestrian Space Guidelines

The exterior pedestrian environment provides the first impression for shoppers entering the Tracy Mall and is also the location of much public information. Special design consideration should be given to enhancing a shoppers first impression of the mall.

1. Mall and Anchor Tenant Entries

   a. Mall and anchor store spaces shall allow for the creation of a attractive space for outdoor pedestrian uses. Elements such as building recesses, projections, arcades, and towers are among appropriate forms of architectural definition of mall entrances. Mall entry designs shall integrate well with the remaining mall structure architecture.

b. Encourage location of restaurants or other uses, which will benefit from an outdoor relationship at major entry to mall. Create special outdoor areas, which reflect the bright, active social character of interior mall development.

c. Provide a highly visible focal element centrally located at entries; integrated into pedestrian flow.

d. Allow outdoor food stands, flower stalls, and other vendor's modest sized vendors to utilize and enhance the flavor and attractiveness of mall entrances.

e. Locate and design entry area uses to respond to climatic patterns. Trees shall be used to extend the outdoor use time by providing relief from the sun and softening extensive areas of building and paving.

f. Visual richness shall be created through the use of special plantings, flowering trees, annuals, and a variety of furniture elements such as bollards, benches, pots, and trash receptacles. Special urban landscape details such as special paving, tree grates, tree guards, and carefully controlled lighting, shall also be used to add visual richness.

2. Perimeter Walkways

a. Perimeter pedestrian collector walk at building edge should be 10 to 15 feet wide at all entrances, 5 feet at all other areas.

b. A minimum of 10' of landscaped area should be provided at building perimeter, excluding entries and truck dock areas.

E. Lighting Guidelines

1. Mall outdoor lighting should serve functional, safety, and aesthetic purposes. Lighting should create an on-site ambience. An abundance of high-quality outdoor lighting is encouraged to give the Mall vitality and sparkle at night.

2. Lighting fixtures, functional only at night, are also viewed during the day, and therefore, must be integrated onto the street furniture planning. The selection of special light fixtures for the Mall will add to an area's overall visual

image and identify it as separate from other developments in Tracy. Therefore, lighting throughout the Mall should be compatible in style, fixture color, and lamp color.

3. Night lighting of buildings should be done in a selective fashion and shall be indirect in character with no light source visible. The following formats are among the acceptable means of architectural lighting:

- Keynote special features.
- Emphasizing repetitive elements such as columns.
- Using light to articulate architectural composition, such as spotlighting vertical elements of a vertical building.

4. Light standard heights should be related to the lighting need of the use:

- Parking and road: 35-50 feet high
- Pedestrian areas: 10-15 feet high
- Planting areas: uplights or lowlights, 3 feet height.

5. Light fixtures shall only reflect light directly to the ground. No light shall be visible from the side or top of the fixture. Use of low energy usage fixtures is encouraged.

### 4.1.2.5 Industrial Standards

A. Development Prototype

As an aid to understanding the goals and requirements of development as applied to industrial land uses an example or prototype is presented in Figure 4.15 and 4.16. This Figure shows both the possibilities and constraints proposed by the Plan and its associated standards.

B. Environmental Standards

1. Use Restrictions

No use shall be permitted to exist or operate on any lot which:

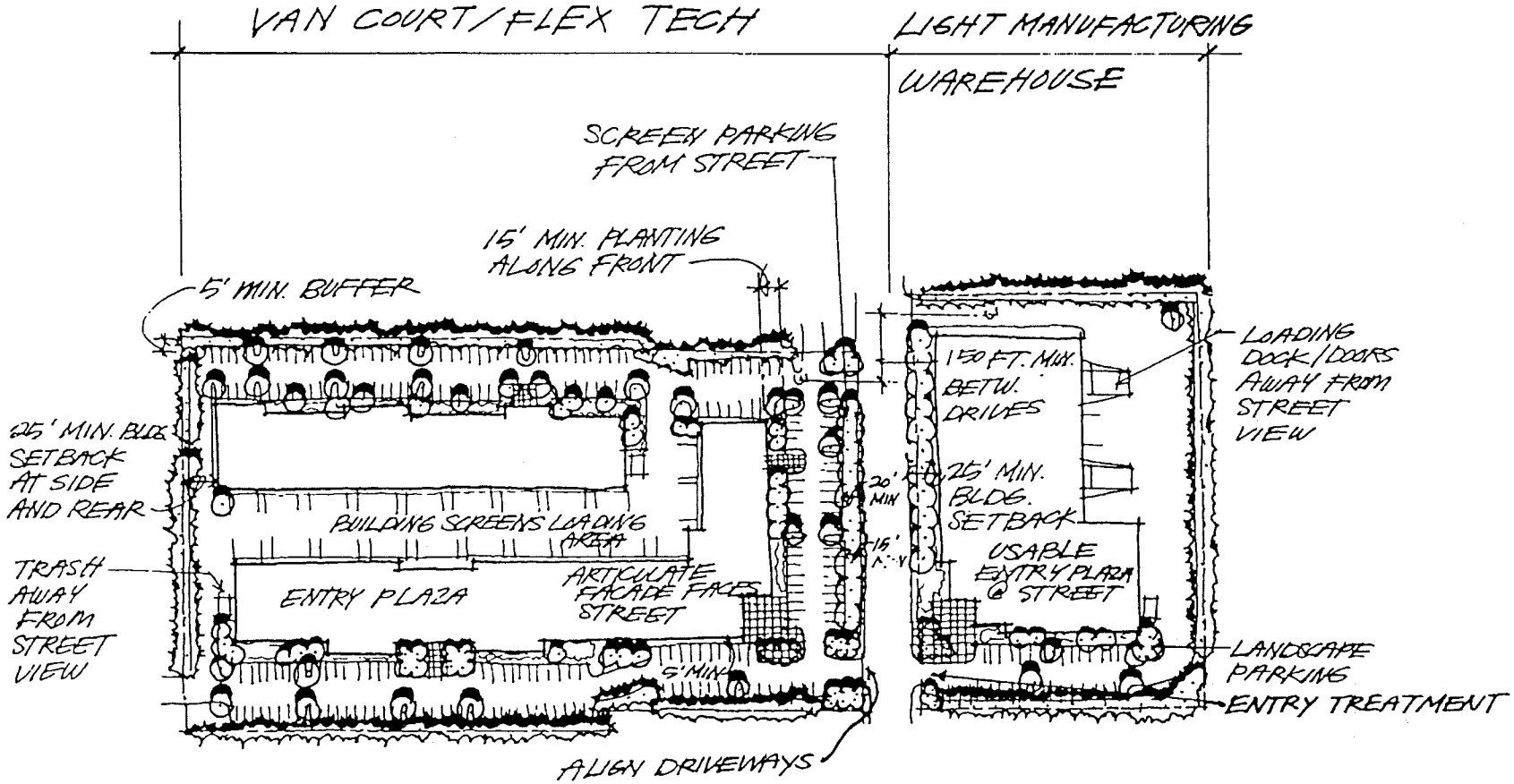


*Figure 4.15 - Light Manufacturing/Warehouse and Van Court/Flex Tech Prototypes*

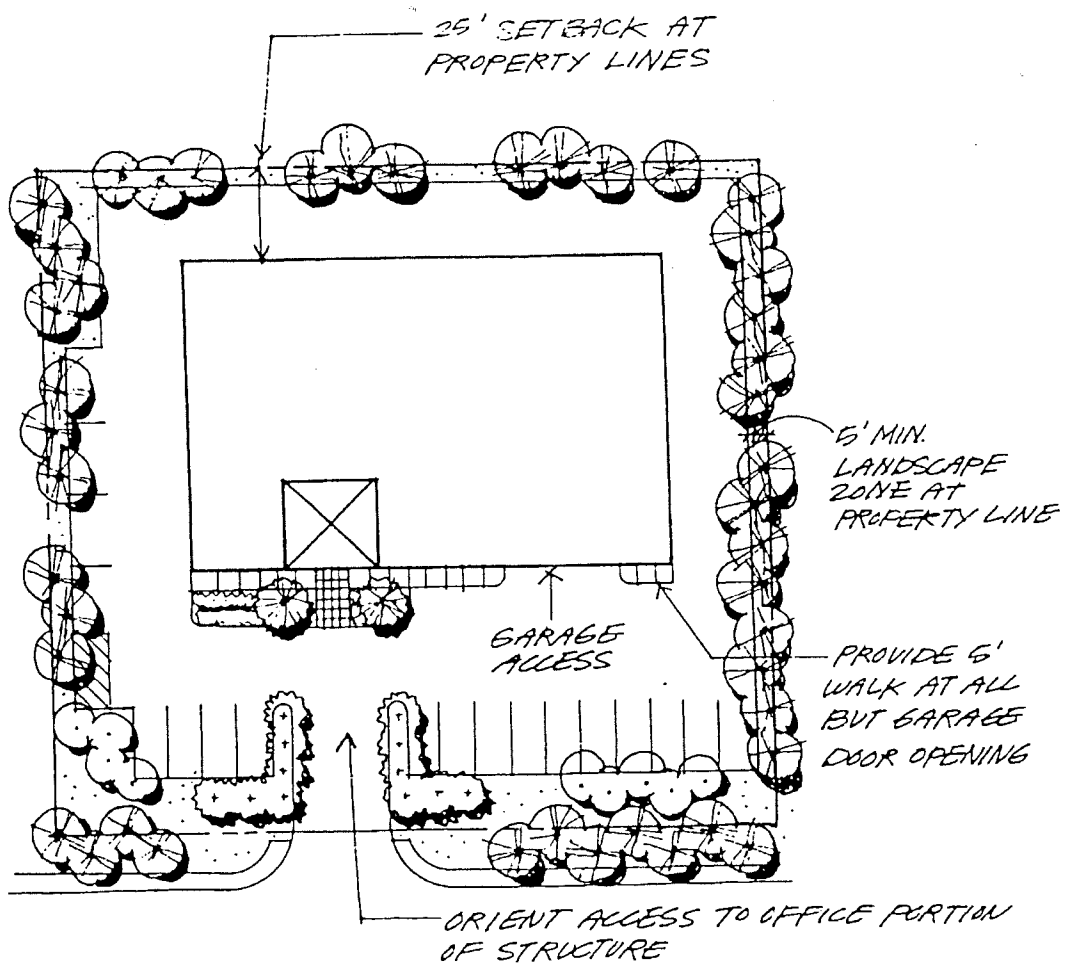


## LEGEND

**Applicable Development Districts**

Service Commercial
Light Industrial

**Land Use Data**

| | |
|---|---|
| Site: | 33,000 SF |
| Building: | 10,000 SF |
| F.A.R.: | 0.30 |
| Parking Ratio: | 1/600 SF |
| 18 Spaces | |

Percent Landscaping: 17% shown
10% minimum
Parking Lot Trees: 4 required at 1 tree/5 spaces

City of Tracy

David L. Gates & Associates
The Sward Company

*Figure 4.16 - Auto Service Prototype*

a. Emits dust, sweepings, dirt, cinders, fumes, odors, radiation, gases and vapors, or discharges liquid or solid wastes or other harmful matter into the atmosphere or any body of water which may, according to the appropriate agency, adversely affect:

(i) the health and safety of persons within the area, or
(ii) the health and safety of persons in adjacent areas, or
(iii) the use of adjacent properties

b. Discharges waste or any harmful substance as defined by the Municipal Code, into any public sewer or storm drainage system.

c. Produces intense glare or heat, unless such use is performed only within an enclosed or screened area, and then only in such manner that glare or heat emitted will not be discernable from any exterior lot line.

d. Creates a sound pressure level in violation of any regulation of any public body having jurisdiction. This requirement shall also be applicable to the disposal of trash and waste materials.

e. Allows the visible emissions of smoke (outside any building) other than the exhausts emitted by motor vehicles or other transportation facilities or any emissions in violation of any regulation of any public body having jurisdiction. This requirement shall also be applicable to the disposal of trash and waste materials.

f. Creates a ground vibration that is perceptible, without instruments, at any point along any of the exterior lot lines.

2. <u>Hazardous Wastes and Water Pollutants</u>

a. An on-site reconnaissance for hazardous wastes must be conducted for each parcel within the study area and the resulting report submitted with the application for the first proposed Tentative Map. If hazardous wastes are identified they must be dealt with to the satisfaction of the Tracy Municipal Code, before the application may be approved.

b. All new industries locating with the Specific Plan areas will be required to obtain a Discharge Permit from the Director of Utilities prior to occupancy. This permit shall establish the amount and quality of wastes allowed to be discharged into the City's sanitary sewer.

c. The quality of wastewater entering the city sewage system from proposed uses shall be measured by the Biochemical Oxygen Demand (BOD) and Total Suspended Solids (TSS) levels referenced in the local Water Quality Control Board 208 Plan. Users that are not expected to comply with these standards will be required to provide on-site pretreatment facilities.

d. The storage and distribution of hazardous materials shall be subject to the rules of the San Joaquin County Health District.

e. Industries regularly using significant quantities of hazardous chemicals as defined by State Law in the course of their operations shall be required to obtain a Conditional Use Permit.

C. Siting Requirements

1. On industrial or warehouse and distribution sites the 5 foot landscaped setback from internal property lines shall only apply on the property lines perpendicular to the street frontage. The landscaped buffers on these property lines are required to a point 150 feet onto the parcel from the street right-of-way.

D. Parking and On-Site Vehicular Circulation

1. Truck loading areas and docks shall not be permitted between building(s) and the street unless the building(s) are set back from the curb a minimum of 125 feet and doors are screened by landscaping, berms and/or fences.

E. Building Architecture

1. Metal buildings shall only be allowed where the industrial nature of the use seems to mandate this type of construction. If metal buildings are found appropriate surface treatment to the office portion of such structure facing the public street shall be required.

F. Landscaping

In Limited Industrial (LI) areas (for all land uses other than Office and "Van Court/Flextech") parking lot landscaping requirements may be reduced as specified in the Tracy Off-Street Parking Requirements referenced above. These provisions allow the reduction of 50 percent of the required landscaping based on the providing of the 15 foot landscape setback along the street frontage required by this document. The 15 foot strip may be included in the calculation of the total parking lot landscaping requirement. The remainder of the landscaping requirement must be distributed over the lot(s) to provide shade.

### 4.1.3 Public Facilities Standards

Fire services will be provided from the new station to be located at Corral Hollow Road and Lowell Avenue.

No new police or governmental service structures are planned within the boundaries of this Specific Plan. In a manner like that described above for the Fire Department the plan does however provide a contribution to necessary Police and general governmental department expansions. These contributions consist of funds for the expansion of Police Department headquarters and expansion of the physical plant of Public Works, Community Development, Parks and Recreation and other departments to meet the additional demands of future Specific Plan residents and businessmen for staff and programs.

### 4.1.4 Public Schools

No residential growth allocations shall be approved unless and until the developer and/or property owner has evidenced compliance with the Comprehensive School Facilities Capital Improvement and Finance Plan (hereinafter Plan) adopted by the affected school districts. The Property Owner shall be required to consent to the formation of a community facilities district pursuant to the provisions of the Mello-Roos Community Facilities Act of 1982 requiring a special tax at building permit or later (i.e. close of escrow). Evidence of compliance with the Plan shall be shown by the formation of a Community Facilities District (CFD) unless the City receives written confirmation from the District(s) that alternative voluntary arrangements have been made to mitigate the impacts to school facilities as required by the District and the City.

## 4.2 Circulation

### 4.2.1 Roadway Standards

The Specific Plan circulation system has been designed to meet the transportation demands of the projected commercial/industrial areas and residential population, as well as to link with the city's existing roadway network.

Streets within the Planning Areas are classified according to their expected level of use in the following categories:

| Category | Cross Section | Average Daily Traffic |
|---|---|---|
| Major Arterial - 6-lanes | 92' - 104' Traveled Way (incl. 16' median/left turn lane) | >25,000 |
| Major Arterial - 4-lanes | 64' - 80' Traveled Way (incl. 16' median/left turn lane) | 10,000 - 25,000 |
| Minor Arterial - 4-lanes | 64' - 66' Traveled Way (incl. 14' left turn lane 2-way) | 5,000 - 12,000 |
| Major Collector - 2-lanes | 56' Traveled Way (incl. 16' median/left turn lane) | 2,000 - 5,000 |
| Minor Collector - 2-lanes | 40' - 44' Traveled Way | 500 - 2,000 |

Guildlines are presented in greater detail in Figures 4.17 through 4.33.

### 4.2.2 Driveway and Intersection Standards

1. Major Collectors and Minor Arterials should have no driveways serving single family homes. Each single-family subdivision shall have a main entrance. Driveways serving multi-family buildings, commercial and institutional buildings are allowed.

2. Major Arterial Streets may have commercial or institutional driveways, but these should be carefully located so as not to impede the primary function of these streets, which is to carry through traffic. In general, parcels with frontage on major arterials should have their access on side streets if possible. If a parcel's only

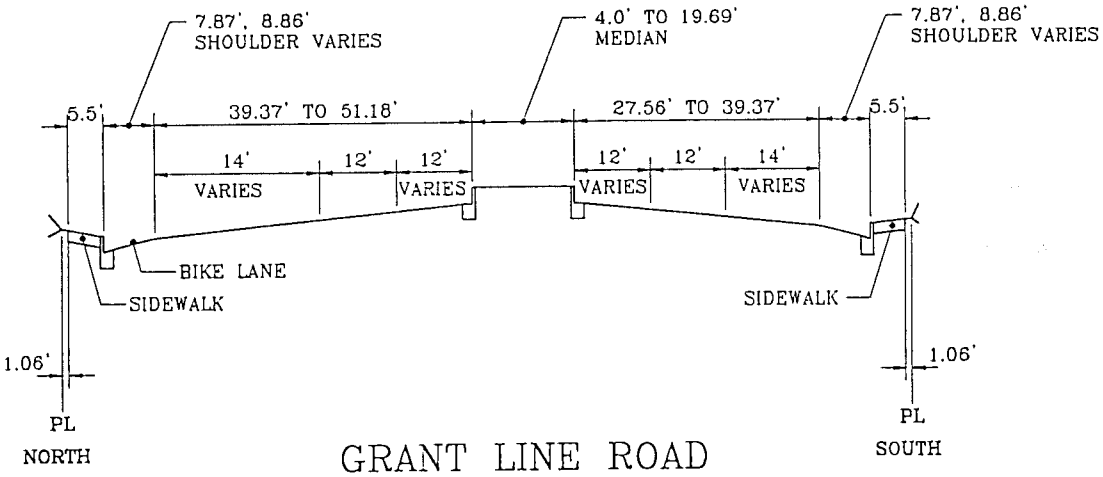


GRANT LINE ROAD
NAGLEE ROAD TO I-205
FIGURE 4.17c

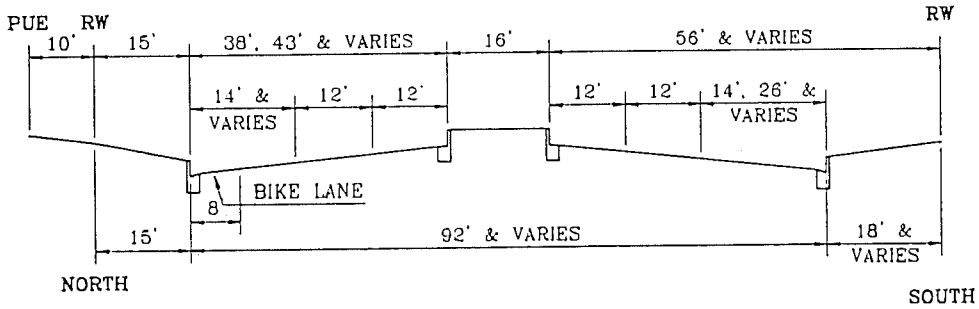


GRANT LINE ROAD
STREET "A" to NAGLEE ROAD
FIGURE 4.17b

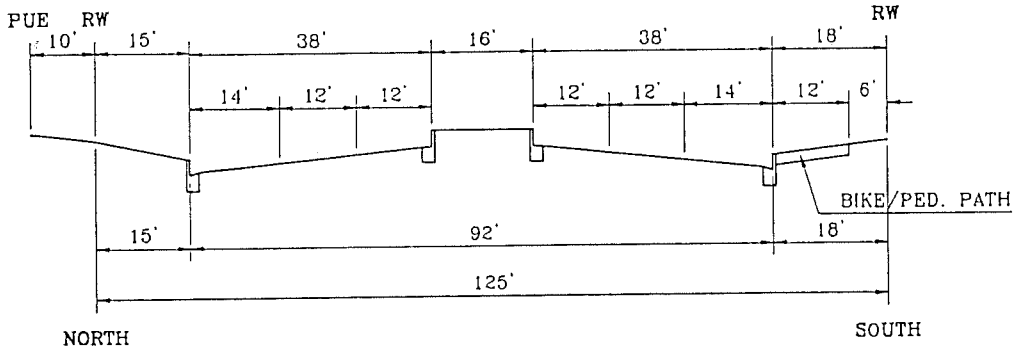


GRANT LINE ROAD
LAMMERS ROAD TO STREET "A"
FIGURE 4.17a

| JOB NUMBER: COT012 | ROAD CROSS SECTIONS<br>GRANT LINE PLANNING AREA<br>I-205 CORRIDOR SPECIFIC PLAN AMENDMENT<br>CITY OF TRACY CALIFORNIA | Ruark and Associates<br>Consulting Engineers | FIGURE 4.17 |
|---|---|---|---|

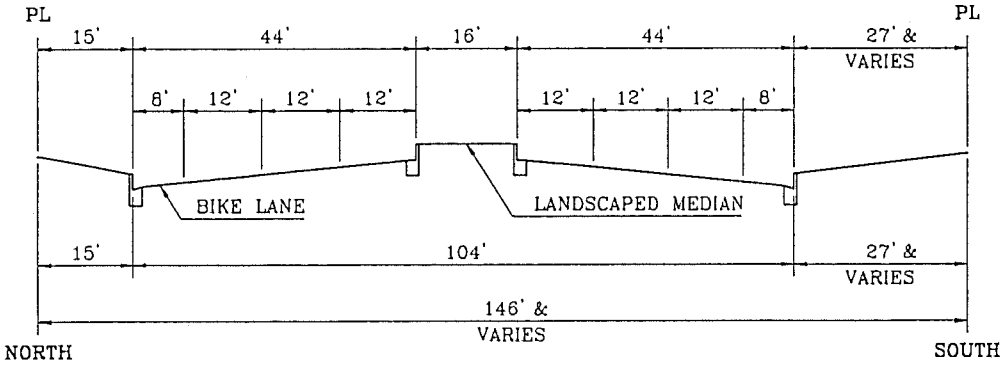


GRANT LINE ROAD
I-205 TO CORRAL HOLLOW ROAD

FIGURE 4.18b

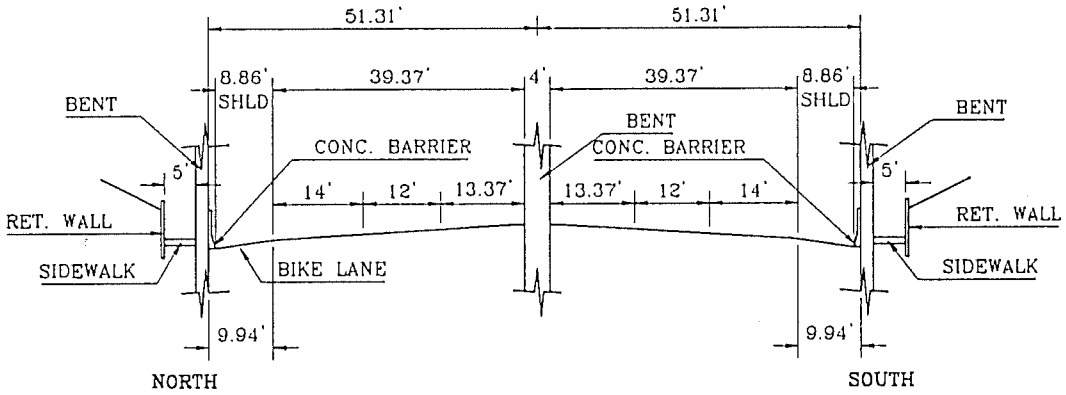


GRANT LINE ROAD
BELOW I-205

FIGURE 4.18a

| JOB NUMBER: COT012 | ROAD CROSS SECTIONS<br>GRANT LINE PLANNING AREA<br>I-205 CORRIDOR SPECIFIC PLAN AMENDMENT<br>CITY OF TRACY CALIFORNIA | Ruark and Associates<br>Consulting Engineers | FIGURE 4.18 |
|---|---|---|---|

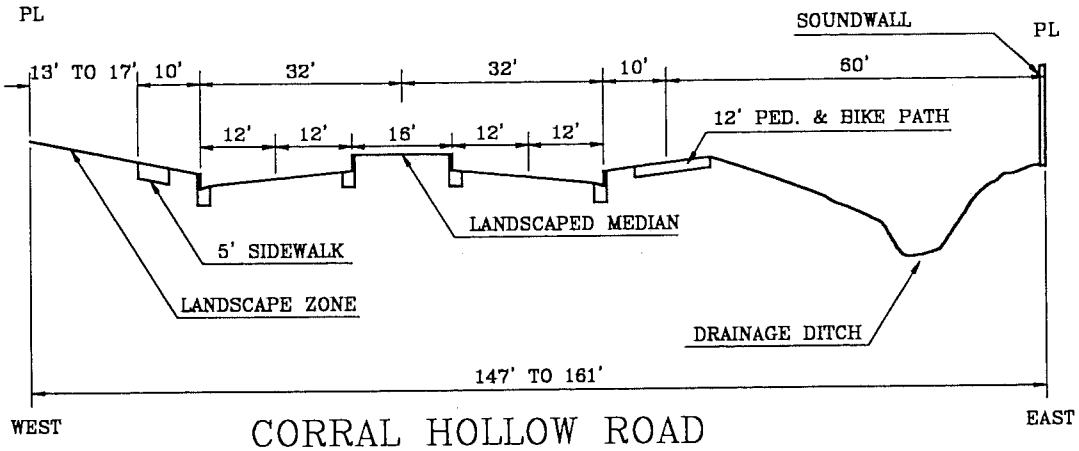


CORRAL HOLLOW ROAD
GRANT LINE ROAD TO I-205
FIGURE 4.20

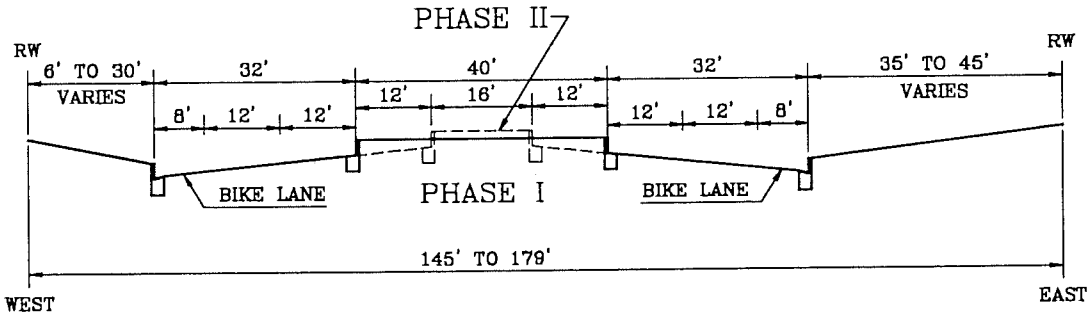


CORRAL HOLLOW ROAD
LOWELL TO GRANT LINE ROAD
FIGURE 4.19b

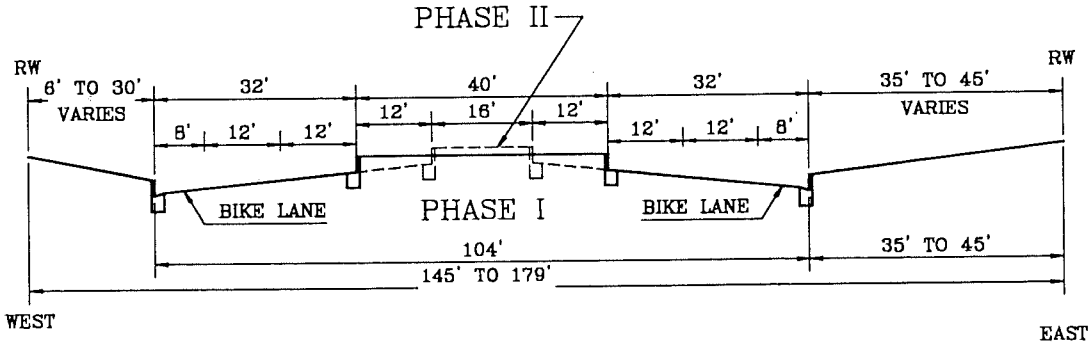


CORRAL HOLLOW ROAD
BYRON TO LOWELL
FIGURE 4.19a

| JOB NUMBER: COT012 | ROAD CROSS SECTIONS<br>GRANT LINE PLANNING AREA<br>I-205 CORRIDOR SPECIFIC PLAN AMENDMENT<br>CITY OF TRACY CALIFORNIA | Ruark and Associates Consulting Engineers | FIGURE 4.19 & 4.20 |
|---|---|---|---|

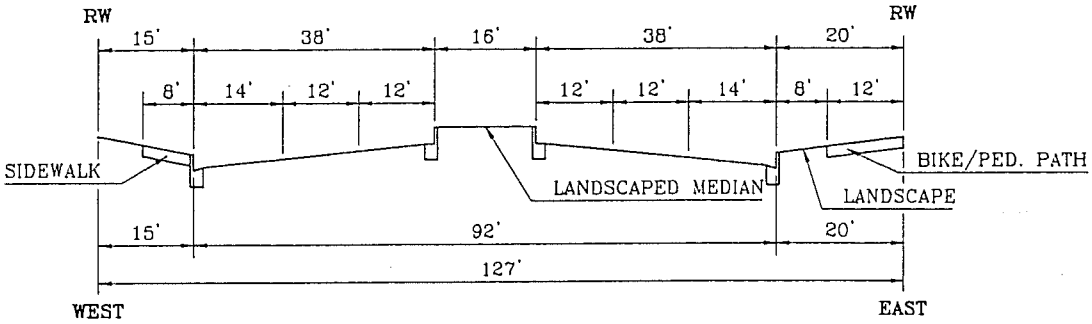


NAGLEE ROAD
GRANT LINE ROAD TO MALL ENTRY #3
FIGURE 4.22

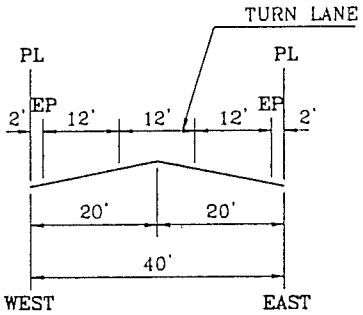


CORRAL HOLLOW ROAD
I-205 TO MALL ENTRY #4
FIGURE 4.21b

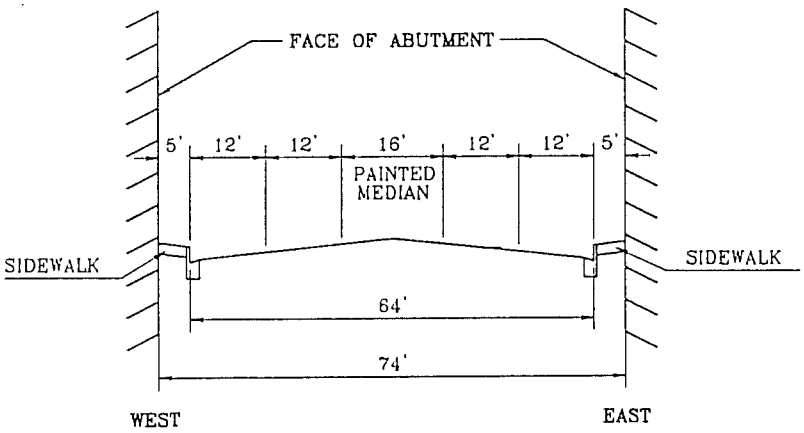


CORRAL HOLLOW ROAD
BELOW I-205
FIGURE 4.21a

| JOB NUMBER: COT012 | ROAD CROSS SECTIONS<br>GRANT LINE PLANNING AREA<br>I-205 CORRIDOR SPECIFIC PLAN AMENDMENT<br>CITY OF TRACY CALIFORNIA | Ruark and Associates<br>Consulting Engineers | FIGURE 4.21 & 4.22 |
|---|---|---|---|

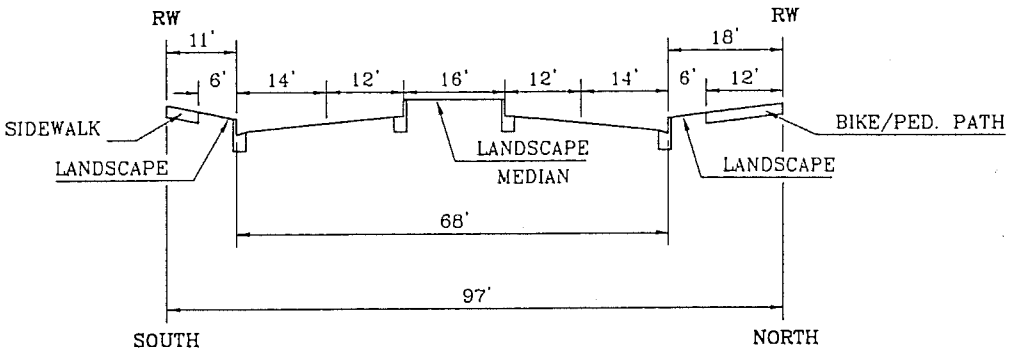


STREET "B"
NAGLEE ROAD TO STREET "A"
FIGURE 4.24

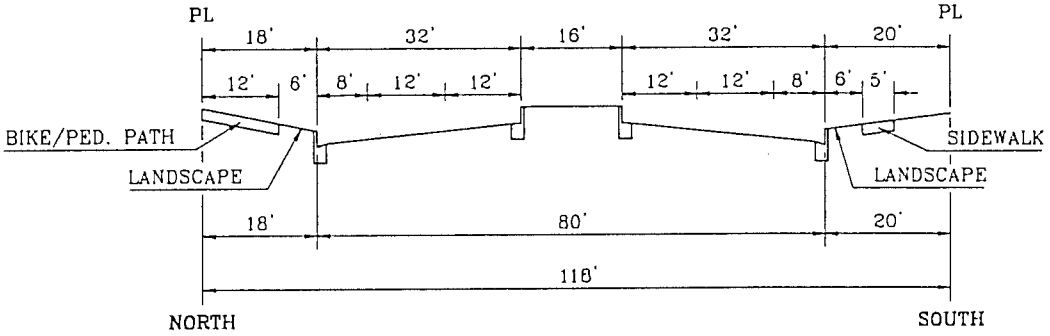


STREET "C"
NAGLEE TO CORRAL HOLLOW
FIGURE 4.23b

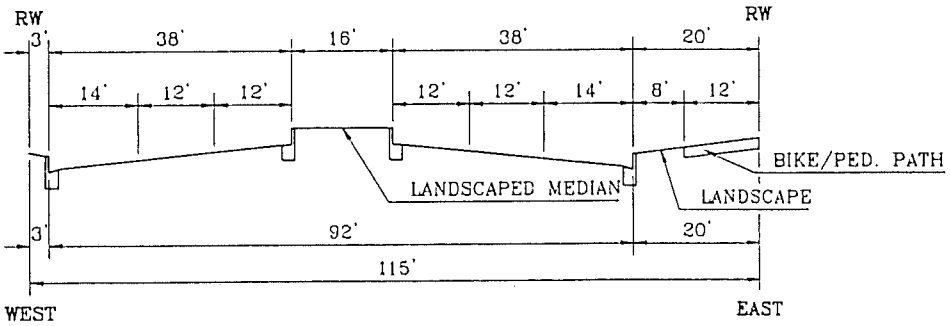


NAGLEE ROAD
MALL ENTRY #3 TO STREET "C"
FIGURE 4.23a

| JOB NUMBER: COT012 | ROAD CROSS SECTIONS<br>GRANT LINE PLANNING AREA<br>I-205 CORRIDOR SPECIFIC PLAN AMENDMENT<br>CITY OF TRACY CALIFORNIA | Ruark and Associates<br>Consulting Engineers | FIGURE 4.23 & 4.24 |
|---|---|---|---|

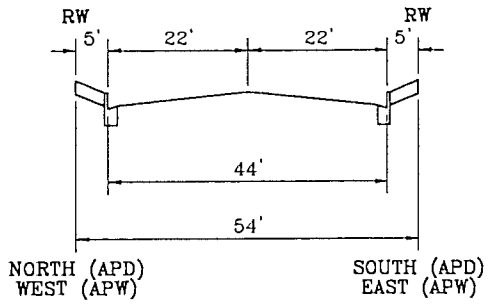


AUTO PLAZA DRIVE (APD)
STREET "A" TO NAGLEE ROAD
AND
AUTO PLAZA WAY (APW)
ROBERTSON TO AUTO PLAZA DRIVE
AND
STREET "A"
AUTO PLAZA DRIVE TO STREET "B"
FIGURE 4.27

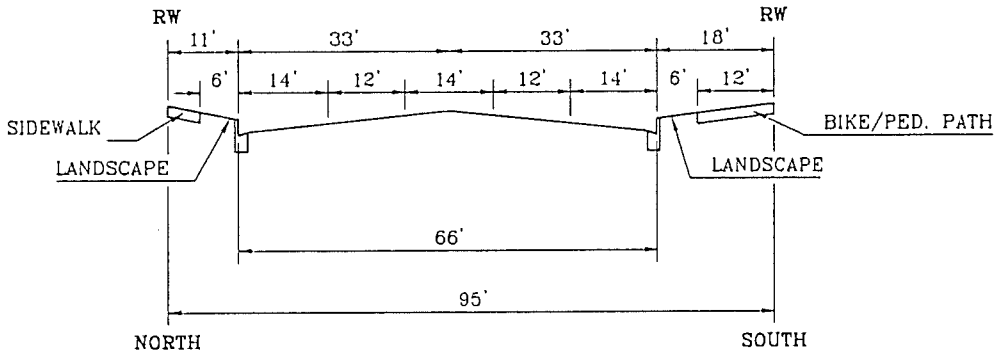


ROBERTSON DRIVE
FIGURE 4.26

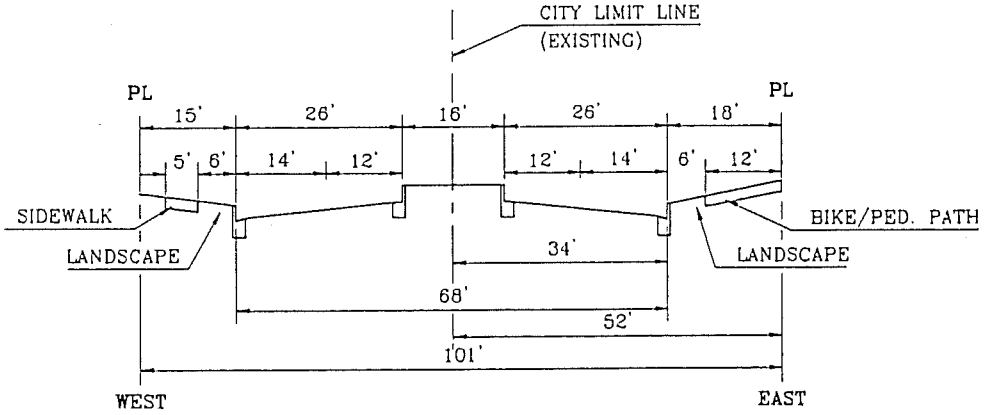


STREET "A"
GRANT LINE TO STREET "B"
FIGURE 4.25

| JOB NUMBER: COT012 | ROAD CROSS SECTIONS<br>GRANT LINE PLANNING AREA<br>I-205 CORRIDOR SPECIFIC PLAN AMENDMENT<br>CITY OF TRACY CALIFORNIA | Ruark and Associates Consulting Engineers | FIGURE 4.25, 4.26 & 4.27 |
|---|---|---|---|

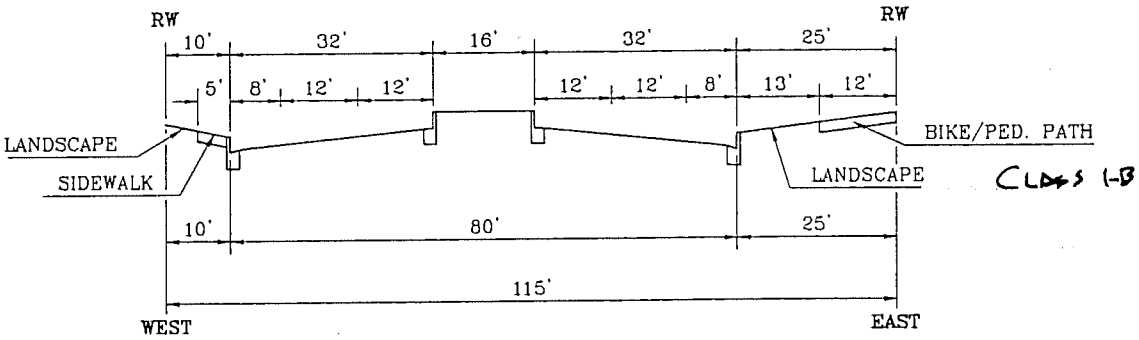


MacARTHUR DRIVE
GRANT LINE TO PESCADERO
FIGURE 4.28c

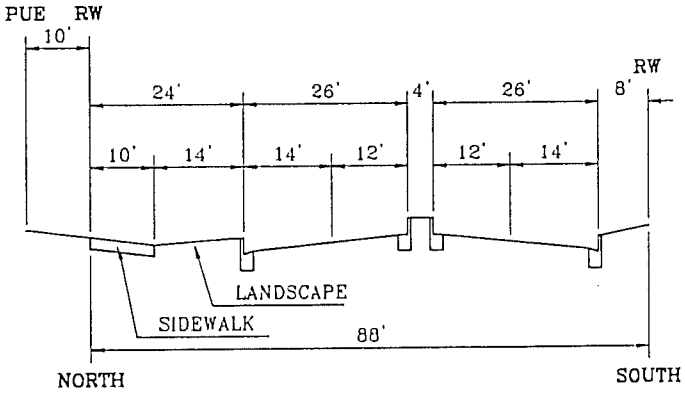


PESCADERO AVENUE
OUTLET MALL ENTRY #1 TO M4 EAST PROPERTY LINE
FIGURE 4.28b

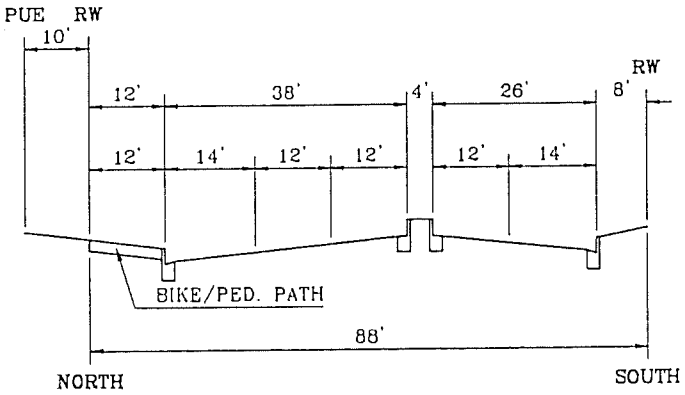


PESCADERO AVENUE
MacARTHUR DRIVE TO OUTLET MALL ENTRY #1
FIGURE 4.28a

| JOB NUMBER: COT012 | ROAD CROSS SECTIONS<br>Mac ARTHUR PLANNING AREA<br>I-205 CORRIDOR SPECIFIC PLAN AMENDMENT<br>CITY OF TRACY CALIFORNIA | Ruark and Associates<br>Consulting Engineers | FIGURE 4.28 (a-c) |
|---|---|---|---|

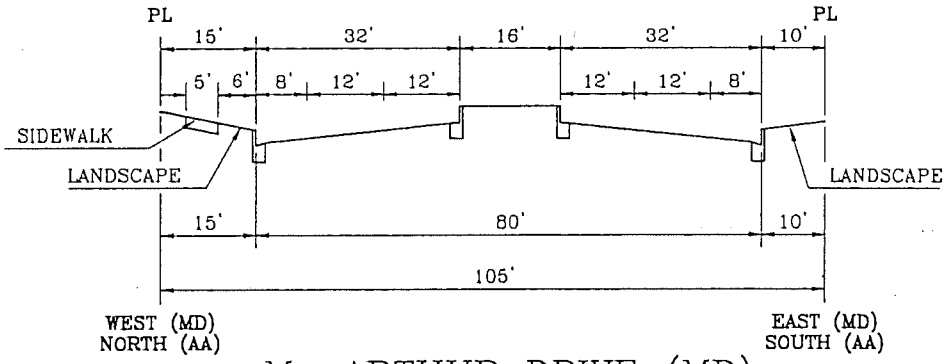


MacARTHUR DRIVE (MD)
NORTH OF I-205 TO ARBOR

AND

ARBOR AVENUE (AA)
MacARTHUR TO EAST PROPERTY LINE OF M2

(SUBJECT TO CHANGE, BASE UPON DEVELOPMENT REQUIREMENTS OF M1 AND M2)

FIGURE 4.28f

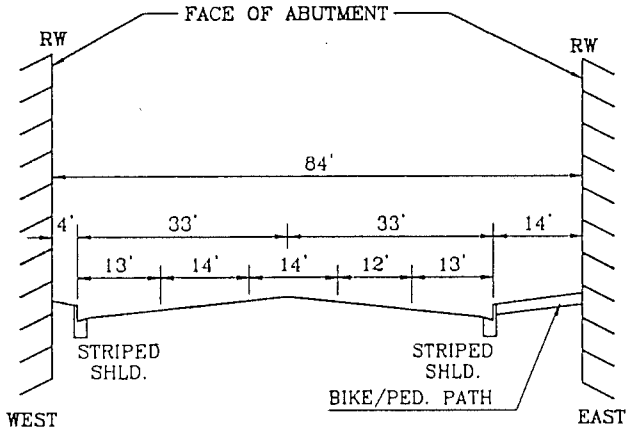


MacARTHUR DRIVE
BELOW I-205
FIGURE 4.28e

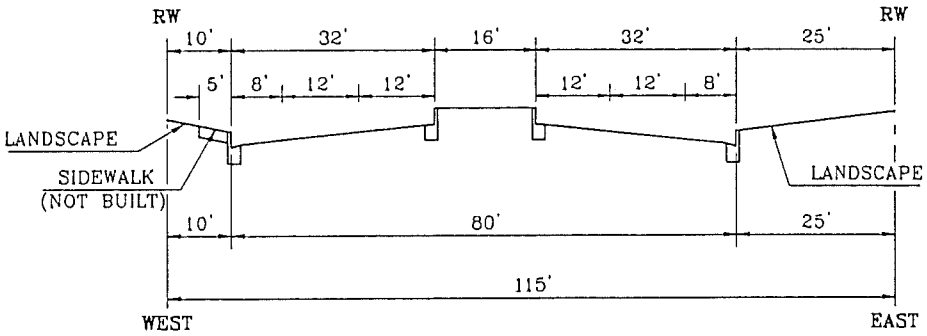


MacARTHUR DRIVE
PESCADERO TO I-205
FIGURE 4.28d

| JOB NUMBER: COT012 | ROAD CROSS SECTIONS<br>Mac ARTHUR PLANNING AREA<br>I-205 CORRIDOR SPECIFIC PLAN AMENDMENT<br>CITY OF TRACY CALIFORNIA | Ruark and Associates<br>Consulting Engineers | FIGURE 4.28 (d-f) |
|---|---|---|---|

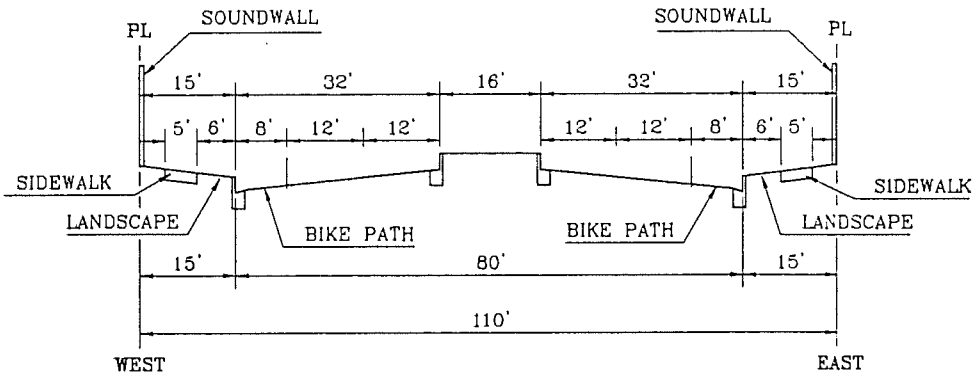


STREET "F" (JOE POMBO PARKWAY)
AT GRANT LINE

NOTE: SOUNDWALLS IN ACCORDANCE
WITH SUBDIVISION FINAL MAPS.

FIGURE 4.29b

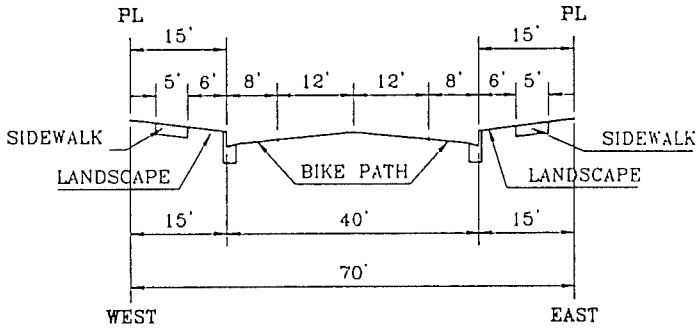


STREET "F" (JOE POMBO PARKWAY)
LOWELL TO POMBO WEST PROPERTY LINE

NOTE:
1. BIKE PATHS PER BIKE PATH MASTER PLAN.
2. SECTION OF POMBO PARKWAY BETWEEN WEST PROPERTY LINE AND "S" STREET WILL VARY TO MATCH THE ABOVE SECTIONS IN ACCORDANCE WITH THE APPROVED ALIGNMENT.

FIGURE 4.29a

| JOB NUMBER: COT012 | ROAD CROSS SECTIONS<br>GRANT LINE PLANNING AREA<br>I-205 CORRIDOR SPECIFIC PLAN AMENDMENT<br>CITY OF TRACY CALIFORNIA | Ruark and Associates Consulting Engineers | FIGURE 4.29 |
|---|---|---|---|

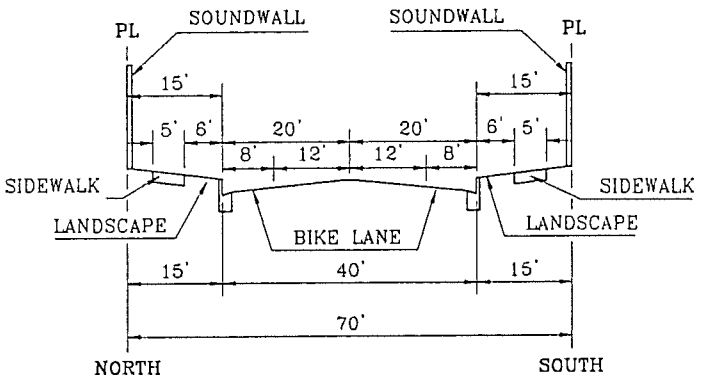


LOWELL AVENUE

CUL-DE-SAC TO CORRAL HOLLOW

NOTE: SOUNDWALLS IN ACCORDANCE WITH SUBDIVISION FINAL MAPS.

FIGURE 4.31

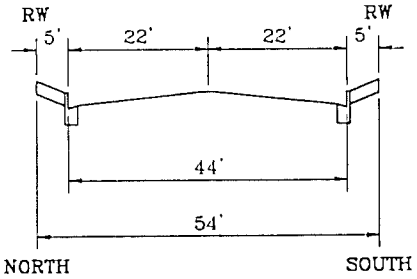


STREET "S"

END TO STREET "F" (JOE POMBO PARKWAY)

FIGURE 4.30

| JOB NUMBER: COT012 | ROAD CROSS SECTIONS<br>GRANT LINE PLANNING AREA<br>I-205 CORRIDOR SPECIFIC PLAN AMENDMENT<br>CITY OF TRACY CALIFORNIA | Ruark and Associates<br>Consulting Engineers | FIGURE 4.30 & 4.31 |
|---|---|---|---|

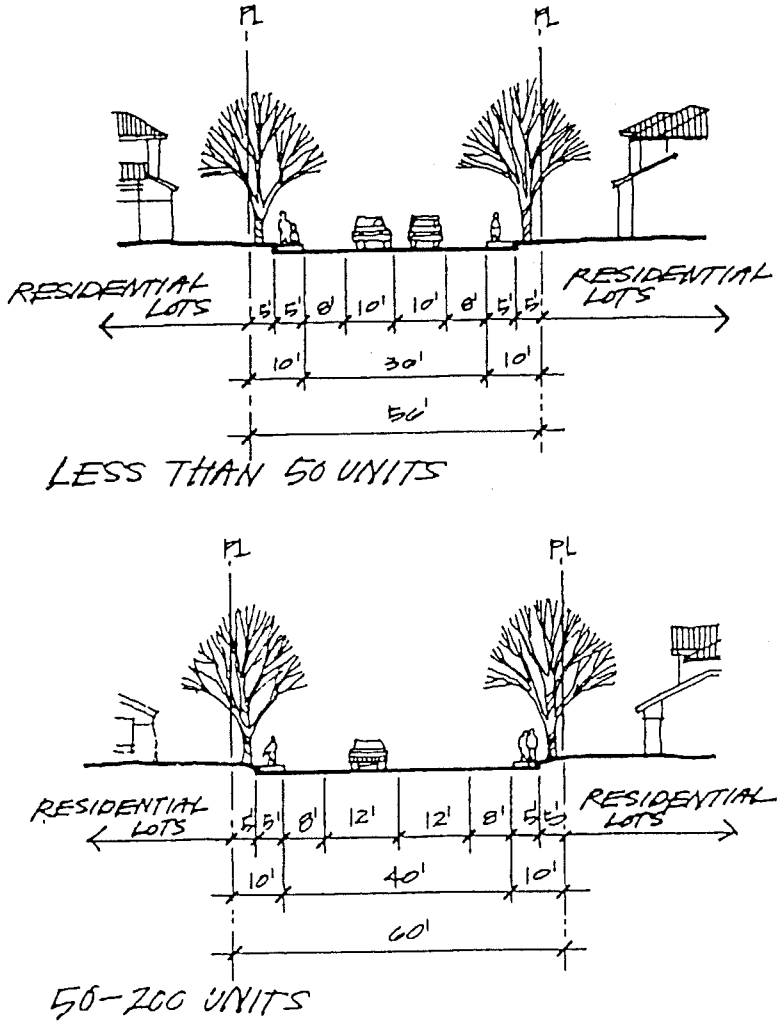


*Figure 4.32 - Typical Residential Street / Minor Collector*

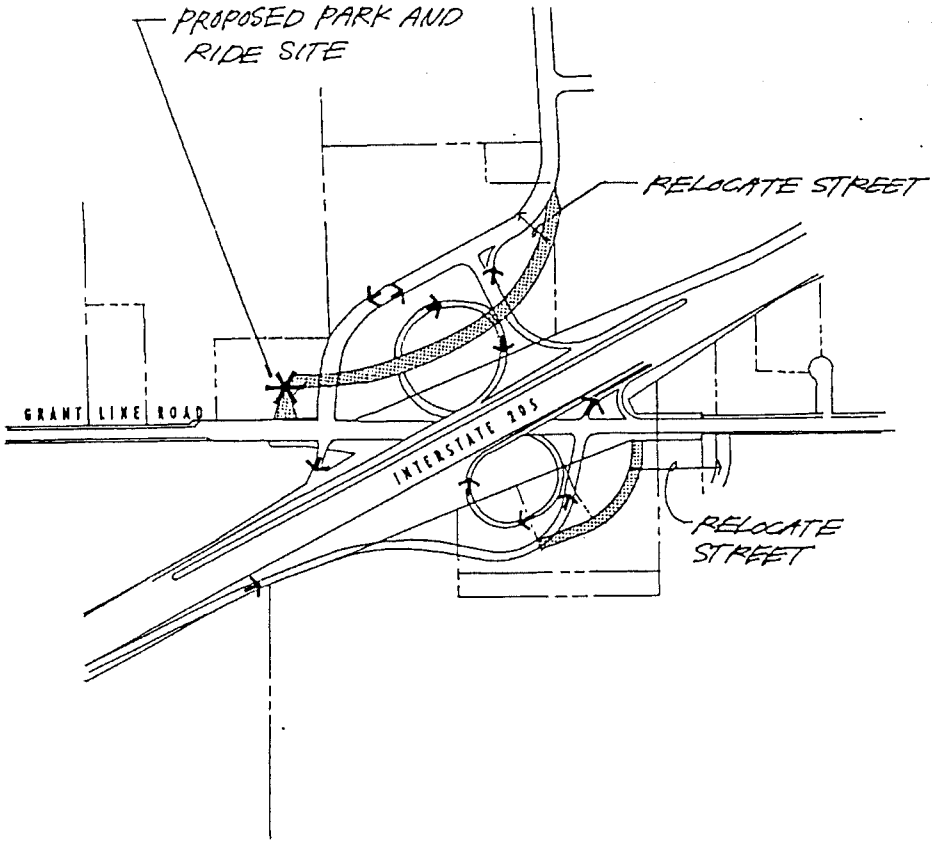


*Figure 4.33: Freeway Interchange*

frontage is on the major arterial, every effort should be made to consolidate access at a single driveway. In general, the rate of access points to arterial roads should not exceed an average of 1 median cut for every 660 feet of road. Each entry shall have a median and identity signage as indicated in Figure 4.34.

3. Street intersections shall be off-set a minimum of 250 feet to ensure smooth and safe traffic flow. In MDR residential districts this offset may be reduced to 220 feet with the approval of the Director of Public Works. "T" intersections are encouraged over four-way intersections.

4. Residential driveway spacing shall also be governed by the provisions of Paragraph 4.1.1.3 of this plan.

Guidelines for the dimensions and spacing of driveways are shown in Figure 4.34. It should be noted that these spacing guidelines are minimum values. The goal should be to exceed them where possible. In the vicinity of busy intersections, driveways will have to be located further from the intersection than indicated in Figure 4.34.

### 4.2.3 Intersection Signalization

Analyses of projected peak hour traffic volumes (with buildout of the Specific Plan and other cumulative development) indicate that traffic signals will be required at the following intersection:

Grant Line Planning Area:

Grant Line/Street "A"
Grant Line/Naglee Road
Grant Line/I-205 East Bound Off-Ramp
Grant Line/Street "F" (Henley Parkway)
Grant Line/Orchard
Grant Line/Corral Hollow
Naglee/Street "B"
Naglee/Mall Entry #2
Naglee/Mall Entry #3
Naglee Road/Street "C"
Street "A"/Street "B"
Street "B"/Robertson Drive
Corral Hollow/Lowell
Corral Hollow/Mall Entry# 4 (Mall Phase 2)

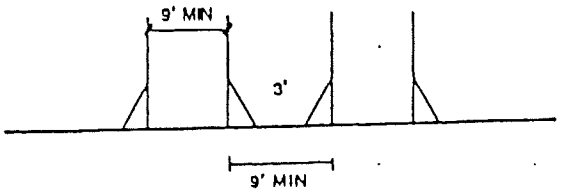


SINGLE FAMILY RESIDENTIAL DRIVEWAY DIMENSIONS AND SPACING

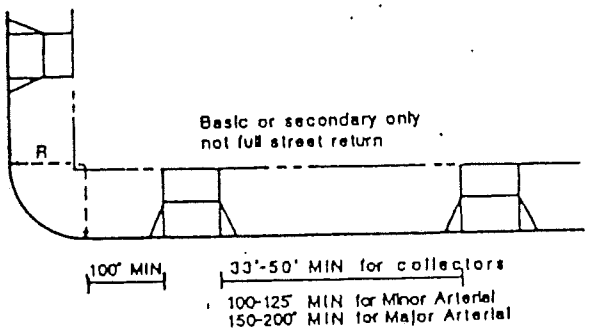


MULTI-FAMILY AND COMMERCIAL DRIVEWAY SPACING

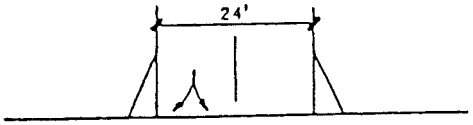


BASIC COMMERCIAL/MULTI-FAMILY

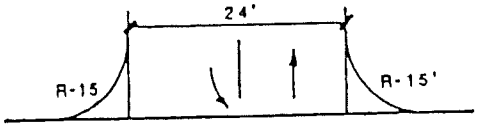


MODERATE VOLUME COMMERCIAL

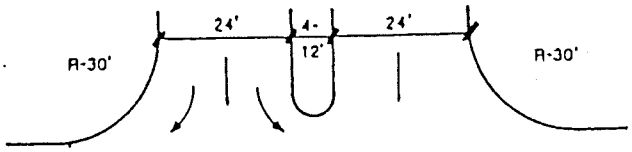


HIGH VOLUME COMMERCIAL

*Figure 4.34: Driveway Guidelines*

MacArthur Planning Area:

I-205/MacArthur (2 signals)
Grant Line/MacArthur

MacArthur/Pescadero

### 4.2.4 Grant Line Road/I-205 Interchange

The plan purposes improvements to the existing Grant Line Road/I-205 interchange. This work will add ramps facilitating the free flow of traffic to and from the freeway. A Project Study Report for these improvements has been submitted to Caltrans as the first step in proceeding with these improvements. The general configuration of this interchange is shown in Figure 4.33. The funding of these improvements is discussed in Chapter 5. The first phase of interchange improvements was completed in 1995.

### 4.2.5 Parking Standards

#### 4.2.5.1 Off-Street Parking - Residential

Standards for required parking in residential, commercial and industrial areas are located in the land use design standards, Section 4.1.1, 4.1.2, 4.1.3 and 4.1.4.

#### 4.2.5.2 On-Street Parking

Parking is permitted on residential and minor collector streets, and prohibited on major collector and arterial streets.

### 4.2.6 Transportation Systems Management (TSM)

The Specific Plan will necessitate increasing the scale of operation of Tracy Transit, the City's dial-a-ride-service. Expansion of this service will be essential to provide a measure of mobility to Tracy residents, current and future, who do not have access to an auto.

The Specific Plan has designated a site for Park and Ride facilities (see Figure 4.35). The facility will be located north of Grant Line Road near Naglee Road at the Grant Line/I-205 interchange. The two acre site has been located in accordance with California Department of Transportation (Caltrans) criteria and will accommodate 192 parking stalls.

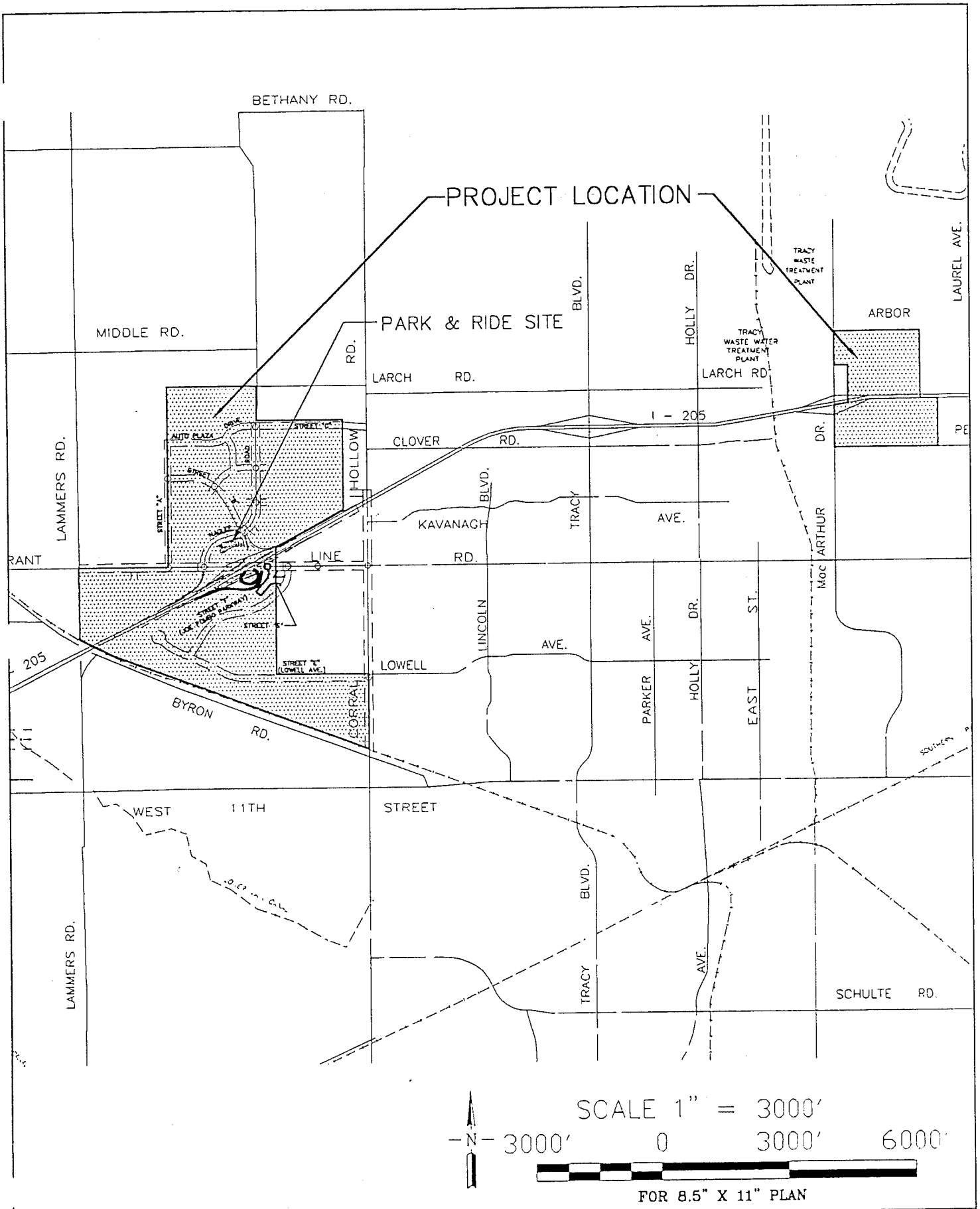


| JOB NUMBER: COT012 | PARK AND RIDE FACILITY<br>I-205 CORRIDOR SPECIFIC PLAN AMENDMENT<br>CITY OF TRACY CALIFORNIA | Ruark and Associates<br>Consulting Engineers | FIGURE 4.35 |
|---|---|---|---|

The criteria include both convenience and visibility from the freeway, located within one-half mile of the interchange and adjacent to commercial land so as to provide a sense of security for those leaving and returning to their automobiles. In implementing this lot, Caltrans will provide liability insurance however the City will have to acquire, improve and maintain the facilities.

The Park and Ride facility is an aspect of the project's traffic and air quality mitigation program. The funding of this feature is discussed in Chapter 5 of this plan. The funds for this project will come from Caltrans, San Joaquin County Council of Governments, San Joaquin Regional Air Pollution Control District and the I-205 Specific Plan. Construction for the lot will begin later summer of 1997.

### 4.2.7 Truck Routes

Within the I-205 Specific Plan area, truck routes should be limited to streets designated either major or minor arterials. Thus, truck routing will occur on:

Grant Line Road (east of Lammers)
Corral Hollow Road
Street "A"
Street "B"
Street "C"
Street "F" (Henley Parkway) (Grant Line Road to "S" Street)
Naglee Road

While trucks may use other streets in the area, their use should only be as needed to serve specific adjacent land uses.

## 4.3 Urban Design

### 4.3.1 Overview

The primary influences which affect the design of the I-205 Specific Plan are existing improvements including I-205, the Railroad line, and the Westside Irrigation District main drain channel; the landform characteristics of the site and existing planning environment. The area is flat with I-205 running through in generally an east-west direction.

Properties south of I-205 are proposed for a Planned Unit Development containing a variety of residential uses. Also proposed are some commercial activities near the I-205 interchange.

### 4.3.2 Entries

A. Entry Elements

Entries serve two primary purposes. The first is informational; they identify the community or subarea. To this end, entry graphics must be simple and clearly readable to the motorists.

The second purpose is to provide unifying design accents throughout the Specific Plan area. If each project or neighborhood in the area attempted to compete for attention via their entries, the overall unity of the area would be decreased. Therefore, there will be a common design treatment for all entries to reinforce the overall sense of community.

The entrances to the Specific Plan area have been designed in a hierarchical manner. There are three primary types of entries: city entries, major/community entries, and secondary /neighborhood entries. The approximate location of these entries is depicted in Figure 4.36. The following sketches indicate prototypical entry element designs. Specific entry design will be a function of future phases of development.
The types of entry elements are as follows:

1. City Entries

A city entry is a penetration point that acts as a "door" to the City. The only location in the Specific Plan area that has been identified as a city entry is the I-205 off-ramp at the proposed Grant Line Road interchange. Components of a successful city entry, as shown on Figures 4.37 and 4.38, include:

- Generous, freeway-scale tree planting
- Flowering accent trees
- Special paving, as a "welcome mat"
- Ground plane articulation
- A system of entry monumentation and walls, scaled to the automobile
- Care should be taken to preserve traffic sight lines

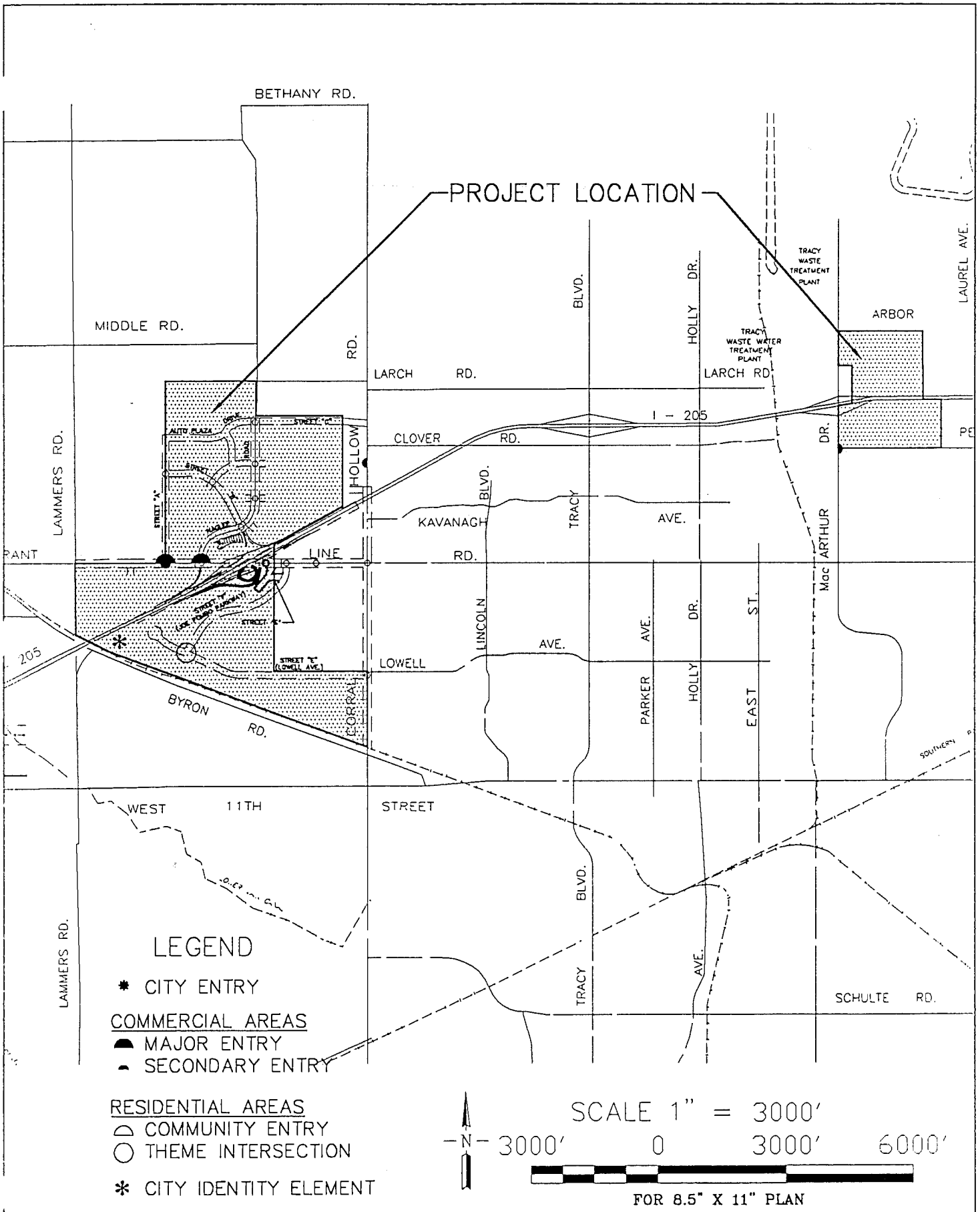


| JOB NUMBER: COT012 | ENTRY LOCATIONS<br>I-205 CORRIDOR SPECIFIC PLAN AMENDMENT<br>CITY OF TRACY CALIFORNIA | Ruark and Associates<br>Consulting Engineers | FIGURE 4.36 |
|---|---|---|---|

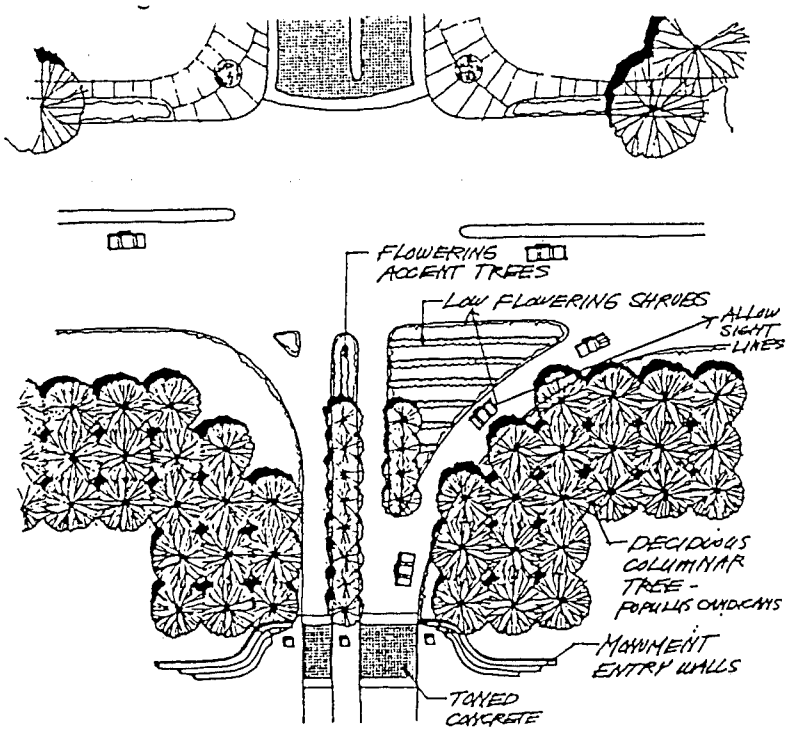


*Figure 4.37: City Entry*

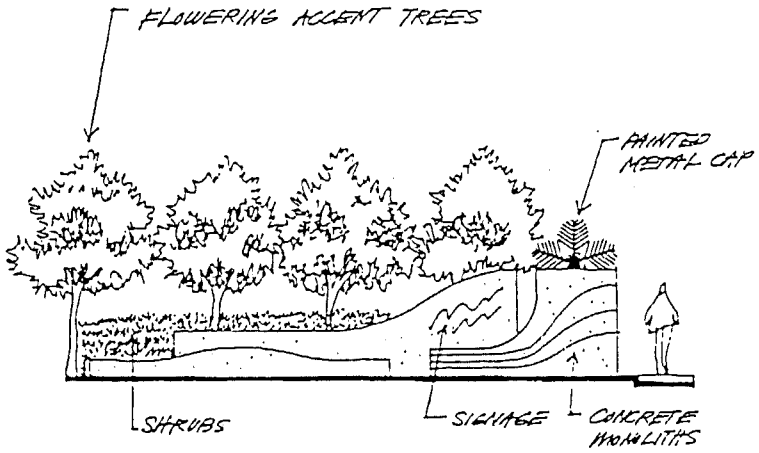


*Figure 4.38: Monolith Sign Wall*

2. Major Entries/Community Entries

The second type of entry in the hierarchy is the major entry/community entry. They are generally located at the intersections of major arterials within the Specific Plan area. The design treatment needs to vary depending in the character of the district; commercial areas and community areas are to be located in residential areas. Both of these entry types should be designed to create a "portal" and convey a sense of arrival. Components of a successful major entry/community entry, as shown in Figures 4.39, 4.40, and 4.41, include:

- a widened sidewalk at the intersection
- special pavement as a welcome mat
- special accent trees
- pots with flowering annuals
- a system of radiuses or curvilinear walls, with vertical monuments in key locations

3. Secondary Entries/Neighborhood Entries

The third type of entry in the hierarchy is the secondary entry/neighborhood entry. These entries are generally located at the intersection of collector streets with arterials, the intersection of two collector streets, or the entries to individual residential development neighborhoods. As with the previous type of entries, the character of the design treatment should vary, depending on whether it is an entry to a residential area or commercial area, thus the two different prototypes. Components of a successful secondary entry/neighborhood entry (as shown in Figures 4.42 and 4.43) include:

- A widened sidewalk at the intersection
- Special pavement
- Flowering annuals
- A system of walls and/or entry monuments
- In residential areas, signage for project name identification

Note that the secondary entry/neighborhood entry should be smaller in size and scale than the major entry/community entry.

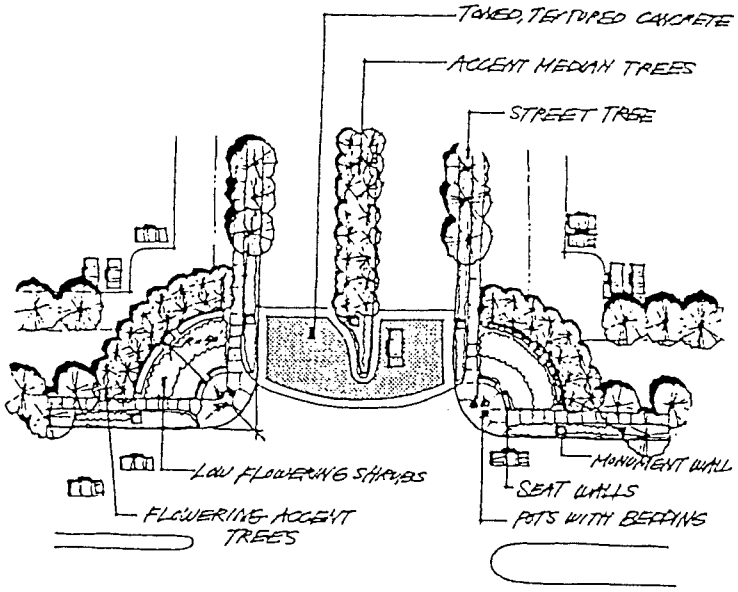


*Figure 4.39: Major Entry*

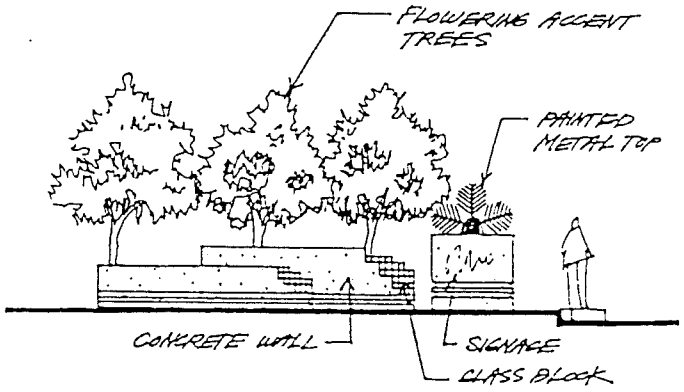


*Figure 4.40: Monolith Signage Walls*

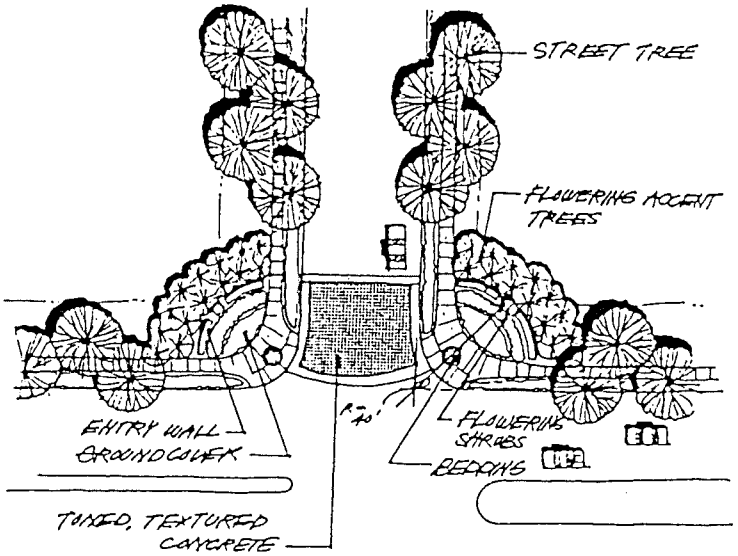


*Figure 4.41: Secondary Community Entry Prototype*

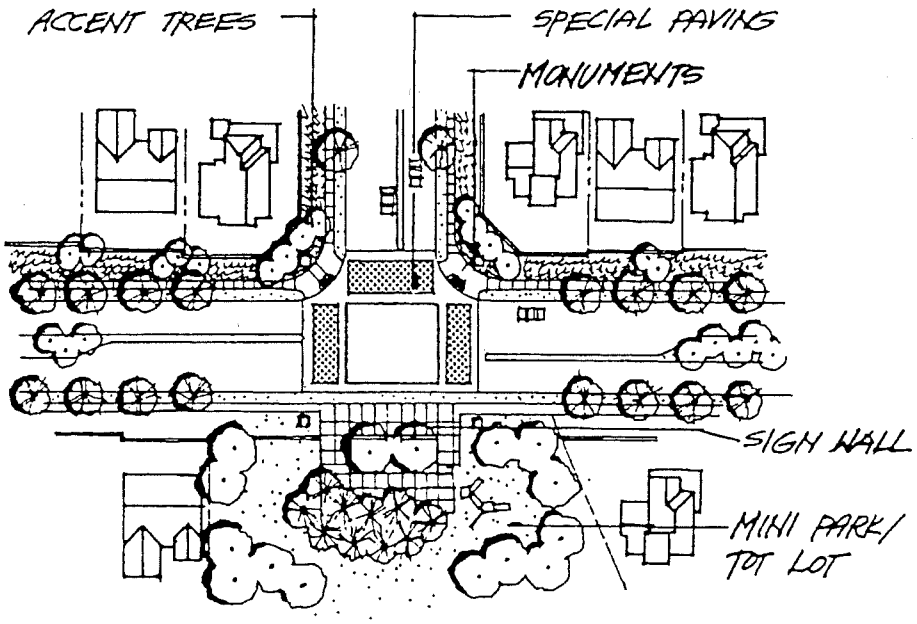


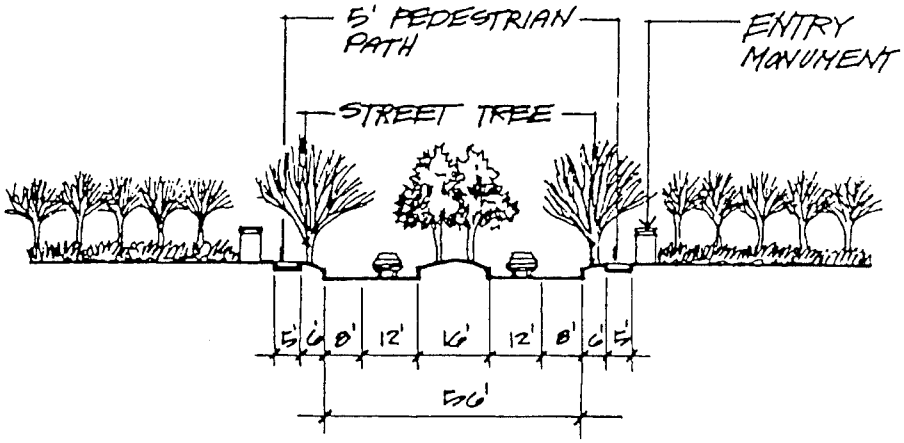


*Figure 4.42: Theme Intersection*

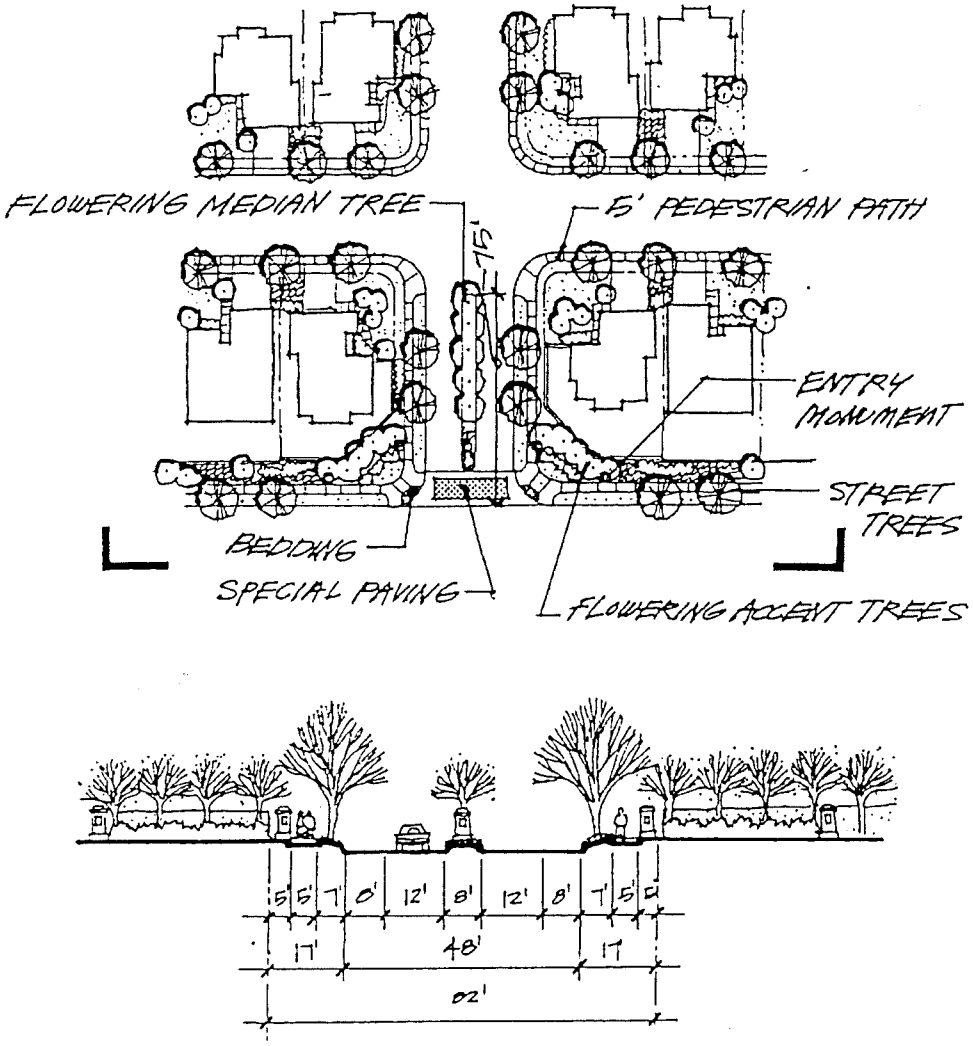


**Figure 4.43: Typical Neighborhood Entry**

B. General Guidelines

1. The entry zones shall be automatically irrigation per the City Tracy *Parks and Parkways Design Manual.*

2. Each of the entries to a given land development unit or residential community unit shall be uniform in design.

3. Entry elements in residential areas should relate to the architectural theme of the housing units.

4. Trees and shrubs shall be located so as not to interfere with clear sight lines, for vehicle safety. A sight triangle clear of obstructions shall be established at all entries, measured 45 feet from face of curb (see Figure 4.44).

5. Entry design shall establish a character that is consistent with Tracy's agricultural heritage.

6. Berms should be used to elevate or frame entry features.

7. Provide night lighting of entry features.

8. Section 4.3.3, Streetscape Standards and Guidelines, specifies the tree species to be used as the accent tree at each intersection.

9. Imaginative, high-quality, wall and sign designs are encouraged.

### 4.3.3 Streetscape Standards and Guidelines

A. General Guidelines

1. Design the streetscape to develop a clear hierarchy of streets to help establish a sense of orientation and organization within the I-205 corridor area. The landscape treatment of each street should be different and generally commensurate in scale with its importance, with larger trees along arterials and smaller trees on collectors and residential streets.

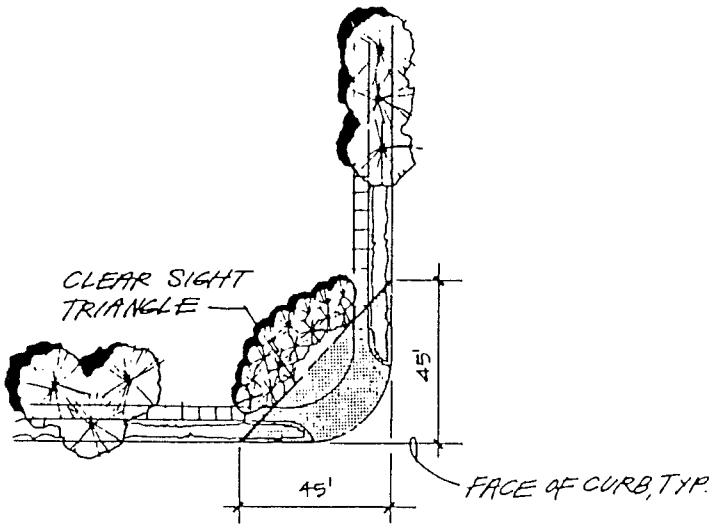


*Figure 4.44: Sight Line Clearances at Corners*

2. Develop street tree programs for all projects. Repetitive patterns are appropriate where roadway and building siting reflect a linear urban character.

3. Trees planted on streets should be of a minimum 15 gallon container size and trees should be properly staked at the time of planting. Maximum street tree spacing shall be 45 feet on center. Shrubs not used as ground cover should be a minimum of 1 gallon container size.

4. Landscape berms should be designed to a maximum 3:1 slope.

5. Utilize layout concepts and standard details contained in the City of Tracy *Parks and Parkways Design Manual* in the design development and construction of the streetscape.

6. Landscape design of residential streets should seek to establish a unifying theme in each neighborhood with a single tree species planted along each street. (Figure 4.45). A minimum of one tree shall be provided within the road right-of-way for each lot along residential streets.

7. Street tree planting should be coordinated with existing trees as well as utility pole locations.

8. The overall streetscape scene is comprised of the relationship between buildings, structures, street scale, adjacent views, signage, landscaping and street furnishings. Building massing, articulation of structures, setbacks, signage and the arrangement of street furnishings are discussed in other section of these guidelines. Figure 4.46 illustrates some important concepts.

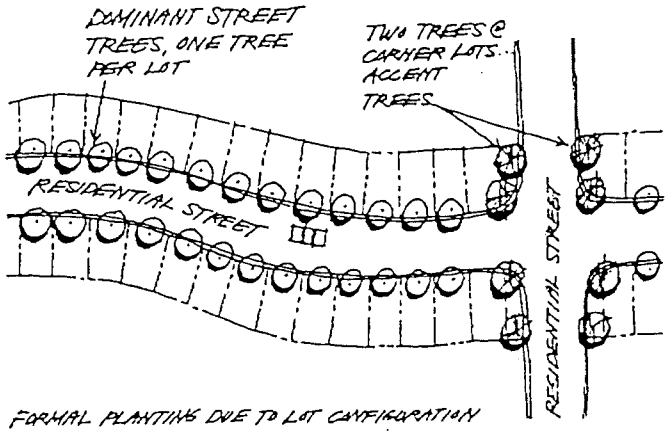


*Figure 4.45: Typical Street Tree Pattern*

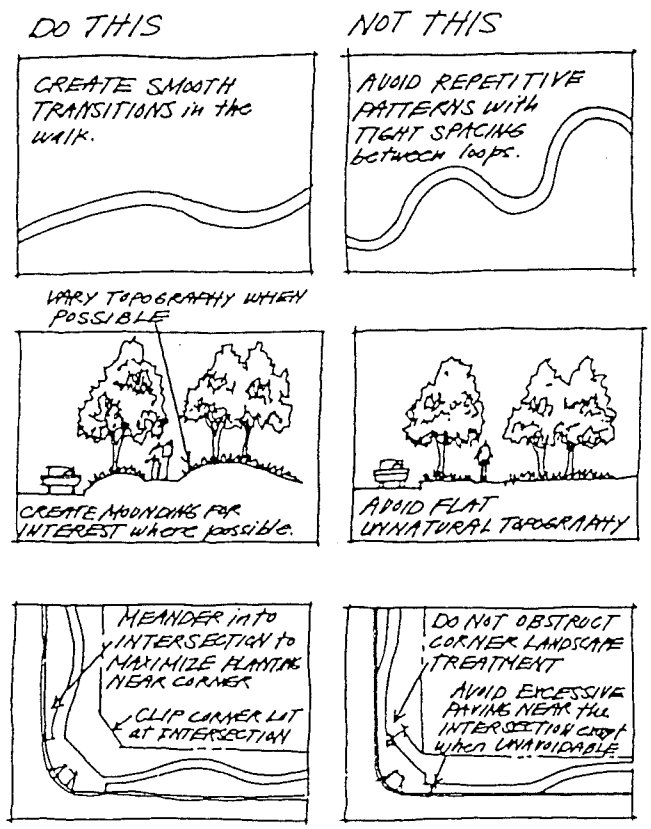


*Figure 4.46: Streetscape Concepts*

9. Lawns should generally be kept free of shrubs and trees and should be definite in form (no narrow, winding, amorphous "fingers" of lawn) having straight, geometric edges where possible.

B. Preliminary Street Tree Selections

GRANT LINE ROAD* - Major Arterial/Major Collector

Street "F" - Major Arterial
Street Tree: Pistacia chinensis
Median/Understory Tree: Prunus sargentii
Accent Tree: Prunus cerasifera 'Krauter Vesuvius', priority 1

CORRAL HOLLOW ROAD* - Major Arterial/Minor Arterial

Street Tree: Fraxinus holotricha 'Moraine'
Median/Understory Tree: Pyrus calleryana 'Bradford'
Accent Tree: Lagerstroemia indica 'Pink', priority 1
MACARTHUR DRIVE* - Major Arterial/Minor Arterial

Street Tree: Eucalyptus gunnii
Median/Understory Tree: Pyrus calleryana 'Bradford'
Accent Tree: Lagerstroemia indica 'Pink', priority 1

ORCHARD PARKWAY* - Major Collector

Street Tree: Platanus acerifolia
Median/Understory Tree: Crataegus phaenopyrum
Accent Tree: Malus 'Liset', priority 1

STREET 'A' - Major Arterial

Street Tree: Eucalyptus gunnii
Median/Understory Tree: Pyrus calleryana 'Bradford'
Accent Tree: Malus floribunda, priority 3

STREET 'B' - Major Arterial

Street Tree: Fraxinus oxycarpa 'Raywood'
Median/Understory Tree: Crataegus phaenopyrum
Accent Tree: Malus floribunda, priority 4

STREET 'C' - Major Arterial

Street Tree: Fraxinus holotricha 'Moraine'
Median/Understory Tree: Prunus sargentii
Accent Tree: Populus 'Candicans', priority 2

STREET 'D' and NAGLEE ROAD - Minor Arterial

LARCH ROAD - Major Collector

Street Tree: Alnus cordata
Median/Uderstory/Accent Tree: Malus species, priority 4

STREET 'E' and STREET 'F' - Major Collector

Street Tree: Liquidambar styraciflua
Median/Understory Tree: Crataegus phaenopyrum
Accent Tree: Nerium oleander 'Standard', priority 3
LOWELL AVENUE* - Major Collector

Street Tree: Liquidambar styraciflua
Median/Understory Tree: Crataegus phaenopyrum
Accent Tree: Albizzia julbrissin, priority 5

TYPICAL INDUSTRIAL COLLECTOR

Street Tree: Eucalyptus nicholii, or Fraxinus oxycarpa 'Raywood", or Alnus cordata
Accent Tree: Lagerstoemia indica 'Pink', priority 5

* Per *Parks & Parkways Design Manual*

Notes:

Street Tree: To be used entire length of street specified, except at corners.

Median Tree/Understory Tree: To be used entire length of median in street specified, except at intersection medians. Also use as understory tree along street edge.

Accent Tree: To be used as accent tree at intersection medians and street corners. At intersections, the accent tree with the higher priority (1 = highest, 5 = lowest) shall be used on all four corners.

### 4.3.4 Street Furniture and Lighting

A. Street Furniture

1. Benches, bollards, trash receptacles and other furnishings should be provided at appropriate locations in the open space and streetscape network. Figure 4.47 shows concepts for street furniture in the streetscape.

2. All furnishings should be resistant to the weather and vandalism.

3. A consistent furnishing style shall be adopted and employed for use throughout the Specific Plan area.

B. Lighting

The design issues of "lighting" includes street lighting, as well as, building and landscape accent lighting, and sign illumination. Several basic guidelines should be considered in the provision of lighting:

1. Illumination standards for arterial, collector and residential streets should reflect the different right-of-way widths and functions.

2. Light fixtures and standards shall meet all safety standards and be employed throughout the length of each street. It is recommended that one lighting fixture style be employed for use on all streets.

3. Street lights should provide a safe and desirable level of illumination for both motorists and pedestrians without intruding into residential areas. See Figure 4.48 for residential area lighting concepts.

4. Lighting system should consider energy and maintenance conserving methods by using efficient lighting equipment.

5. Lighting should be placed where it can best aid in illuminating activity areas. The site should not be overly lit. Electroliers should be scaled in size to match the size of areas to be lit and should relate to human scale, especially in pedestrian areas.

6. Area lighting should be directed predominantly downward and shall be spaced to prevent glare or excessive spray of light on neighboring sites.

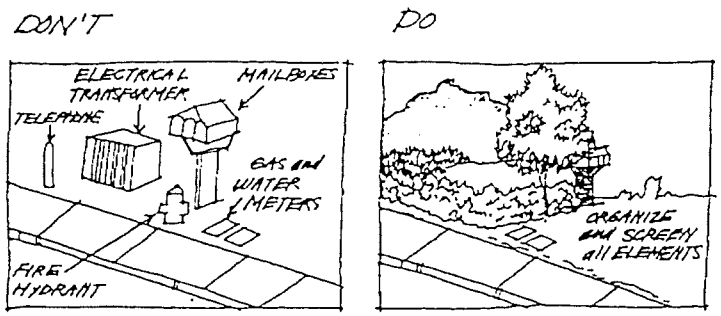


*Figure 4.47: Parkway Furniture*

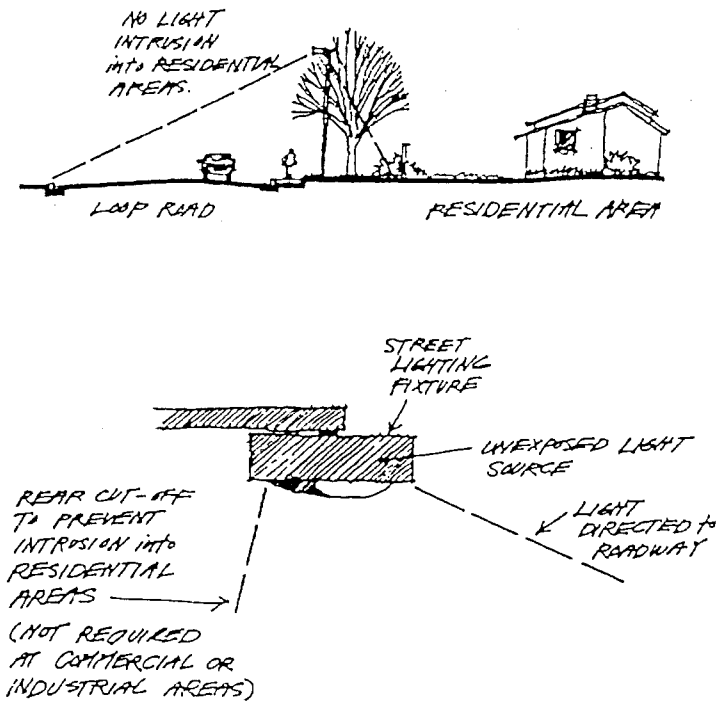


*Figure 4.48: Residential Lighting Concepts*

7. Accent illumination should be provided at key locations such as building entries and driveway entries.

8. Pedestrian walkways, plazas or other activity points should be illuminated. Such lighting should illuminate changes in grade, path intersections, seating areas, and any other areas along a path which, left unlit, would cause the user to feel insecure. As a rule of thumb, one foot candle per square foot is adequate.

9. While High Pressure Sodium lighting is most appropriate for parking lots consider the use of Metal Halide light sources adjacent to buildings and in pedestrian areas. Metal Halide lighting is preferred in these areas as it provides a true rendition of building, planting and people colors. Light should not blink, flash or change intensity. Use of low pressure sodium lamps is not recommended due to poor color rendition.

10. Light posts should be located in such a manner that they will not become safety hazards to pedestrians or vehicles.

11. The style of light fixtures and their location should complement the architectural and landscape design character. Imaginative lighting designs are encouraged.

12. Service area lighting shall be contained within the service yard boundaries and enclosure walls. No light spillover should occur outside the service area.

13. Shatterproof or vandal resistant coverings are recommended for low-level lighting where there is danger of breakage.

### 4.3.5 Freeway Interface

The control of views of Tracy from Interstate 205 is critical for the establishment of a quality theme. These guidelines provide for the development of a well-maintained green zone along this edge, while also allowing signage and retail visibility. Figure 4.49 illustrates freeway edge design concepts.

A. General Guidelines

1. Locate service and storage areas to minimize visibility from Interstate 205.

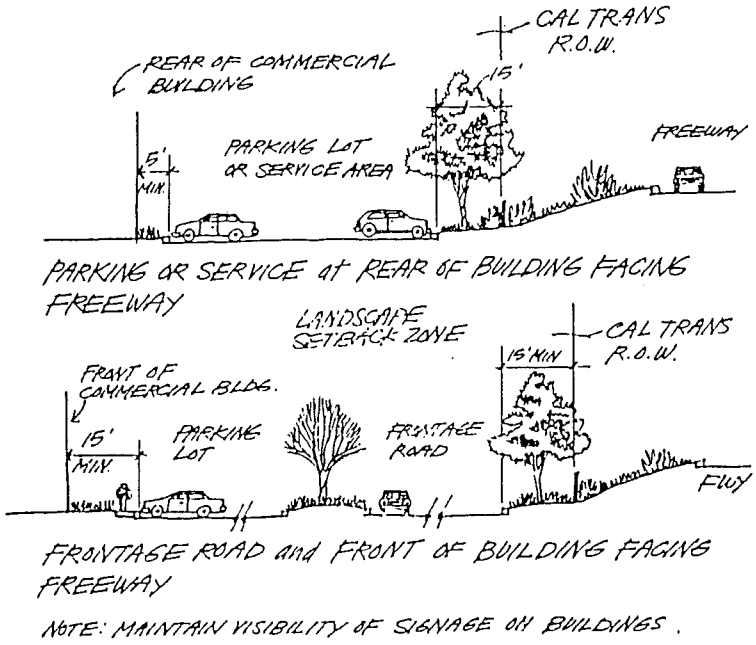


*Figure 4.49: Freeway Edge Concepts*

2. Work with Caltrans to develop suitable plans for landscaping in the freeway right-of-way reflective of Tracy's agricultural setting.

3. A 8 foot sound wall shall be provided at residential interfaces where noise levels exceed accepted standards. Sound walls shall be designed and laid out so as to create visual interest and articulation, rather than being a flat plane. The distance from wall to right-of-way shall vary.

B. Setback Areas

1. All setback zones shall be planted with a combination of trees, shrubs, and groundcover. Automatic irrigation is required of all planted areas.

2. When a drainage channel is located in the setback and adjacent to the Caltrans right-of-way it shall be landscaped per the provisions of the *Parks and Parkways Manual.*

3. Use large-scale trees, from a 15-gallon can minimum, grouped in single species clusters. Mass trees to avoid blocking views of commercial signage, while providing at least one tree per 1500 square feet of setback area.

4. Plant shrubs in an informal hedge near the property line, with gaps between hedges of 50 feet maximum. Install from 1 gallon cans, minimum, in single species clusters at least 100 feet long.

5. Hydroseed or otherwise install permanent groundcover in all places not planted with shrubs.

## 4.4 Park and Open Space Standards and Guidelines

### 4.4.1 Park Standards and Guidelines

A. General Guidelines

1. Design outdoor spaces to accommodate a variety of events. This makes a park more versatile and dynamic while supporting a diversity of individual needs.

2. Create a strong spatial frame for outdoor spaces with trees, flat ground plane and pathways, thereby allowing the space to adapt to varying activities and densities of people.

3. Encourage opportunities for both public gathering and intimate private spaces.

4. Provide a variety of lighting conditions - sunny, dappled or shady.

5. Require contributions to development of a park system by both residential and non-residential developers.

6. Plan for park improvements maintaining a balance between active and passive recreation activities.

7. Coordinate park acquisition, development, and recreation programs with the school district.

8. Utilize the program matrix, park layout concepts, and standard details contained in the City of Tracy *Parks and Parkway Design Manual* in the design development and construction of parks.

9. Enhance safety in parks by:

- Safety and security in design
- Adequate lighting
- High visibility from roads for surveillance
- Safe access to parks

B. Facility Types

1. Neighborhood Park - As defined by the City of Tracy's *Parks and Parkways Design Manual*, a neighborhood park is developed primarily to serve the social, sport, and passive recreational needs of individuals and groups within each particular neighborhood in Tracy. The park improvements are oriented to all ages, providing activities for children, teens and adults.

Features might include tennis courts, a softball field, a soccer field, a picnic area and a play area, as possible on the site. Emphasis is on social interaction and community activities. In addition, it is important to provide adequate parking and restrooms for neighborhood parks to accommodate peak use on weekends. Beyond the generic features listed in the *Design Manual*, specific design features of this neighborhood park should include:

- Heavy buffer tree planting and fencing at the edge adjacent Southern Pacific Railroad right-of-way to control noise, and to prohibit access.

- A freeway-scale city identity element located to be highly visible from the freeway.

- Entry and arrival zones relating to and visible from the community collector roadway.

- Implementing one of the freeway edge discussed in Section 4.3.5 to provide relief from the external noise generated by the freeway traffic.

The neighborhood park now located at the intersection of Lowell Avenue and Orchard Parkway as shown in Figure 4.50 as generated by the *84-1 Residential Areas Specific Plan* and is located outside of the in-205 Corridor Specific Plan boundary. Funding for this neighborhood park was provided by the 84-1 Residential Specific Plan.

2. Mini-Parks As defined by the *Parks and Parkways Design Manual*, mini-parks are play area spaces in subdivisions where immediate access to a neighborhood park is limited. They also serve as a visual amenity and focal point for the neighborhood. Thus, subdivisions that include areas that are 660 feet (1/8 mile) or further from a neighborhood park or school are required to provide public open space in the form of one half acre mini-parks. Mini-parks are also required if access to a major open space is blocked by a major street. These play areas shall be dedicated to the City and developed by the subdivision developers.

- Mini-park features might include children's play area, half court basketball, and a parent's observation area as fits each specific site.

- Centrally locate each mini-park within the subdivision they are intended to serve (see Figure 4.51). Link the parks to neighborhood open space and bikeway systems where feasible.

- Provide a unique identity for each mini-park through the use of a fountain, artwork, special landscaping, or other focal park elements.

- Private open space may be substituted for public mini-parks provided the service area of the mini-park is entirely within one form of land ownership such that all residents are guaranteed use of the mini-park. Additionally, the minimum park dedication requirements must be met overall and the dedication ensured for perpetuity.

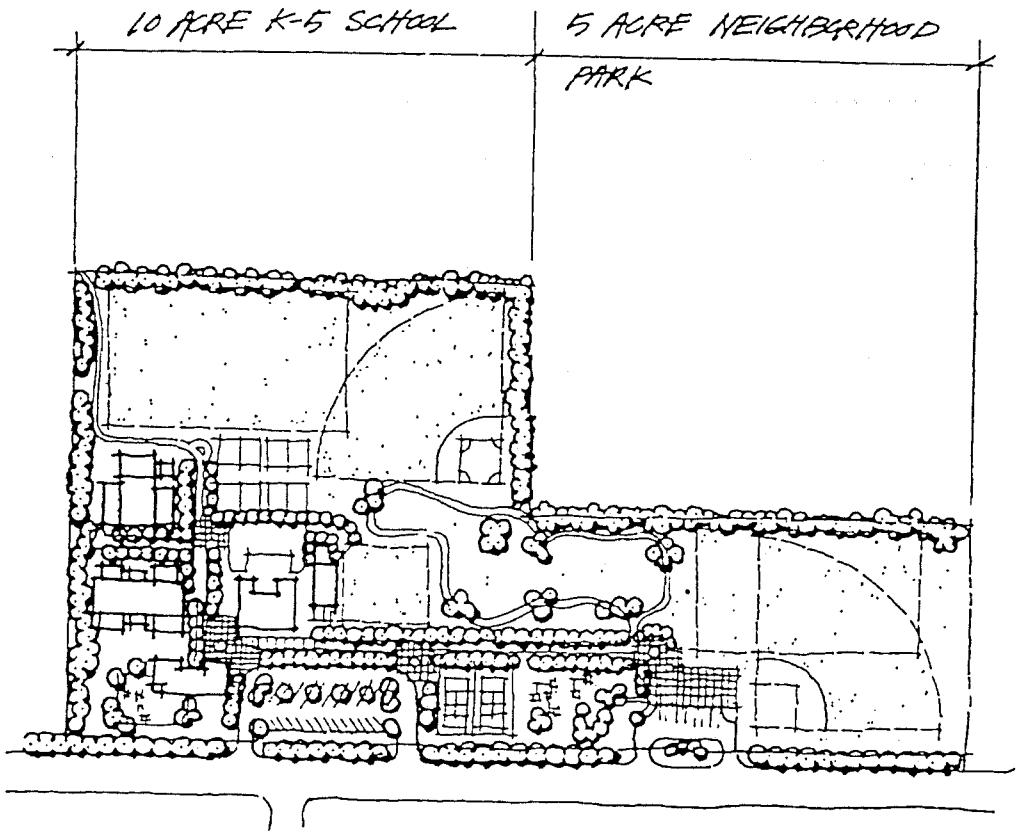


*Figure 4.50: Elementary School and Park Prototype*

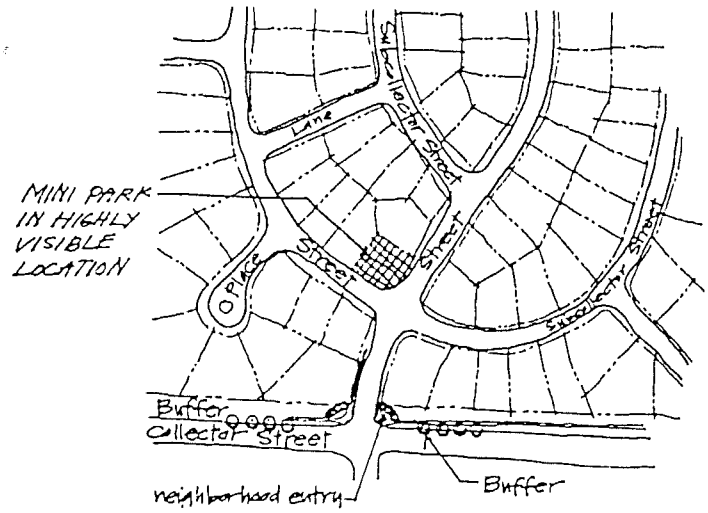


*Figure 4.51: Open Space Awareness from Major Roads and Entries*

Conceptual plans for each of the two neighborhood parks (including the park funded by the 84-1 plan) and a prototypical mini-park are shown in Figures 4.50, 4.51 and 4.52. They present the types of facilities which could be constructed at each site, taking into consideration the individual site constraints and minimum park criteria expressed by the City in the *Parks and Parkways Design Manual*. These plans are conceptual in nature and are meant to provide a basis from which to work during the planning for each individual park site.

The implementation of these public park facilities, including the proposed ownership and maintenance responsibilities, is described in the Implementation Plan, Section 5. All of the facilities described in this section are proposed for ownership by a public agency.

### 4.4.2 Pedestrian and Bikeway System

#### 4.4.2.1 Bikeways

A. Facility Types

As defined in the City of Tracy *Bikeways Master Plan* (1989), the term "bikeway" refers to any type of facility that accommodates bicycle travel. Goals contained in the plan applicable to the in-205 Corridor Area include:

Goal 1B: Encourage the development of Class I bicycle paths wherever adequate right-of-way and funding is available.

Goal 1C: Provide Class II bike lanes within the right-of-ways of all new major arterial roadways where truck routes exist.

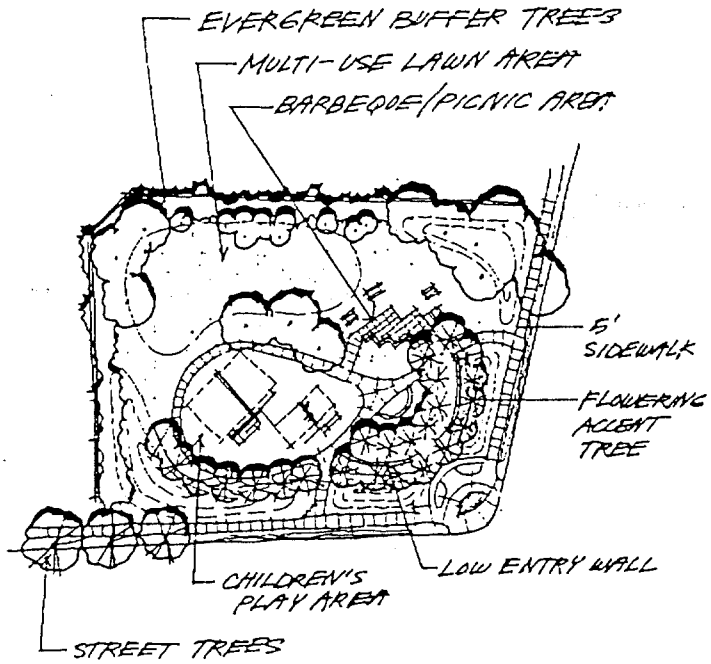


*Figure 4.52: Mini Park Prototype*

Two of the three classifications of bike facilities in the *Bikeways Master Plan* are planned for the in-205 Corridor Specific Plan area; as follows:

- Class I Bikeways (Bike Paths) provide for two-way travel on a right-of-way completely removed from streets or highways, for the exclusive use of bicycles.

- Class II Bikeways (Bike Lanes) provide a striped lane for one-way bike travel.

Typical cross sections, as detailed on the *Bikeways Master Plan*, are shown in Figure 4.53. Bikeways are provided within the plan as shown in Figure 3.3 and Table 4.4.

B. Guidelines

The following guidelines shall apply to bikeway development within the in-205 Corridor:

- Adhere to design guidelines and standards contained in Chapter 4 of the City of Tracy *Bikeways Master Plan*.

- Provide a 8'-6" foot minimum vertical clear zone above all bikeways for safety.

- All bikeways not dedicated to the City shall be designated a permanent easement for purposes of public access.

- Provide adequate landscaping and grade separation between bikeways/roadways and bikeways/pedestrian ways.

- Provide an adequate minimum sight line at pathway and roadway intersections. Minimize intersections as much as possible.

- Bikeways should be straight, direct and continuous.

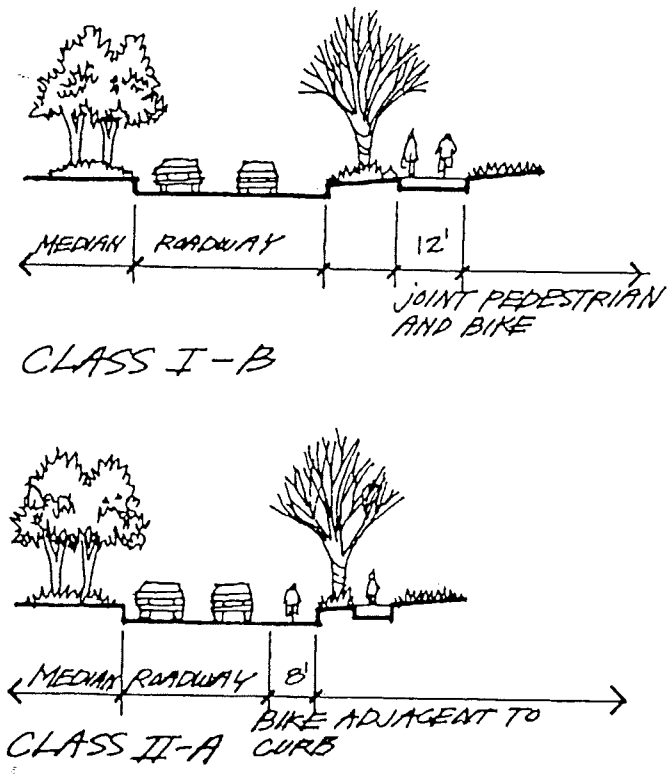


*Figure 4.53: Class I Bike Paths / Class II Bike Lanes*

Table 4.4

Plan Bike Areas

| Class | Street | Description |
|---|---|---|
| II-A | Corral Hollow Road | Byron Road to Mall Entry #4 |
| II-A | Grant Line Road | Lammers Road to Corral Hollow Rd: both sides |
| II-A | Lowell Avenue (Street "E") | Both sides |
| II-A | Henley Parkway (Street "F") | Both sides |
| I-B | Street 'B' | Naglee Road to Street 'A', north side |
| I-B | Street 'C' (east/west) | Naglee Road to Corral Hollow Rd, south side |
| I-B | Naglee Road | Grant Line Road to Street "C" east side |

### 4.4.2.2 Pedestrian Routes

A. Guidelines

- Provide continuous grade-separated pedestrian connections within all commercial, industrial, and residential areas.
- Locate sidewalks a minimum of six ft. from the curb in industrial /commercial areas to avoid conflicts with heavy vehicles.
- Provide adequate landscaping and grade separation between pedestrian routes, roadways, as well as pedestrian routes and bikeways.

- All public pedestrian routes not dedicated to the city shall be designated a permanent easement for purposes of public access.

- Design of pedestrian route on Grant Line Road under freeway.

- Refer to City of Tracy *Parks and Parkways Design Manual* for specific design and construction guidelines.

### 4.4.3 Drainageways

Drainageways within the residential area south of Grant Line Road shall be designed as an open space feature. Although not carrying a through bicycle path it should be designed to link with required mini-parks. A neighborhood street should parallel the channel providing a security overview and an access way for maintenance personnel. The channel shall be constructed to the section shown in Figure 4.54 and landscaped in accordance with the *Parks and Parkways Manual.*

## 4.5 Building in FEMA Floodplain

Sites within the plan area that lie below the 100 year flood contour are shown in Figure 3.3. Building in this floodplain shall be governed by the following criteria:

- Finished floor elevations of buildings to be constructed within this zone must be set a minimum of one foot above FEMA 100-year contour.

- The lowest portion of the parking area serving the building may be set no lower than four feet below this FEMA 100-year floodplain.

- Any project requiring large quantities of fill in order to meet the provision of this section shall be subjected to further environmental review.

- Other conditions may be imposed by the Director of Public Works during review of the Development Plan.

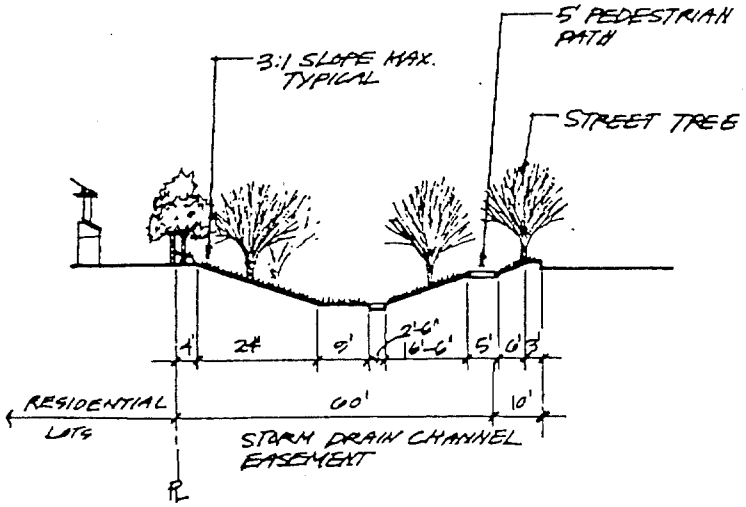


*Figure 4.54: Drainage Section*

# CHAPTER 5 - IMPLEMENTATION OF THIS SPECIFIC PLAN

## 5.1 Development Plan Processing

### 5.1.1 Introduction

Full implementation of the I-205 Specific Plan will involve a series of plan and project approvals, (see Figure 5.1.) All subsequent development plan processing will be governed by the PUD regulations in the Tracy Municipal Code.

The following sections describe the PUD processing procedure. Refer to the Tracy Municipal Code for specific PUD submittal requirements and approval and appeal procedures.

### 5.1.2 Implementation

All projects require detailed planning per the Preliminary and Final Plan requirements of the City's PUD ordinance. This is discussed in detail in the following sections of this chapter and the process is shown diagrammatically in Figure 5.1.

#### 5.1.2.1 Environmental Review

The I-205 Specific Plan EIR serves as the environmental analysis of the Specific Plan itself and many of the projects proposed by the plan. In some cases, a sufficient level of detail and analysis will have been provided to allow commercial and industrial projects to eliminate the need for subsequent environmental review. In some cases, however, subsequent environmental analysis resulting in a Negative Declaration, a Mitigated Negative Declaration or a subsequent EIR may be required to review and analyze site specific, project-level environmental concerns. This analysis may rely heavily upon, or "tier" from, findings of the I-205 Specific Plan EIR and may focus additional analysis on those factors not previously assessed.

#### 5.1.2.2 Approval of Preliminary and Final Development Plans

For all projects in the Specific Plan area, approval of Preliminary and Final Development Plans are necessary. The Final Development Plan is that point in the permitting process where projects must demonstrate consistency with the use, density and site planning.

The following are issues of concern that will be part of the Preliminary Plan:

1. Use Permits - As indicated in detail in Appendix A, May use allowed in the I-205 plan area are allowed in only after obtaining use permit approval. Use permits can also be required after a structure is built when it becomes vacated of a previous use.

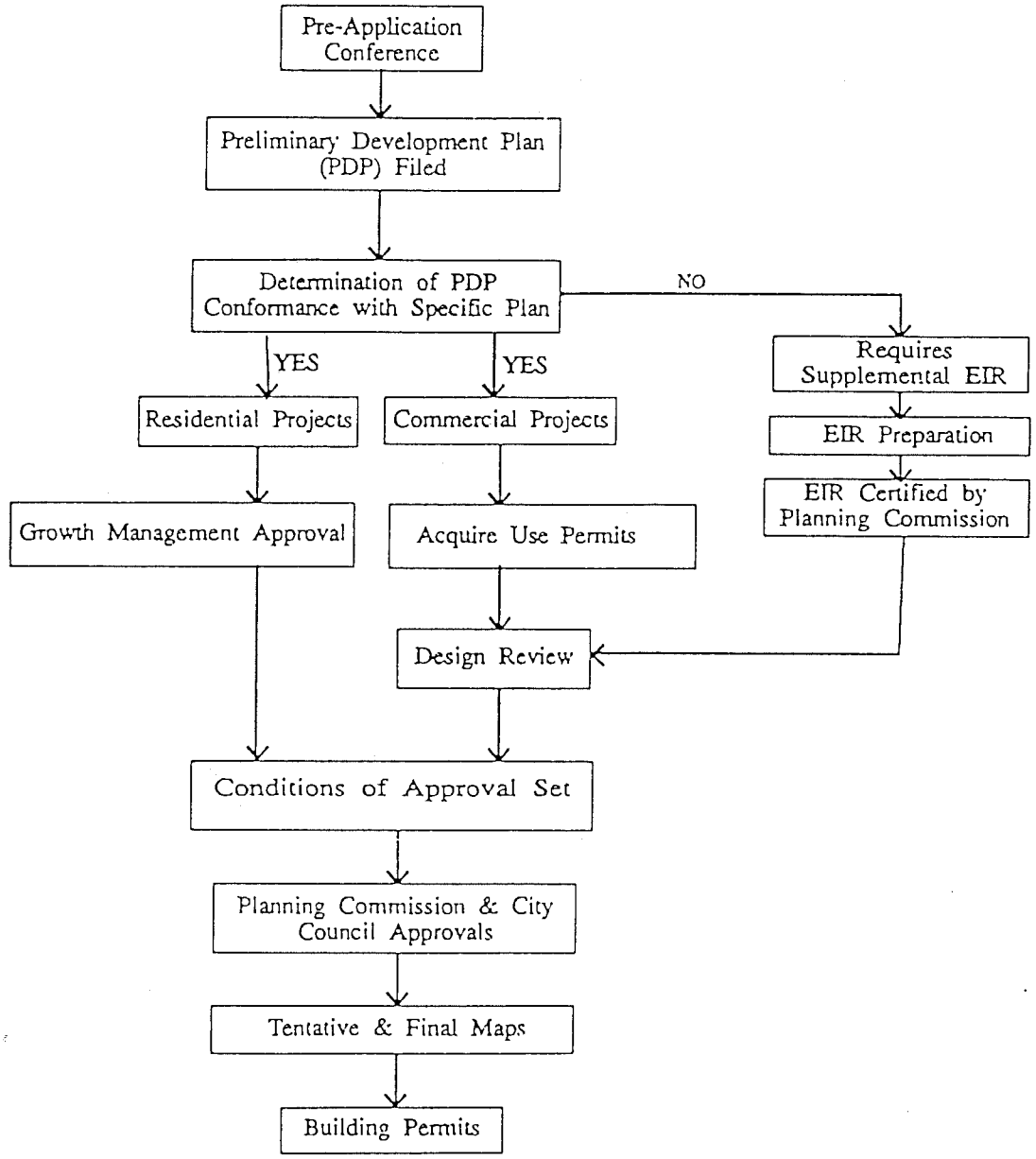


*Figure 5.1 - Development Processing*

2. Conditions of Approval - These may be attached to approval of any Final Development Plan to insure consistency with the Specific Plan as well as control land use activities approved in the Final Development Plan.

3. Growth Management of Residential Plans - In addition to approval of the Final Development Plan, residential projects in the I-205 study area will be required to comply with the provisions of the Growth Management's Ordinance in effect at the time.

4. Threshold Determinations for Commercial and Industrial Plans - The planned expansion of the City's infrastructure systems has been based on certain criterion. These criterions have been used in preparing the EIR for the project. In order to insure that development occurs within the limits of these design factors, each project must submit a calculation showing how it will utilize its entitlement. This calculation shall consist of a baseline of water, sewer, and traffic entitlement using the factors in paragraph 4.1.2.2A of this plan. A second calculation shall indicate the water and sewer utilization based on the specific uses proposed by the developer.

   Traffic generation consistency shall be judged using the City's traffic model. The Public Works Department will, at Proponent's expense, run the traffic model with Development Plan uses substituted for Specific Plan designations.

   No Preliminary Development Plan will be approved with traffic or other infrastructure demand projected to exceed the EIR limits. In determining conformity with the EIR limits the City may allow an individual property to exceed the defined threshold limits, so long as a finding is made that the Specific Plan maximum limits will not be exceeded. In the event that analysis shows that impacts will exceed these limits, supplemental environmental analysis may be required as described in paragraph 5.1.3.1 above.

5. Design Review - Design review of Final Development Plans shall be done by the Planning Commission and City Council. All plans shall conform to design guidelines approved in Chapter 4 of this Specific Plan.

Upon approval of the Final Development Plan, the Community Development Director may approve minor changes. Staff may recommend that minor modifications be recirculated through the review process (i.e. Planning Commission and City Council). All major modifications to the Final Development Plans must be recirculated through the review process.

### 5.1.2.3 Tentative Maps - Improvement Agreements

As Final Development Plans are being approved, all parcels proposing further subdivision must submit a tentative or vesting tentative map for approval as part of the final plan. All tentative maps must provide the information required by Title 12 of the Tracy Municipal Code.

If the Specific Plan requires certain improvements, and those improvements have been required during the Final Development Plan stage, the proposed subdivision must identify them on tentative maps or in improvement agreements.

Vesting tentative maps may be submitted in place of a tentative map. Vesting tentative maps must provide the same information required for tentative maps. Vesting tentative maps allow the development to proceed in compliance with the local ordinances, policies and standards in effect at the time the application for approval of the vesting tentative map is deemed complete. Because these vested rights can be in effect up to two years beyond the recording of the final map, the vesting tentative map offers developers an additional degree of certainty in the development process.

Following approval of the tentative map and prior to approval of a final subdivision map, the subdivider is required to enter into an improvement agreement with the City and post the necessary performance bonds to guarantee that public improvements will be constructed as identified on the tentative map. Plans for streets, curbs and sidewalks, drainage facilities, sewer system connections, water facilities, and other miscellaneous improvements shall be consistent with the Specific Plan and other City-specified details.

Prior to expiration of the tentative map, a final map should be submitted to the Department of Public Works. This map must be prepared by either a registered civil engineer or licensed land surveyor and must conform with the tentative map as it was approved or conditionally approved. The form and contents of the final map must conform to the requirements of Title 12 of the Tracy Municipal Code.

#### 5.1.2.4 Building and Occupancy Permits

Following approval by the Architectural Design Review Board, a development proposal may apply for building permits through the Building Division of the Community Development Department. All structures must comply with the Uniform Building Code and must incorporate any and all conditions identified in the design review approval process. Before a building permit shall be issued for any building or structure, the building official shall determine that the proposed building location, facilities and improvements are in conformity with the approved final map and its specified conditions. Before a building may be occupied, the building official shall certify that the site has been developed in conformity with the final map and that the building has been constructed in conformance with any conditions identified by the Planning Commission or City Council.

### 5.1.3 Amending the Specific Plan

The Specific Plan may be amended by resolution of the City Council, as frequently as deemed necessary by the City, following a public hearing. Amendments must, however, be found consistent with the General Plan.

If any section, subsection, clause, phrase or portion of the I-205 Specific Plan is, for any reason, held to be invalid by the decision of any court of competent jurisdiction, such decision shall not affect the validity of the remaining portions of this plan.

## 5.2 Capital Improvement Program

Numerous capital improvements are necessary to adequately serve the development in the I-205 Plan Area. Roadways, water and sewage treatment and conveyance systems and public services, including schools and parks will be increased in capacity or developed for the first time as a result of implementation of the Specific Plan.

Each fiscal year, the City of Tracy adopts a new Capital Improvements Program (CIP). The CIP includes projects related to and funded by the I-205 Specific Plan properties. The capital improvement costs and phasing are updated each year. The I-205 Specific Plan includes projects in the following CIP categories:

| Group | CIP Title |
|---|---|
| 71 | General Government and Public Safety Facilities |
| 72 | Traffic Safety |
| 73 | Streets and Highways |
| 74 | Wastewater Improvement |
| 75 | Water Improvements |
| 76 | Drainage Improvements |
| 78 | Parks and Recreation Improvements |
| 79 | Miscellaneous Projects |

## 5.3 Specific Plan Financing

### 5.3.1 Financing Methods Available

A variety of methods are available for financing capital projects such as those needed to develop the Specific Plan area. The range of financing methods available includes:

- Pay-as-you-go financing;
- General obligation bonds;
- Lease financing;
- Mello-Roos community facilities district financing;
- Assessment district financing;
- Redevelopment tax increment financing;
- Certificates of participation;
- Development impact fees;
- Utility expansion infrastructure financing; and
- Revenue bonds.

It is the intent that funding for the Specific Plan area improvements be generated by the Specific Plan area financing, rather than requiring the contribution of the City's general fund.

### 5.3.2 Financing Methods Used

#### 5.3.2.1 Cost Allocations

The properties within the I-205 Corridor Specific Plan require numerous street, utility and other City services in order to adequately serve and develop their properties. After analyzing the various requirements for service to the I-205 Corridor Specific Plan properties, it was determined that the following facilities were needed by a number of the properties and that the cost of these facilities should be shared by those properties, with the costs allocated on the basis of benefit that each facility provided to each property. Those facilities are: roadway "thoroughfare," intersections and signals, sanitary sewer treatment and collection, water distribution, water supply, water treatment and storage, storm drainage, City entry marker, parks, fire/public works capital improvements, public buildings improvements, and fees for mitigating the impacts for I-205 Plan area developments on air quality, Swainson Hawk mitigation, park and ride facility, downtown assistance, and conversion of agricultural land.

In addition to the shared cost listed above, there are also individual improvement costs and fee responsibilities particular to each individual property which are normally payable to the City prior to recordation of a final subdivision map or building permit. The original analysis of sharing of roadway costs included collector and local streets as well as arterial "thoroughfare" roadways. However, during the ensuing studies it became necessary to reduce the requirement for roadway financing through assessment districts to arterial "thoroughfare" roadways only, which were the roadways from which all properties would benefit. Local collector streets remained a requirement of each individual property to be financed privately, not with public financing.

Under the Tracy Municipal Code, all property owners are required to dedicate and improve their "frontage" which is defined as 32 feet of paving from the face of curb towards the street pavement, plus all property behind the face of curb to the ultimate right of way line (including curb, gutter, landscaping and fire hydrants). The fronting property owners are

also required to pay for the cost of installation of street lights in the medians. However, the remaining "thoroughfare" portion of the roadway is for the use and benefit of all properties in the area and therefore "thoroughfare" costs have been included and allocated as part of the program financing requirements.

The "thoroughfare" portion of the roadway is that center portion of roadways designated within the I-205 Corridor Specific Plan which exceed 64 feet in width from curb face to opposing curb face. The "thoroughfare" improvements include the rights of way acquisition, if needed, and improvements of pavement within this section of the street including landscaping of medians.

Infrastructure development of additional roads, sewers, storm and water lines not listed in the I-205 Specific Plan Capital Improvement Program, but either shown on the specific plan infrastructure plans or needed for development of a particular property, will be the responsibility of that individual property. Construction of such improvements will be triggered at the time of development of that fronting or adjacent property which will be served from that infrastructure. The ultimate responsibility of the property. However, the property will be required to develop additional infrastructure beyond that property to make that project functional. The developer will be responsible for preparation of precise plan lines, engineering designs, cost estimates, share the cost of responsibilities between other developers, improvement plans, right-of-way plats, easements, etc. as required on their property and property of others to install the required infrastructure. The developer may request reimbursement from the properties for improvements in excess of his responsibilities via a benefit in accordance with the City's policies.

#### 5.3.2.2 History of District Formations

With regard to the shared costs for the improvements and fees listed above, beginning in 1989, the City attempted to establish a Master Community Facilities District CFD 91-1 (Mello-Roos). After two years of preparing and analyzing various cost allocations to the various properties, it became evident that the various developers and their proposed development schedules were so diverse that the formation of one single financing district for all the properties would not be possible. It was evident at this time that a number of small Community Facilities Districts or Assessment Districts could be used and would be necessary to finance these improvements in accordance with the various time schedules

of the properties within the Plan area. However, the design of the major arterial roadways would need to proceed in order to have those roadway designs completed and ready for construction before development occurred. CFD 91-1 became the financing vehicle for the design of the major arterial roadways required by the I-205 Corridor property developments. These roadways consisted of Corral Hollow Road (between Byron Road and the Grant Line Road), Grant Line Road (between Naglee Road and Corral Hollow Road), and Naglee Road (between Grant Line Road and Street "C" east/west.)

#### 5.3.2.3 Finance Plans

The calculations of the cost allocation for the shared improvements described above were performed by Nystrom Engineering beginning in 1989. The properties and their land uses were considered in the original cost allocations were all of the properties and land uses shown in Chapter 3 of the original Specific Plan. During the first several years after 1989, various updates and refinements were made to those cost allocation calculations to the point where the City representatives and property owners agreed that the costs had been allocated on an equitable basis. It was also acknowledged that, although there would undoubtedly be future land use revisions and implementations which could vary from the land uses specified in the original Specific Plan (and used in the cost allocation calculations), for the sake of continuity, it was necessary to fix each property's cost allocation at the agreed-to amounts, based on the original Specific Plan land uses and configurations. It was acknowledged that any future adjustments for revisions to land uses or parcel configurations could have resulted in adjustments of the cost allocations to all Specific Plan properties. Any such changes could not occur because some parcels cost allocations were already fixed. Therefore, it was determined that all properties in the I-205 Specific Plan area, including those which have already developed and those which are yet to develop, would have their cost allocated on the original Specific Plan property configurations and land uses. For the past several years, since the time of fixing the cost allocations to all properties, updating of the costs of various facilities has occurred as cost estimates are updated, which has occurred approximately once each year. Beginning in 1989 with the first Financing District (CFD 89-1) for the MacArthur Drive industrial area, properties were required to finance improvements and pay development impact fees prior to recordation of a final subdivision map. Additional fees were also required to be paid at building permit issuance. This combination became known as a "Finance Plan." Each development is required, by conditions in the Development Agreement to have City Council approved Finance Plans. At the time that the City Council approves a development's "Finance Plan" that property's share of the allocated costs

are "fixed" and no longer subject to annual adjustments or updating unless provided for in the Finance Plan. To date (1997), Finance Plans have been approved for the following properties:

M3 and M4 as part of the MacArthur Drive industrial area (CFD 89-1);

Arterial roadway design (CFD 91-1);

Seecon residential development (AD 93-1);

Chatfield (GL-2A), Robertson (GL-3A) Yee (GL-4) commercial development (AD 94-1);

McBail (GL-25A) residential development (AD 95-1);

Surland (GL-24A) residential development (AD 96-1) and

Park Atherton (GL-23A) residential development (AD 97-1).

#### 5.3.2.4 Redevelopment Tax Income and Financing

During the 1989 analysis of the allocation of shared costs to the various I-205 Specific Plan properties, it was envisioned that the I-205 properties would pay for a portion of the I-205 and Grant Line Road freeway interchange costs. The remainder of these costs were to be paid from redevelopment agency tax increment financing. During the evolution of the studies of these shared costs, beginning in 1989, it became evident that the costs of the freeway interchange were to benefit a larger area of northwest Tracy than merely the I-205 properties. Even though all the original documents stated that a portion of the interchange financing would come from the I-205 properties, no fees were levied. In 1990, the City Redevelopment Agency agreed to finance the entire cost of the I-205 and Grant Line Road interchange improvements via tax increment and sales tax financing.

#### 5.3.2.5 Assessment Districts

An assessment district is a financing tool only, rather than a separate political agency or authority. All construction done with assessment financing must be public works construction. The costs of the improvements are spread to the benefited properties within the district. A variety of improvements can be financed, such as water, sewer, drainage and flood control, streets, sidewalks, and lighting. The costs must be spread in proportion to the benefit each property receives from the improvements. Assessments may be paid in cash by the property owners, or bonds can be sold which are secured by the assessments.

### 5.3.2.6 Certificates of Participation

During the period of negotiations between Tracy Mall partners (General Growth) and the City, several methods of financing of the Mall's improvement requirements were explored. These studies resulted in the Mall's contributing a lump sum payment for their share of the sanitary sewer and water utility costs in addition to mitigation costs for downtown assistance, Swainson Hawk, air quality and agricultural conversion. The remaining facilities were financed through the issuance of Certificates of Participation to be repaid from sales tax revenue generated by the Mall.

### 5.3.2.7 Community Facilities Districts

The Mello-Roos Community Facilities Act of 1982 (Government Code 53311-53365) provides an alternative method for financing a broad range of public facilities. Like an assessment district, a community facilities district is strictly a financing vehicle, not a separate political entity. Mello-Roos financing can be used to provide any kind of facilities with a useful life of five years or more, which the County is authorized to construct, own, or operate, and which are needed because of development. Mello-Roos bonds can also be issued by a joint powers authority created for that purpose.

Mello-Roos financing can be used to finance a variety of facilities including:

- Local park, recreation, or parkway facilities;
- Elementary and secondary school sites and structures;
- Libraries;
- Natural gas, telephone, or electrical facilities for new areas, even if owned by a regulated public utility; and
- Any other governmental facilities, which the City is, authorized by law to construct, own, or operate.

### 5.3.2.8 Hansen Sanitary Sewer Project

The sanitary sewer outfall collection main to serve the Grant Line plan area properties also serves other properties to the south in the Patterson Pass area. Prior to the need for this facility by the I-205 properties, the Safeway/King & Lyon developers required this outfall line to be built. This line was built by funding from the Safeway/King & Lyon and the City's Sewer Enterprise Fund. All future properties using this line will reimburse the City's Sewer Enterprise Fund, for their share of the costs of this line. The I-205 plan share of the Hansen Sewer line costs is a line item in the cost allocation spread sheets discussed above.

### 5.3.3 Sources of Annual Revenue

As discussed above, a variety of methods are available to raise the capital funds necessary for construction of public improvements in the Specific Plan area. Once the funds are borrowed, there must be a source of annual revenue to pay debt service.

#### 5.3.3.1 Assessment Liens

The most appropriate forms of capital financing, assessment financing and Mello-Roos financing, incorporate in their creation their basic method of repayment. The confirmation and recording of an assessment lien against a property is accompanied by the establishment of the assessment installments of principal and interest to pay off the assessment. The assessment installments are added to the property tax bill each year for as long as the assessment is outstanding. The property owner has the right to prepay the balance of the assessment at any time, with the payment of interest and prepayment premium as determined by law.

Mello-Roos bonds are secured by a Special Tax, up to a level approved by the voters at the time the financing is authorized. The tax may not be based on property value, but can vary for different uses and development stages of the property.

#### 5.3.3.2 Development Impact Fees

A development impact fee is a one-time fee on new construction levied at the time development takes place. It is designed to recapture in part the costs which have been incurred in advance of development in order to make it possible for the property to develop. This is particularly the case in the I-205 Corridor Specific Plan area where a significant expense must be met simultaneous with large scale retail development. The intent is to prevent new development from draining the resources of the City, for new development purposes at the expense of the maintenance and improvement of existing facilities.

### 5.3.4 The Financing Concept

The primary resources or revenue components of the financing program include the use of Mello-Roos Community Facility Districts and Special Benefit Assessment Districts (the "Infrastructure Financings",) to be supplemented by a limited pledge of redevelopment tax increment funds and a limited sales tax revenue allocation. In addition to these financing sources, there are a number of individual property development requirements and fees, which are levied on each property prior to recordation of a final subdivision map or building permit issuance.

These financial resources were adequate to commence infrastructure construction in 1989, with full funding and relative completion anticipated at the end of the decade. As development occurs, financial resources have been available when the improvements are needed for Specific Plan implementation.

### 5.3.5 The Financing Program

The program is composed of various discreet components that, when combined, can fund all of the necessary improvements.

#### 5.3.5.1 Sewer and Water System Infrastructure Financing

In the near future, depending on overall City sewer and water system utilization, the City will need to construct additional sewer utility treatment capacity and provide for the water utility resource (the "Utility Expansion".) These utility expansion needs will come primarily from development within the Specific Plan area. The City must be assured that adequate funding will be available for this utility expansion, but the actual funding dollars are not expected to be needed, except for initial design work, until the projected demand exceeds the projected interim utility capacity.

A Utility Expansion Financing Program is being created within the Specific Plan area as part of the formation of the series of Assessment Districts described above.

#### 5.3.5.2 I-205 Freeway Interchange Financing

These improvements, through needed for the full development of the Specific Plan, will also provide substantial benefit to the entire community of Tracy. The Program provides for three phases of construction of the I-205 Freeway Interchange Improvements (the "Freeway Improvements"), based on actual traffic generation within the Specific Plan. The first phase is anticipated to be approximately 55% of the total need with the remainder being Phases 2 & 3.

Phase 1 improvements were financed via a redevelopment tax allocation bond financing, supported by tax increments of the recently formed Tracy Community Development Project. This financing was completed to provide total project construction for Phase 1 Freeway Improvements in 1991 and 1992.

Phase 2 will not be required until substantial development occurs within the Specific Plan area. Initial retail development within the Specific Plan area will generate very substantial increased sales tax revenues for the City. A portion of these revenues, via either a redevelopment tax increment bond financing or City certificate of participation (secured by a pledge of new sales tax), or revenue financing, can be utilized as bond debt security for the financing of Phase 2 and 3 Freeway Improvements.

The basic debt financing security of the sales tax revenues pledge is to be bolstered by a contingent Mello-Roos Community Facilities District (CFD) Special Tax applied only to the properties within the Specific Plan area. The precise Special Tax formulation will be subject to property owner negotiations, the intent being to gradually phase out the City contribution of sales tax. This Special Tax will also be structured to provide the City and Community Development Agency (the "Agency") with reasonable assurance that, should sales tax revenues decrease for some unforseen and

unpredictable reason, the Special Tax will be able to assume debt service responsibility, hence avoiding an adverse impact on the General Fund of the City or other unrelated Agency programs. This supplemental Special Tax will be a component of the Utility Capacity Infrastructure Financing CFD Special Tax.

#### 5.3.5.3 Project Specific Infrastructure Financing

As discussed above, project specific costs are those costs which relate to each individual property separately, rather than on a cost sharing basis with other properties. These costs are established in each property's Finance Plan to be payable prior to recordation of final subdivision map or the issuance of a building permit.

Project Specific Infrastructure Financing will be included in each property's Finance Plan to provide for the more localized roadway, storm drainage and other infrastructure improvements necessitated by the development of each property parcel.

These Project Specific Infrastructure Financings will be undertaken as the development of each property is to commence. The Program will be structured so that each Project Specific Infrastructure Financing can stand on its own and is not dependent on the other properties. Limited use of reimbursement agreements may be appropriate to provide for the reasonable phasing of all Improvements.

### 5.3.6 Summary

This Financing Program is feasible and meets traditional municipal bond underwriting requirements. The nature of the Financing Program provides two key benefits:

1. Each of the properties can develop independently, and

2. Assurance to the City that development will provide required infrastructure.

The City and Agency contribution of tax increments and sales tax adds to the basic feasibility of the Program by augmenting private resources in the initial years when private resources are most constrained. This limited public contribution is a key factor in the overall Program feasibility.

This Program will provide for private development that meets the quality standards established by the City of Tracy in a financially effective and feasible manner.

# APPENDIX A

## I-205 Specific Plan

## Permitted and Conditionally Permitted Land Uses

### I. Permitted and Conditionally Permitted Residential Uses

Table A-1 indicates uses permitted under each residential land use designation of the Tracy General Plan. Is also lists permitted uses which are subject to the granting of a use permit. The land use designations are defined in Chapter 3 of this document. Abbreviations used in the Table are as follows:

| Land Use Designation | Abbreviation |
|---|---|
| Low Density Residential | LDR |
| Medium Density Residential | MDR |
| High Density Residential | HDR |

The uses shown in Table A-1 as Permitted ("P") are those which are deemed acceptable anywhere in the land use designation to which they are assigned. They are uses that, when developed in conformance with this Plan, will not require special conditions in order to avoid negative impacts.

On the other hand, the uses shown as Conditionally Permitted, ("C") are of two types. Some of these uses are not acceptable in every location within a land use, but are acceptable at particular locations. Other uses may require special conditions to make them acceptable at particular locations, due to their potential negative impacts on existing or planned uses. This may be because of their potential high traffic volumes or their potential nuisance aspects such as litter, light glare, or noise.

Where neither a "P" or a "C" is shown for use in a district that use is not allowed. Implementation of the Conditionally Permitted uses is described in Chapter 5 of the Plan.

## TABLE A-1

### Permitted and Conditional Residential Uses

| | LDR | MDR | HDR |
|---|---|---|---|
| Accessory uses and structures located on the same site as the permitted use | P | P | P |
| Agriculture | P | P | P |
| Attached single-family dwellings including zero-lot-line, townhomes, duets, cluster and similar residential designs planned as a single project | | P | P |
| Board and care facilities | C | C | C |
| Boarding and rooming houses | | C | C |
| Churches and church-related uses | C | C | C |
| Educational, cultural, institutional, and recreational uses | C | C | C |
| Hospitals, convalescent hospitals, rest and nursing homes | C | C | C |
| Hydrocarbon resources extraction | C | C | C |
| Mobile home parks and mobile home park subdivisions | C | C | C |
| Mortuaries | C | C | C |
| Multiple-family dwellings, including condominiums, co-ops and apartment houses | | P | P |
| One-family dwelling | P | P | P |
| Private schools, nursery schools, day care centers | C | P | P |
| Public parks, building, schools | P | P | P |
| Secondary residential units | C | | |

## II. Permitted and Conditionally Permitted Commercial and Industrial Uses

Table A-2 indicated which uses are to be permitted and permitted subject to conditions in each land use designation of the Plan. The land use designations are defined in Chapter 3 of the Plan and the abbreviations used in the Table are as follows:

| Land Use Designation | Abbreviation |
|---|---|
| Commercial Center | CC |
| General Commercial | GC |
| Service Commercial | SC |
| Freeway Commercial | FC |
| Light Industrial | LI |

The uses shown in Table A-2 as Permitted ("P") are those which are deemed acceptable anywhere in the land use designation to which they are assigned. They are uses that, when developed in conformance with this Plan, will not require special conditions in order to avoid negative impacts.

On the other hand, the uses shown as Conditionally Permitted, ("C") are of two types. Some of these uses are not acceptable in every location within a land use, but are acceptable in certain locations. Other uses may require special conditions to make them acceptable at particular locations, due to their potential negative impacts on existing or planned uses. This may because of their potential high traffic volumes or their potential nuisance aspects such as litter, light glare, noise or hazardous wastes.

Where neither a "P" or a "C" is shown for use in a district that use is not allowed. Implementation of the Conditionally Permitted uses is described in Chapter 5 of the Plan.

INTENTIONALLY LEFT BLANK. SEE NEXT PAGE

## TABLE A-2

## PERMITTED AND CONDITIONAL COMMERCIAL AND INDUSTRIAL USES

| | CC | GC | SC | FC | LI |
|---|---|---|---|---|---|
| Accessory uses and structures; not including warehouses, located on the same site as a permitted use | P | P | P | P | P |
| Accessory uses and structures located on the same site as a conditional use | | C | C | C | C |
| Agriculture | P | P | P | P | P |
| Ambulance services | | | P | | C |
| Amusement parks | | | C | | |
| Antique art and antique book sales | P | | | | |
| Antique art and book restoration | | | C | | C |
| Appliance sales and repair, provided repair services shall be incidental to retail sales | P | P | P | | |
| Appliance repair, not incidental to sales | | | P | | P |
| Art galleries and artists' supply store | P | P | | | |
| Athletic clubs | P | C | C | | C |
| Auction rooms | | | C | | C |
| Auto center 1 | | C | C | | |
| Automobile rental leasing; no service | P | P | P | C | |
| Automobile repairing, overhauling | | | P | | P |
| Automobile painting and body work | | | C | | P |
| Automobile sales and service including new and used car sales | | C | C | C | |
| Automobile supply stores | P | P | P | | |
| Automobile upholstery and top shops | | | P | | C |
| Automobile washing, including use of mechanical conveyors, blowers and steam cleaners | C | C | P | P | |
| Automobile washing, self-service | | | C | | |
| Barbershops, beauty shops & hairstylists | P | P | | | |
| Bars without significant food service | C | C | | C | |
| Bicycle shops | P | P | | | |
| Blacksmiths shops, not less than 300 feet from residential district | | | C | | C |
| Boat sales, service and repair | | | C | | C |
| Bookbinding | | C | P | | C |
| Bookstores | P | | | | |
| | | | | | |

| | CC | GC | SC | FC | LI |
|---|---|---|---|---|---|
| Bottling works | | | P | | P |
| Bowling alleys | P | C | P | | |
| Building materials sales (outside storage) | | | P | | P |
| Building materials sales (no outside storage) | C | C | P | | |
| Cabinet and door sales | | | P | | C |
| Candy stores | P | P | | C | |
| Carpet, drapery and floor-covering stores | P | P | P | | C |
| Carpet, rug cleaning and dyeing | | | P | | P |
| Catalog stores | P | P | | | |
| Catering establishments | | | P | | P |
| Catering establishments in conjunction with restaurant | P | P | C | P | C |
| Charitable institutions and operations, including but not limited to lodging, housing or dormitories providing temporary quarters for transient persons, organizations devoted to collecting or salvaging new or used materials, or organizations devoted principally to distributing food, clothing and other supplies on a charitable basis and other similar charitable operations | | C | C | | |
| Child care centers | P | P | C | | P |
| Christmas tree sales lots seasonal 2 | TUP | TUP | TUP | | |
| Churches, parsonages, parish house, monasteries, convents and other religious institutions | | C | | | |
| Circuses, carnivals and other transient amusement enterprises 2 | TUP | TUP | TUP | | |
| Clothing and costume rental establishments | P | P | P | | |
| Clothing, shoe and accessory under 3,000 square feet | P | C | | | |
| Clothing, shoe and accessory over 3,000 square feet | P | P | | | |
| Columbariums and crematories | | | C | | C |
| Consumer opinion and research center | P | P | | | |
| Copying and related duplicating services not including printing, lithographing, engraving or such similar reproduction services | P | P | P | P | P |
| Cultural, education and recreational facilities (public) | P | P | C | P | |
| Cutlery shop (retail) | P | P | | | |
| Dairy products plants | | | C | | C |
| Dairy products manufacturing for retail sale on premise only | | C | C | | C |
| Dance studios | P | P | C | | |
| Delicatessen stores | P | P | P | P | C |
| Department stores | P | P | | | |
| Department stores tire, battery and accessory shops | P | P | | | |

| | CC | GC | SC | FC | LI |
|---|---|---|---|---|---|
| Diaper supply services | | | P | | P |
| Drive-in theaters | | | C | | |
| Drug stores and prescription pharmacies | P | P | | | |
| Electrical equipment repair and electricians' shops | | | P | | C |
| Feed and fuel stores | | C | C | | |
| Financial institution, including banks, savings and loan offices, finance companies, credit unions and related service; under 4,000 square feet | P | P | C | | |
| Florists and plant shops | P | P | | | |
| Food lockers | | | P | | C |
| Food markets, convenience markets and specialty stores (excluding supermarkets over 30,000 square feet) | P | C | | C | |
| Freight forwarding terminals | | | C | | P |
| Furniture stores | P | P | | P | |
| Furniture upholstery shops | | C | C | | C |
| Games arcades | P | C | | | |
| Garden centers, including plant nurseries | | P | P | | |
| Garden centers, retail excluding growing areas | P | P | P | | |
| Gift shop | P | P | | P | |
| Glass replacement and repair shop | | | P | | P |
| Guards' living quarters | | | C | | C |
| Gunsmiths | | P | C | | |
| Gymnasiums and health clubs | P | C | P | | C |
| Hardware stores including garden centers | P | P | P | | |
| Heating and air conditioning shops | | | C | | P |
| Hobby shops | P | P | | | |
| Hospital equipment, sales and rental | P | C | P | | C |
| Hotels and motels | C | P | | P | |
| Household repair shops | | C | P | | |
| Hydrocarbon resource extraction | C | C | C | C | C |
| Ice cream sales | P | P | | P | |
| Ice house (wholesale) | | | | | C |
| Ice vending stations (retail) | | C | C | C | |
| Interior decorating shops | P | P | | | |
| Janitorial services and supplies | | | P | | P |
| | | | | | |

| | CC | GC | SC | FC | LI |
|---|---|---|---|---|---|
| Jewelry stores | P | P | | | |
| Kennels and other boarding facilities for small animals not less than 300 feet from a residential district | | | C | | C |
| Kennels when associated with pet shops which comply with the specifications for sound-proofing construction consistent with the general plan nose standards as determined by the Chief Building Officials | P | | | | |
| Laboratories | | | C | | C |
| Laundry plants, bulk | | | C | | P |
| Laundries and dry cleaners where service is provided | P | P | P | P | P |
| Laundries, self-service | | P | | | |
| Leather goods and luggage stores | P | P | | | |
| Linen supply services | | | P | | C |
| Liquor stores | C | P | | C | |
| Locksmiths | P | P | P | | |
| Lumber yards | | | P | | P |
| Machinery sales | | | P | | C |
| Massage studios | | C | | | |
| Manufacturing, light, excluding the storage, use or generation of hazardous materials or substances 3 | | | | | P |
| Manufacturing, light with storage, use of generation of hazardous materials or substances 3 | | | | | C |
| Manufacturing, intermediate 4 | | | | | C |
| Medical and orthopedic appliance stores | P | P | P | | |
| Meeting halls | P | C | C | | |
| Mini storage | | | P | | P |
| Miniature golf | P | C | C | | |
| Motorcycle sales, no service or repair | P | P | P | P | |
| Motorcycle sales and service | | C | P | C | |
| Mortuaries | | C | P | | |
| Music stores (instruments and sheet music) | P | P | | | |
| Music and dance studios | P | P | C | | |
| Nail parlor | P | P | | | |
| Newsstands | P | P | P | P | |
| Nursery with outdoor plants storage and sale | | C | P | | |
| Office supply and business machine stores | P | P | C | | |
| | | | | | |

| | CC | GC | SC | FC | LI |
|---|---|---|---|---|---|
| Offices, including but not limited to business, professional, medical and administrative offices | P | P | C | C | C |
| Outdoor art and craft shows | TUP | | | | |
| Outlet stores and centers | P | C | C | C | C |
| Paint, glass and wallpaper shops (retail) | P | P | P | | P |
| Paint, glass and wallpaper shops (wholesale) | | | P | | P |
| Packing mailing, wrapping and handling | P | P | P | | |
| Parcel delivery services including garage facilities for trucks, and repair shops facilities | | | C | | P |
| Parking facilities, including required off-street parking facilities located on a site separated from the uses which the facilities serve and fee parking | | P | C | C | |
| Park and ride | C | C | C | C | C |
| Pest control shops | | C | P | | |
| Pet and bird stores with incidental veterinary service | P | P | | | |
| Photographic studios | P | P | | | |
| Photographic supply stores | P | P | | | |
| Picture framing shops | P | P | | | |
| Plumbing, heating and ventilating equipment showrooms with storage of floor samples only | | P | P | | P |
| Plumbing, heating and ventilating equipment showrooms with storage of floor samples only (wholesale) | | | | | P |
| Processing plants | | | | | C |
| Plumbing shops | | | P | | P |
| Prefabricated structure sales | | | C | | C |
| Printing, including also lithographing and engraving and other reproduction services | | C | P | | P |
| Private clubs and lodges | | C | C | | |
| Private museums | | C | C | | |
| Public utility and public service pumping stations, equipment buildings and installations, drainage ways an structures, reservoirs, percolating basins, well fields, storage tanks and transmission lines | P | P | P | P | P |
| Radio and television broadcasting studios | P | P | P | | C |
| Record and recording and sound equipment stores | P | P | | | |
| Recording studios | | | P | | C |
| Recreation and sport facilities, indoor | P | C | C | | C |
| Recreational vehicle storage | | | C | | C |
| Recreation and sports facilities, outdoor | C | | C | | C |
| | | | | | |

| | CC | GC | SC | FC | LI |
|---|---|---|---|---|---|
| Refrigeration equipment sales | | | P | | P |
| Rental yards, including the rental of hand tools, garden tools, power tools, trucks and trailers and other similar equipment | | | P | | C |
| Recycling (collecting and sorting) | C | C | C | C | C |
| Research and development excluding the storage, use or generation of hazardous materials or substances | | | C | | P |
| Research and development with storage, use or generation of hazardous materials or substances | | | | | C |
| Residential uses | | | | | |
| Restaurant and soda fountains not including drive-ins or take out food establishments | P | P | C | P | C |
| Restaurants and soda fountains including take out, drive-ins, and drive through windows (fast food) | P | C | C | C | |
| Restaurants with full bar | C | C | | C | |
| Reverse vending machines | P | P | P | P | P |
| Saddleries | | C | P | | |
| Scientific instrument shops | P | P | P | | |
| Second hand stores and pawnshops | | C | C | | |
| Service stations not less than 60 feet from a residential district, not including trailer rental, provided all operations except the sale of gasoline and oil and the washing of cars shall be conducted within an enclosed building and provided that he minimum site area shall be 20,000 square feet. Sales shall be limited to petroleum products and automotive, accessories and tobacco, soft drinks, candy and gum | C | C | C | C | C |
| Service stations not less than 60 feet from a residential district, including truck and trailer rental, provided all operations except the sale of gasoline and oil and rental storage shall be conducted within a building enclosed on at least three sides and provided that the minimum site area shall be 20,000 square feet. Sales shall be limited to petroleum products and automotive accessories, food and beverages (except alcoholic beverages) and small consumer items such as magazines, newspapers, etc... | | | C | C | C |
| Sheet metal shops | | | C | | P |
| Shoe repair shops | P | P | P | | |
| Shooting galleries, indoors | | C | P | | |
| Sign painting shops | | | P | | P |
| Skating rinks, indoors | P | C | C | | |
| Specialty stores selling those items and services normally sold in department stores (excluding clothing, shoes and accessories) | P | P | | | |
| Sporting good stores | P | P | | | |
| Stamp and coin stores | P | P | | | |
| Stationery stores | P | P | | | |
| Stone and monument yards | | | P | | P |
| | | | | | |

| | CC | GC | SC | FC | LI |
|---|---|---|---|---|---|
| Storage yards for commercial goods, supplies and equipment including fuel storage, no less than 300 feet from any residential district | | | C | | C |
| Supermarket | C | C | | | |
| Swimming pool sales and supplies, and/or service | | C | P | | |
| Swimming pool sales and supplies, no service | P | P | P | | |
| Tailor or dressmaking shops | P | P | | | |
| Taxidermists | | C | C | | |
| Television and radio sales and repair shops | P | P | | | |
| Theaters and auditoriums | P | | | | |
| Tire sales and service, not including retreading and recapping or mounting or heavy duty truck tires | | | P | | |
| Tires, batteries and accessories, sales and services | P | C | P | | |
| Tobacco stores | P | P | | | |
| Tools and cutlery sharpening or grinding | | C | P | | |
| Toy stores | P | P | | | |
| Trade, business, vocational, music and art schools, and training centers, but not including general purpose or child care centers | C | C | C | | |
| Truck, tailer and/or R.V.s sales and service | | C | C | | |
| Truck sales | | | | C | C |
| Trucking terminals, not less that 150 feet from a residential district | | | C | | C |
| Variety stores | P | P | | | |
| Vending machine sales and service | | | P | | |
| Veterinarians' office and small animals hospitals, including short-term boarding of animals and incidental care such as bathing and trimmings provided all operations are conducted entirely within a completely enclosed building which complies with specifications for soundproof construction which shall be consistent with general plan noise standards as determined by the Chief Building Official | | C | P | | |
| Veterinarians' offices and large animal hospitals including operations not conducted within an entirely enclosed building, not less that 600 feet from a residential district | | | C | | C |
| Video stores (sales and rental) | P | P | | P | |
| Warehouses and distributors including the storage of fuel or flammable liquids | | | | | C |
| Warehouses and distributors without flammables or fuels | | | C | | P |
| Watch and clock repair shops | P | P | P | | |
| Wholesale establishments | | | P | | P |
| Warehouse retail including furniture, office supply, sporting goods or wholesale merchandising | | C | P | C | |

Notes to Table A-2:

1. Auto Center may include any of the following uses related to automobiles and trucks:

   (a) Sales and service;
   (b) Washing, waxing or detailing;
   (c) Rental or leasing.

   In addition, service stations and automobile or boat supply stores.

2. TUP = Temporary Use Permit

3. As defined by State Law, any business using significant quantities of hazardous materials requires Condition Use Permit.

4. Light Manufacturing includes the following uses subject to performance standards controlling dangerous or objectionable elements:

   (a) Assembly of electrical appliances, electronic instruments and devices, radios, and phonographs, including the manufacture of small parts only, such as coils, condensers, transformers, and crystal holders;

   (b) Laboratories, experimental, photo, or motion picture, and research or testing;

   (c) Manufacturing, compounding, processing, packaging, or treatment of such products as candy, cosmetics, drugs, perfumes, pharmaceuticals, perfumed toilet soap, and toiletries, excluding the refining and rendering of fats and oils;

   (d) Manufacturing, compounding, assembling, or treatment of articles or merchandise from the following previously prepared materials; bone, cellophane, canvas, cloth, cork, feathers, felt, fibre, fur, glass, hair, horn, leather, paper, plastics, precious or semiprecious metals or stones, light sheet metal, shell, textiles, tobacco, wire, wood (excluding planning mills) yarns, and paint not employing a boiling process;

   (e) Manufacturing of pottery and figurines or other similar ceramics products, using only previously pulverized clay.

RESOLUTION 99-240

AMENDMENTS TO THE I-205 CORRIDOR SPECIFIC PLAN
INCLUDING THE LAND USE DESIGNATIONS IN THE GRANT LINE NORTH
PLANNING AREA; ALL PREVIOUSLY ADOPTED AMENDMENTS TO THE PLAN;
AMENDMENTS TO CHAPTER 4, SECTION 4.1.2.2, GENERAL COMMERCIAL
AND INDUSTRIAL STANDARDS, SUB-SECTIONS "B" BY DELETING
REQUIREMENTS OF A CONDITIONAL USE PERMIT FOR
AUTO DEALERS WHO LOCATE IN THE DESIGNATED AUTO PLAZA;
SUB-SECTION "G" SIGNS, BY PROVIDING FOR AN OFF PREMISE
FREEWAY SING FOR THE AUTO PLAZA; AND AMENDMENT TO CHAPTER 5
IN ITS ENTIRETY.
THE APPLICANT IS THE CITY OF TRACY
APPLICATION 1-99-SPA

WHEREAS, On August 21, 1990, the City Council of the City of Tracy adopted the I-205 Corridor Specific Plan ("Specific Plan") and certified an Environmental Impact Report (Resolution 90-326), and zoned the Specific Plan area Planned Unit Development (PUD), providing for a wide variety of land uses, and

WHEREAS, Several amendments to the Specific Plan have been adopted since the original Plan was adopted in 1990, mostly focusing on roadway issues, and

WHEREAS, Along with other new amendments, focusing primarily on roadways and the Auto Plaza are proposed, and

WHEREAS, Staff has prepared a comprehensive amendment package of the Specific Plan incorporating these previous and newly proposed amendments, and

WHEREAS, The proposed project, when combined with the mitigation measures listed in the Environmental Impact Report for the I-205 Corridor Specific Plan and the Initial Study and proposed Negative Declaration, will not result in any substantial environmental impacts, and

WHEREAS, The proposed amendments are consistent with the original intent and underlying policies of the Specific Plan as adopted and the Urban Management Plan's intended land uses within the Specific Plan area, and

Whereas, The proposed project is in substantial conformance with the goals, policies and objectives set forth in the Urban Management Plan and the I-205 Corridor Specific Plan and therefore, approval of the project will not be detrimental to the public health, safety, or general welfare, and

WHEREAS, The Planning Commission of the City of Tracy held a public hearing on the amendments to the I-205 Corridor Specific Plan, June 23, 1999 and recommended that the City Council approve the amendments I-205 Corridor Specific Plan;

NOW, THEREFORE, BE IT RESOLVED, That the City Council of the City of Tracy does hereby approve the Negative Declaration and the amendments to the I-205 Corridor Specific Plan, Application 1-99-SPA.

* * * * * * * * * * * * * *

The foregoing Resolution 99-240 was adopted by the City Council of the City of Tracy on the 6th day of July, 1999, by the following vote:

| | | |
|---|---|---|
| AYES: | COUNCIL MEMBERS: | IVES, MATTHEWS, TOLBERT, TUCKER |
| NOES: | COUNCIL MEMBERS: | NONE |
| ABSENT: | COUNCIL MEMBERS: | BILBREY |
| ABSTAIN: | COUNCIL MEMBERS: | NONE |

Barbara S. Matthews
Mayor Pro Tem

ATTEST:
Sharon Smith
City Clerk

RESOLUTION 2001-204

AMENDING MALL SIGNS AND THE PUD PRELIMINARY AND FINAL DEVELOPMENT PLAN FOR BARNES AND NOBLE - BENCHMARK ENGINEERING, INC. - APPLICATIONS 2-01-SPA & 15-01-D

WHEREAS, City Council adopted the I-205 Corridor Specific Plan and certified the project EIR on August 21, 1990, and

WHEREAS, City Council approved the West Valley Mall Planned Unit Development (PUD) Preliminary and Final Development Plan on June 7, 1994, and

WHEREAS, Benchmark Engineering, on behalf of Tracy Mall Partners, submitted the PUD Preliminary and Final Development Plan on April 4, 2001 and a Specific Plan Amendment application on April 27, 2001, and

WHEREAS, The Planning Commission conducted a public hearing to review the applications on May 23, 2001, and

WHEREAS, City Council conducted a public hearing to review the application on June 19, 2001;

NOW, THEREFORE, BE IT RESOLVED, That City Council approves the following I-205 Corridor Specific Plan Amendment and the Barnes and Noble PUD Preliminary and Final Development Plan based on the findings identified below and subject to conditions contained in Exhibits 1 and 2, attached a made a part hereof.

Section 4.1.2.4.C.4 of the I-205 Corridor Specific Plan is hereby amended to read as follows:

> In the mall complex, only major tenants shall have signs to be seen from the outside. Major mall tenants are designed as those occupying 25,000 or more square feet of gross leasable area. Smaller, mall corridor oriented tenants shall only have signs seen from inside the mall corridors. Mall tenants containing less than 25,000 square feet of gross leasable area and only having exterior entrances may have one (1) identification sign over the entrance. Height of the letter size shall not exceed eighteen inches (18").

Findings for I-205 Corridor Specific Plan Amendment:

In accordance with Tracy Municipal Code Section 10.20.170, in order to recommend approval of the Specific Plan Amendment, City Council must find that the amendment:

Is consistent with the goals, actions and policies of the Plan and with its purposes, standards and land use guidelines; will help to achieve a balanced community of all races, age groups, income levels and ways of life; results in development of desirable character which will be compatible with existing and proposed development in the surrounding neighborhood; contributes to a balance of land uses that will enable local residents to work and shop within the

Tracy Planning Area; respects the environmental and aesthetic assets of the community consistent with economic realities; and incorporates, where feasible, active and passive energy conservation measures.

The proposed amendment is a minor amendment with minimal impact on the build out of the Specific Plan. The amendment is consistent with the intent, goals, and purposes of the Specific Plan. The Amendment will enable Barnes and Noble, which is designed as a major mall tenant with its primary entrance from the outside of the mall, to have a sign on the outside of the building facing toward the parking area and visible from Naglee Road. The size of the sign is consistent with the scale of the nearby "West Valley Mall" and "JCPenney" signs, also on the exterior of the Mall. The resulting Barnes and Nobel sign will be a productive, aesthetically balanced, marketing and identification tool for Barnes and Noble as well as the entire West Valley Mall.

Findings for the PUD Preliminary and Final Development Plan:

1. The Barnes and Noble will conform to the requirements and the intent of the City of Tracy General Plan, Municipal Code, and I-205 Corridor Specific Plan. The location, design, and operation of the proposed book store and café is consistent with the General Plan designation of Commercial and the I-205 Corridor Specific Plan designation of Commercial Center in which the property is located. In addition, the project, as conditioned, will comply with each of the applicable provisions of TMC Chapter 10.08.

2. The Barnes and Noble, with project conditions, will not, be injurious or detrimental to health, safety, or general welfare of persons or property in the vicinity of the proposed project, or the general welfare of the City. The project, with conditions of approval, meets the requirements of the California Environmental Quality Act, the California Building Code, and all applicable provisions of the Tracy Municipal Code.

3. The project will not adversely affect or impair the benefits of occupancy, most appropriate development, property value stability, or the desirability of property in the vicinity. The project meets the City's parking requirements and is architecturally compatible with the existing Mall buildings and landscaping.

* * * * * * * * * * * * * * * * * *

The foregoing Resolution 2001-204 was passed and adopted by the Tracy City Council on the 19th day of June, 2001, by the following vote:

| | | |
|---|---|---|
| AYES: | COUNCIL MEMBERS: | HUFFMAN, IVES, TOLBERT, TUCKER, BILBREY |
| NOES: | COUNCIL MEMBERS: | NONE |
| ABSENT: | COUNCIL MEMBERS: | NONE |
| ABSTAIN: | COUNCIL MEMBERS: | NONE |

Dan Bilbrey
Mayor

ATTEST:

Sharon Smith
City Clerk

RESOLUTION 2001-250

AMENDING THE I-205 CORRIDOR SPECIFIC PLAN WITH REGARD
TO SIGNAGE REQUIREMENTS
APPLICATION 1-01-SPA

WHEREAS, City Council adopted the I-205 Corridor Specific Plan and Environmental Impact Report on August 21, 1990, and a subsequent Negative Declaration on July 6, 1999, and

WHEREAS, City Council adopted the West Valley Mall Planned Unit Development Preliminary and Final Development Plan on June 7, 1994, and

WHEREAS, Benchmark Engineering, Inc., on behalf of Tracy Mall Partners, submitted an application to amend the I-205 Corridor Specific Plan (Application 1-01-SPA) with regard to signage requirements, and

WHEREAS, The Planning Commission held a public hearing to review and consider the application on May 23, 2001 and June 13, 2001, and recommended that City Council deny the amendment, and

WHEREAS, City Council held a public hearing on June 19, 2001, to consider the amendment and continued the hearing to July 17, 2001, to allow for the development of appropriate language to amend the I-205 Corridor Specific Plan, and

WHEREAS, City Council held a public hearing on July 17, 2001, to consider the proposed amended language;

NOW, THEREFORE, BE IT RESOLVED, That City Council does hereby approve Application 1-01-SPA amending Section 4.1.2.2.G as follows:

Section 4.1.2.2.G.4 shall be amended to read "No building attached sign shall extend above the dominant roof line of the building, except where proposed upon a wall or parapet that extends above the dominant roof line and approved by the City Council as part of a project's preliminary and final development review application."

Section 4.1.2.2.G.10.ii shall be amended to read "On single tenant buildings, signs should be located immediately above or adjacent to the primary building entrance or door of a commercial establishment. The area of any single sign shall not exceed 100 square feet. Total sign area shall not exceed one-half square foot of sign per lineal foot of building frontage. However, a sign size of up to 250 square feet may be allowed upon approval of a Conditional Use Permit, which demonstrates that:

1. The building face on which the sign is proposed to be attached is a minimum of 500 feet from the public right-of-way from which it can be seen.

2. The building on which the sign is proposed to be attached is a minimum of 30,000 square feet in size.

3. The size of the sign is of an appropriate scale when compared to the building face on which it is proposed.

4. The total sign area for the building shall not exceed one square foot per lineal foot nor more than 75 percent of the building frontage. When 50 percent of the project signage is comprised of individual letters for which total signage shall not exceed 1.2 square feet per lineal foot of building frontage.

   On smaller, multi-tenant buildings, signs should be located on the frontage of each individual tenant. The area of any single sign shall not exceed 100 square feet nor more than 75 percent of the tenant frontage. Capital letters shall be no more than 2.5 feet high and lower case letters shall be no more than 1.5 feet in height. When individually lettered wall signs comprise over 50 percent of the tenant signage, the total sign area shall not exceed 1.2 square feet per lineal foot of tenant frontage. When comprising less than 50 percent of the tenant signage, the maximum sign area shall be one half square foot per lineal foot of business being served."

Findings:

1. The Specific Plan Amendment is consistent with the goals, actions and policies of the I-205 Corridor Specific Plan and with its purposes, standards and land use guidelines; will help to achieve a balanced community of all races, age groups, income levels and ways of life; results in development of desirable character which will be compatible with existing and proposed development in the surrounding neighborhood; contributes to a balance of land uses that will enable local residents to work and shop within the Tracy Planning Area; respects the environmental and aesthetic assets of the community consistent with economic realities; and incorporates, where feasible, active and passive energy conservation measures.

   The Specific Plan amendment meets the above finding because the amendment is minor in nature, focusing solely on certain types of wall signs, with minimal potential impact on the build out of the Specific Plan. The Specific Plan amendment is consistent with the goals, actions, policies, purposes, standards and guidelines of the Specific Plan, and will be compatible with existing and proposed neighboring development because it poses only minor modifications to the Specific Plan signage requirements within the I-205 Corridor Specific Plan area while respecting the aesthetic assets of the community.

* * * * * * * * * * * * * * * * *

The foregoing Resolution 2001-250 was passed and adopted by the Tracy City Council on the 17th day of July, 2001, by the following vote:

| | | |
|---|---|---|
| AYES: | COUNCIL MEMBERS: | HUFFMAN, IVES, TOLBERT, TUCKER, BILBREY |
| NOES: | COUNCIL MEMBERS: | NONE |
| ABSENT: | COUNCIL MEMBERS: | NONE |
| ABSTAIN: | COUNCIL MEMBERS: | NONE |

Dan Bilbrey
Mayor

ATTEST:
Sharon Smith
City Clerk

[G:\DES\City Council\July2001\smc]

RESOLUTION 2001-333

APPROVING AN APPLICATION FOR AN AMENDMENT OF THE I-205 CORRIDOR SPECIFIC PLAN WITH REGARD TO ALLOWABLE LAND USES AND BUILDING SETBACKS
2785 W. GRANTLINE ROAD
APPLICATION 3-01-SPA

WHEREAS, City Council adopted the I-205 Corridor Specific Plan on August 21, 1990, and

WHEREAS, City Council adopted the I-205 Corridor Specific Plan Master Environmental Impact Report on August 21, 1990, and amended the EIR by adopting a Negative Declaration on July, 1999, and

WHEREAS, Irwin G. Pasternack AIA and Associates, on behalf of America's Tire Company, and an application for an amendment of the I-205 Corridor Specific Plan on May 25, 2001, and

WHEREAS, The Planning Commission held a public hearing to review and consider the application on August 22, 2001, and

WHEREAS, The Planning Commission recommended that City Council approve the amendment application on August 22, 2001, and

WHEREAS, City Council held a public hearing to review and consider the application on September 18, 2001, and

WHEREAS, The project is consistent with the Environmental Impact Report (EIR) that was prepared for the I-205 Corridor Specific Plan and certified on August 21, 1990, and Negative Declaration adopted in July, 1999, and in accordance with CEQA Guidelines Section 15183, no further environmental assessment is required, and

WHEREAS, City Council finds:

The Specific Plan Amendment is consistent with the goals, actions and policies of the I-205 Corridor Specific Plan and with its purposes, standards and land use guidelines; will help to achieve a balanced community of all races, age groups, income levels, and ways of life; results in development of desirable character which will be compatible with existing and proposed development in the surrounding neighborhood; contributes to a balance of land uses that will enable local residents to work and shop within the Tracy Planning Area; respects the environmental and aesthetic assets of the community consistent with the economic realities; and incorporates, where feasible, active and passive energy conservation measures.

Conformance: The proposed specific plan amendment meets the above findings because the amendment is minor in nature, focusing on expanding the allowable uses within the Freeway Commercial land use designation that currently permits related,

more and less intense uses, and that was created for the purpose of allowing this type of use that is compatible with other permitted uses. The amendment to allow reduced building setbacks on non street-side property lines meets the above findings because the amendment is minor in nature, focusing solely on setback requirements, with minimal potential impact on the build out of the Specific Plan area. The specific plan amendment is consistent with the goals, actions, policies, purposes, standards, and guidelines of the Specific Plan, and will be compatible with existing development because it does not have any negative impacts on adjacent uses while respecting the aesthetics of the area community.

NOW, THEREFORE, BE IT RESOLVED, That City Council approve the America's Tire Company application to amend to the I-205 Corridor Specific Plan, Application 3-01-SPA, based on the above findings and as stated on Exhibit "1" attached and made part hereof.

The I-205 Corridor is amended as shown in Exhibit "1".

* * * * * * * * * * * * * * * * *

The foregoing Resolution 2001-333 was passed and adopted by the Tracy City Council on the 18th day of September, 2001, by the following vote:

| | | |
|---|---|---|
| AYES: | COUNCIL MEMBERS: | HUFFMAN, IVES, TOLBERT, TUCKER, BILBREY |
| NOES: | COUNCIL MEMBERS: | NONE |
| ABSENT: | COUNCIL MEMBERS: | NONE |
| ABSTAIN: | COUNCIL MEMBERS: | NONE |

Dan Bilbrey
Mayor

ATTEST:

Gloria Schmidt
City Clerk

[G:\DES\City Council\September 2001\

I-205 Corridor Specific Plan Amendments:

1. Section 4.1.2.2 ( C )(3a) is amended to read as follows:

   Building setback from any property line: 25 feet, unless the building is compatible in land use, scale and architecture to adjacent structures as determined through the development plan review process, or is a pad in a commercial shopping center, in which cases the setback may be reduced by up to 25 feet along non street property lines.

2. Table A-2 of Appendix A is amended to read as follows:

   Tires, batteries and accessories, sales and services are permitted in the CC, SC, FC land use designations, and conditionally permitted in the GC land use designation.

RESOLUTION 2001-396

AMENDING THE I-205 CORRIDOR SPECIFIC PLAN
WITH REGARD TO FREEWAY SIGNS
2785 W. GRANTLINE ROAD
APPLICATIONS 4-01-SPA

WHEREAS, City Council adopted the I-205 Corridor Specific Plan on August 21, 1990, and

WHEREAS, City Council adopted the I-205 Corridor Specific Plan Master Environmental Impact Report on August 21, 1990, and amended the EIR by adopting a Negative Declaration on July, 1999, and

WHEREAS, Sign Methods, Inc., on behalf of Home Depot, filed an application for an amendment of the I-205 Corridor Specific Plan on July 25, 2001, and

WHEREAS, The Planning Commission held a public hearing to review and consider the application on September 26, 2001, and

WHEREAS, The Planning Commission recommended that the City Council deny the amendment application on September 26, 2001, and

WHEREAS, City Council held a public hearing to review and consider the application on November 6, 2001, and

WHEREAS, The project is consistent with the Environmental Impact Report (EIR) that was prepared for the I-205 Corridor Specific Plan and certified on August 21, 1990, and Negative Declaration adopted in July, 1999, and in accordance with CEQA Guidelines Section 15311, no further environmental assessment is required, and

WHEREAS, The Applicant will return to the Planning Commission with an application for a Conditional Use Permit, and

WHEREAS, City Council finds:

**The Specific Plan Amendment is consistent with the goals, actions and policies of the I-205 Corridor Specific Plan and with its purposes, standards and land use guidelines; will help to achieve a balanced community of all races, age groups, income levels, and ways of life; results in development of desirable character which will be compatible with existing and proposed development in the surrounding neighborhood; contributes to a balance of land uses that will enable local residents to work and shop within the Tracy Planning Area; respects the environmental and aesthetic assets of the community consistent with the economic realities; and incorporates, where feasible, active and passive energy conservation measures.**

Conformance: The proposed specific plan amendment meets the above findings because the amendment is minor in nature, focusing on increasing the distance from the freeway that currently permitted freeway signs may be located. The amendment to allow an increase in distance for the location of freeway signs meets the above findings because the amendment is minor in nature, focusing solely on setback requirements, with minimal potential impact on the build out of the Specific Plan Area because there are no other Commercial Centers in the I-205 Corridor that meet the other criterion for freeway signs. The Specific Plan Amendment is consistent with the goals, actions, policies, purposes, standards, and guidelines of the Specific Plan, and will be compatible with existing development because it does not have any negative impacts on adjacent uses while respecting the aesthetics of the area.

NOW, THEREFORE, BE IT RESOLVED, That City Council amends the I-205 Corridor Specific Plan (Application 4-01-SPA), based on the above findings and as stated on Exhibit "1" attached and made part hereof. The I-205 Corridor is amended as shown in Exhibit "1".

* * * * * * * * * * * * * * * *

The foregoing Resolution 2001-396 was passed and adopted by the Tracy City Council on the 6th day of November, 2001, by the following vote:

| | | |
|---|---|---|
| AYES: | COUNCIL MEMBERS: | HUFFMAN, IVES, TOLBERT, TUCKER, BILBREY |
| NOES: | COUNCIL MEMBERS: | NONE |
| ABSENT: | COUNCIL MEMBERS: | NONE |
| ABSTAIN: | COUNCIL MEMBERS: | NONE |

Mayor

ATTEST:

City Clerk

[G:\DES\City Council\Nov 2001\smc

Resolution 2001-396
Exhibit 1

1-205 Corridor Specific Plan Amendments:

1- Section 4.1.2.2 ( G }(11 } is amended to read as follows:

> Each commercial center may have one freeway identification sign which shall require a Conditional Use Permit. The sign may identify any tenant(s} located within 700 feet of the freeway on any parcel within the center. Maximum height shall be 15 feet above crown of the nearest freeway, not to exceed 45 feet above finished site grade. Maximum sign area shall be 300 feet per sign face with a maximum of two sign faces.

May 20, 2003

**RESOLUTION 2003-184**

**CITY COUNCIL APPROVAL OF AN AMENDMENT TO THE I-205 CORRIDOR SPECIFIC PLAN MODIFYING THE CRITERIA FOR WALL SIGNS IN EXCESS OF 100 SQUARE FEET. APPLICANT IS IMAGE NATIONAL. OWNER IS KORNWASSER SHOPPING CENTER. APPLICATION NUMBER 2-03-SPA**

WHEREAS, on July 17, 2001, the City Council approved Specific Plan Amendment Application Number 1-01-SPA with regard to signage requirements in the I-205 Corridor Specific Plan area, and

WHEREAS, Image National submitted an application for an amendment to the I-205 Corridor Specific Plan (Application Number 2-03-SPA) on April 3, 2003, and

WHEREAS, The project is categorically exempt from the California Environmental Quality Act pursuant to CEQA Guidelines Section 15303, no further environmental assessment is necessary, and

WHEREAS, The Planning Commission conducted a public hearing to review and consider Specific Plan amendment application number 2-03-SPA on April 23, 2003 and recommended City Council approval, and

WHEREAS, The City Council conducted a public hearing to review and consider Specific Plan amendment application number 2-03-SPA on May 20, 2003, and

WHEREAS, The City Council made findings that the criteria established for evaluating wall signs in excess of 100 square feet, for purposes of approving or denying a conditional use permit on such proposed sign, shall be modified to exclude the requirement of having the building face upon which the sign is proposed to be attached be a minimum of 500 feet from the public right-of-way from which it can be seen and exclude the requirement of having the building on which the sign is proposed to be attached be a minimum of 30,000 square feet in size, because this change will allow for more flexibility in implementing the guidelines without similar future amendments and the two remaining criteria will be sufficient to ensure wall signs are kept to an appropriate size in proportion to the building;

NOW, THEREFORE BE IT RESOLVED, that the City Council hereby approves application number 2-03-SPA, an amendment to the I-205 Corridor Specific Plan Section 4.1.2.2.G.10.ii, to read as follows:

> Wall Signs: On single tenant buildings, signs should be located immediately above or adjacent to the primary building entrance or door of a commercial establishment. The area of any sign shall not exceed one-half square foot of sign area per lineal foot of building frontage. However, a wall sign of up to 250 square feet may be allowed upon securing a Conditional Use Permit, which demonstrates that:
>
> 1. The size of the sign is of an appropriate scale when compared to the building face on which it is proposed.

2. The total sign area for the building shall not exceed one square foot per lineal foot nor more than 75 percent of the building frontage. When 50 percent or more of the project signage is comprised of individual letters, the total signage shall not exceed 1.2 square feet per lineal foot of building frontage.

On smaller, multi-tenant buildings, signs should be located on the frontage of each individual tenant. The area of any single signs shall not exceed 100 square feet or more than 75 percent of the tenant frontage. Capital letters shall be no more than 2.5 feet high and lower case letters shall be no more than 1.5 feet in height. When individually lettered wall signs comprise over 50 percent of the tenant signage, the total area shall not exceed 1.2 square feet per lineal foot of tenant frontage. When comprising less than 50 percent of the tenant signage, the maximum sign area shall be one half square foot per lineal foot of business being served.

**********

The foregoing Resolution 2003-184 was adopted by the City Council on the 20th day of May 2003, by the following vote:

| | | |
|---|---|---|
| AYES: | COUNCIL MEMBERS | HUFFMAN, IVES, TOLBERT, TUCKER, BILBREY |
| NOES: | COUNCIL MEMBERS | NONE |
| ABSENT: | COUNCIL MEMBERS | NONE |
| ABSTAIN: | COUNCIL MEMBERS | NONE |

MAYOR

ATTEST:

CITY CLERK

RESOLUTION 2004-232

CITY COUNCIL RESOLUTION AMENDING THE I-205 CORRIDOR SPECIFIC PLAN AND THE TRACY MARKETPLACE MASTER SIGN PROGRAM TO RELEGATE AUTHORITY OF SIGN TEXT AMENDMENTS TO THE DEVELOPMENT AND ENGINEERING SERVICES DIRECTOR, CITY INITIATED - APPLICATION NUMBER 3-04-SPA

WHEREAS, The City adopted the I-205 Corridor Specific Plan on August 21, 1990, and

WHEREAS, On January 9, 1997, the City Council approved the Tracy Market Place Tenant Sign Program (Master Sign Program), and

WHEREAS, The project will not adversely affect or impair the benefits of occupancy, most appropriate development, property stability, or the desirability of the property in the vicinity because the amendment will not change the general character of the Tracy Marketplace or that of neighboring properties, and

WHEREAS, The amendments are consistent with the land use, design, and other elements of the I-205 Corridor Specific Plan, the City of Tracy General Plan, and the applicable requirements of the Tracy Municipal Code, and

WHEREAS, The sign text amendments are categorically exempt from the California Environmental Quality Act pursuant to Guideline Section 15311(a), On-premise signs, and

WHEREAS, The Planning Commission conducted a public hearing to review and consider the application on June 23, 2004, and

WHEREAS, The City Council conducted a public hearing to review and consider the application on July 20, 2004;

NOW, THEREFORE BE IT RESOLVED, That the City Council approves the following amendments to the I-205 Corridor Specific Plan and Tracy Marketplace Tenant Sign Program, Application Number 3-04-SPA:

1. Provision 5.1.3 "Amending the Specific Plan" in Chapter 5-4 of the I-205 Corridor Specific Plan currently states:

   The Specific Plan may be amended by resolution of the City Council, as frequently as deemed necessary by the City, following a public hearing. Amendments must, however, be found consistent with the General Plan.

   This provision shall be amended to the following:

   The Specific Plan may be amended by resolution of the City Council, as frequently as deemed necessary by the City, following a public hearing. The Development and Engineering Services Director may approve sign text amendments that do not include increases to the overall allowable sign area. Amendments must, however, be found consistent with the General Plan.

2. On page 2 of the Tracy Marketplace Tenant Sign Program under "Approval Procedure", the following sentence shall be added:

   The Development and Engineering Services Director may approve amendments to the Tenant Sign Program that do not include increases to the overall allowable sign area.

* * * * * * * * * * * * * *

The foregoing Resolution 2004-232 was adopted by the Tracy City Council on the 20th day of July 2004, by the following vote:

| | | |
|---|---|---|
| AYES: | COUNCIL MEMBERS: | IVES, TOLBERT, TUCKER, BILBREY |
| NOES: | COUNCIL MEMBERS: | NONE |
| ABSENT: | COUNCIL MEMBERS: | HUFFMAN |
| ABSTAIN: | COUNCIL MEMBERS: | NONE |

MAYOR

ATTEST:

CITY CLERK

DES:02

**RESOLUTION 2005-125**

**CITY COUNCIL APPROVAL OF THE PRELIMINARY AND FINAL DEVELOPMENT PLAN FOR TWO COMMERCIAL RETAIL BUILDINGS TOTALING 30,181 SQUARE FEET ON A 2.78-ACRE PARCEL ON THE WEST SIDE OF PAVILION PARKWAY, NORTH OF NAGLEE ROAD, AND A MINOR AMENDMENT TO THE I-205 SPECIFIC PLAN TO CHANGE THE LAND USE DESIGNATION OF THE PROJECT SITE FROM SERVICE COMMERCIAL TO GENERAL COMMERCIAL; ASSESSOR'S PARCEL NUMBERS 212-290-02 AND 03 APPLICATION NUMBERS 41-04-D AND 5-04-SPA**

WHEREAS, Schack and Company, Inc. and Tuoc Duong, on behalf of William and Lydia Yee submitted an application for a Planned Unit Development Preliminary and Final Development Plan review (Application Number 41-04-D) and an application for an amendment to the I-205 Specific Plan (Application Number 5-04-SPA) for two retail commercial buildings, totaling 30,181 square feet on October 5, 2004, and

WHEREAS, The subject property is located within the I-205 Corridor Specific Plan area, with a land use designation of Service Commercial, which allows auto and service oriented uses, and

WHEREAS, The applicant has requested to change the land use designation of the property to General Commercial in order to facilitate the development of the proposed retail project, and

WHEREAS, The Planning Commission conducted a public hearing to review and consider the applications on April 13, 2005, and recommended, by adoption of a resolution, City Council approval of a Preliminary and Final Development Plan and Specific Plan Amendment;

NOW, THEREFORE BE IT RESOLVED, The City Council hereby approves the PUD Preliminary and Final Development Plan for two commercial retail buildings, totaling 30,181 square feet, Application No. 41-04-D, and an amendment to the I-205 Specific Plan to change the land use designation of the 2.78-acre project site from Service Commercial to General Commercial, Application No. 5-04-SPA, subject to the conditions contained in Exhibits A and B to this Resolution, and based on the findings below.

1. The establishment, maintenance, and operation of the proposed use and associated structures are compatible with the land use, design, and operational characteristics of the neighboring properties. They will not, under the circumstances of the particular case or as conditioned, be injurious or detrimental to the health, safety, or general welfare of persons or property in the vicinity of the proposed use and its associated structures, or to the general welfare of the City because the project is consistent with the intent, design, and other elements of the I-205 Specific Plan, the City of Tracy General Plan, and applicable requirements of Chapter 10.08 of the Tracy Municipal Code, including, but not limited to, Article 26, Off-Street Parking Requirements, and Article 30, Development Review.

2. The project will not adversely affect or impair the benefits of occupancy, most appropriate development, property value stability, or the desirability of property in the vicinity because the architectural elements of the project as designed and conditioned, are an architecturally interesting addition to the vacant parcel, and will not adversely visually impair the benefits of

the properties in the vicinity, as the project includes desirable elements, which consist of a mix of building materials, colors, and landscaping.

3. The City Council adopted the I-205 Corridor Specific Plan and certified its Environmental Impact Report on August 21, 1990, and approved a subsequent Negative Declaration approved on July 6, 1999. The project, as designed and conditioned, will not cause any significant environmental impact, because CEQA Guidelines Section 15162 does not require that subsequent EIRs be prepared unless substantial changes requiring major revisions to the EIR occur, substantial changes due to new significant environmental effects are anticipated, new information showing potentially significant effects may occur. The discussion in the staff report states that none of the potential effects of the project have triggered a requirement for the completion of a new EIR, and therefore, no further environmental documentation is necessary for the project.

* * * * * * * * * * * * * * * * * * * *

The foregoing Resolution 2005-125 was adopted by the Tracy City Council on the 3rd day of May, 2005, by the following vote:

| | | |
|---|---|---|
| AYES: | COUNCIL MEMBERS: | IVES, SUNDBERG, TOLBERT, TUCKER, BILBREY |
| NOES: | COUNCIL MEMBERS: | NONE |
| ABSENT: | COUNCIL MEMBERS: | NONE |
| ABSTAIN: | COUNCIL MEMBERS: | NONE |

Dan Bilbrey
Mayor

ATTEST:

Sandra Edwards
City Clerk

RESOLUTION 2007-060

APPROVING SPECIFIC PLAN AMENDMENT (1-02-SPA), PUD PRELIMINARY AND FINAL DEVELOPMENT PLANS (30-03-D) AND
DENYING AN APPEAL OF THE PLANNING COMMISSION DECISION TO GRANT A CONDITIONAL USE PERMIT (13-03-CUP/2-06-APL)
(WINCO FOODS)

WHEREAS, applications have been filed or initiated for amendments to the City of Tracy's I-205 Corridor Specific Plan ("Specific Plan") to re-designate approximately 18.8 acres of a 21.3-acre site from Light Industrial to General Commercial, and for a Conditional Use Permit, Planned Unit Development Preliminary and Final Development Plan to allow the construction of an approximately 95,900 square foot WinCo Foods grocery store with approximately 600 parking spaces on the southern approximately 10.5 acres of the site (collectively, the "Project"), and

WHEREAS, The site was annexed to the City of Tracy ("City") in 1990, and

WHEREAS, The site received a zoning designation of Planned Unit Development (PUD) and Concept Development Plan approval through the I-205 Corridor Specific Plan on August 21, 1990, and

WHEREAS, The City Council certified the I-205 Corridor Specific Plan EIR on August 21, 1990, and

WHEREAS, The site is designated Commercial by the General Plan and Light Industrial by the Specific Plan, except for the southern 2.5 acres of the site which is designated General Commercial by the Specific Plan, and

WHEREAS, In accordance with Appendix A of the Specific Plan, a food market/supermarket over 30,000 square feet requires Conditional Use Permit approval from the Planning Commission in the General Commercial designation of the Specific Plan, and

WHEREAS, the City determined that the Project requires review pursuant to the California Environmental Quality Act ("CEQA") (Public Resources Code, sections 21000, *et seq.*), and pursuant to CEQA an Environmental Impact Report ("EIR") was prepared to evaluate the potential environmental effects of the Project, to evaluate potential alternatives to the Project, and to evaluate and recommend mitigation measures for all potentially significant impacts of the Project, and

WHEREAS, The Planning Commission conducted a public hearing on the Project on May 24, 2006, approved the Conditional Use Permit and recommended that the City Council certify the Final EIR and approve the Specific Plan amendment, and the PUD Preliminary and Final Development Plans, and

WHEREAS, On June 5, 2006, the City received an appeal of the Planning Commission decision to grant the Conditional Use Permit;

NOW, THEREFORE, BE IT RESOLVED by the City Council as follows:

1. <u>Environmental Impact Report</u>

In accordance with CEQA, the City Council has taken the following actions in regards to the Project:

a. Certified the EIR;

b. Made findings relating to significant impacts, alternatives, and Statement of Overriding Considerations; and

c. Adopted a Mitigation Monitoring and Reporting Program.

2. Specific Plan Amendment (1-02-SPA)

The City Council adopts the findings and recommendation of the Planning Commission and approves the Specific Plan Amendment, re-designating the site from Light Industrial to General Commercial as shown on Exhibit A.

3. PUD Preliminary and Final Development Plans (30-03-D)

The City Council adopts the findings and recommendation of the Planning Commission and approves of the PUD Preliminary and Final Development Plans subject to Planning Division Conditions of Approval dated April 3, 2007 (attached as Exhibit B) and Engineering Division Conditions of Approval dated March 22, 2007 (attached as Exhibit C).

4. Conditional Use Permit (13-03-CUP)

The City Council adopts the findings and recommendation of the Planning Commission and denies the appeal of the Planning Commission decision to grant the Conditional Use Permit.

**********

The foregoing Resolution 2007-060 was adopted by the City Council on the 3rd day of April 2007, by the following vote:

| | | |
|---|---|---|
| AYES: | COUNCIL MEMBERS: | ABERCROMBIE, SUNDBERG, TOLBERT, TUCKER, IVES |
| NOES: | COUNCIL MEMBERS: | NONE |
| ABSENT: | COUNCIL MEMBERS: | NONE |
| ABSTAIN: | COUNCIL MEMBERS: | NONE |

Mayor

ATTEST:

City Clerk

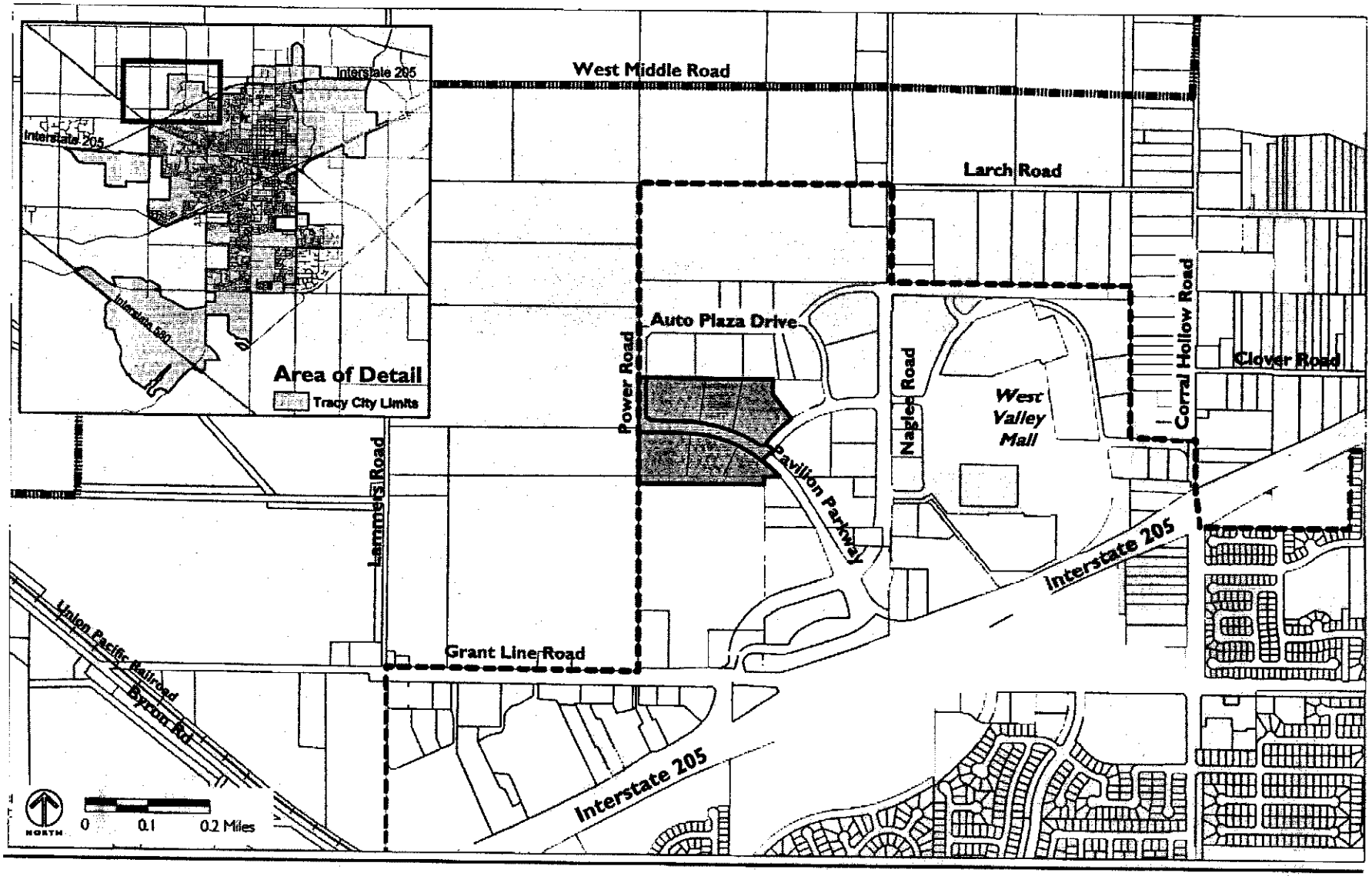


EXHIBIT A

Project Location

Sphere of Influence

City Limit

PROJECT LOCATION

RESOLUTION 2007-187

APPROVING THE AMENDMENT TO THE I-205 SPECIFIC PLAN FOR BUILDING SETBACKS ALONG PAVILION PARKWAY AND A PRELIMINARY AND FINAL DEVELOPMENT PLAN FOR A 12,590 SQUARE FOOT RETAIL AND BANK BUILDING AT THE SOUTHWEST CORNER OF NAGLEE ROAD AND PAVILION PARKWAY; ASSESSOR'S PARCEL NUMBER 212-290-30 APPLICATION NUMBERS 2-07-SPA 23-06-D

WHEREAS, The City Council adopted the I-205 Corridor Specific Plan and certified its Environmental Impact Report on August 21, 1990, and approved a subsequent Negative Declaration on July 6, 1999, and the City Council certified the 2006 General Plan EIR on July20, 2006, and

WHEREAS, BH Development, on behalf of Tracy Federal Credit Union, submitted an application for a Planned Unit Development Preliminary and Final Development Plan review (Application Number 23-06-D) on December 21, 2006, and

WHEREAS, Through the review process for the Preliminary and Final Development Plan it was determined that an amendment to the I-205 Specific Plan would be necessary for the feasibility of the development of the proposed building on the site, due to a need to widen Pavilion Parkway for a dedicated right turn lane by dedicating property from the project site for said dedication, and

WHEREAS, The subject property is located within the I-205 Corridor Specific Plan area, with a land use designation of General Commercial, which allows retail uses and banks as permitted land uses, and

WHEREAS, The Planning Commission conducted a public hearing to review and consider the applications on July 11, 2007, and recommended, by adoption of a resolution, City Council approval of the Specific Plan Amendment as well as the Preliminary and Final Development Plan;

NOW, THEREFORE BE IT RESOLVED, The City Council does hereby approve an amendment to the I-205 Specific Plan for building setbacks along Pavilion Parkway, and PUD Preliminary and Final Development Plan for a 12,590 square foot retail and bank building, Application No. 23-06-D, subject to the conditions contained in Exhibits 1 and 2 to this Resolution, and based on the findings below.

1. The establishment, maintenance, and operation of the proposed use and associated structures are compatible with the land use, design, and operational characteristics of the neighboring properties. It will not, under the circumstances of the particular case or as conditioned, be injurious or detrimental to the health, safety, or general welfare of persons or property in the vicinity of the proposed use and its associated structures, or to the general welfare of the City because the project is consistent with the land use, design, and other elements of the I-205 Specific Plan, the City of Tracy General Plan, and applicable requirements of Chapter 10.08 of the Tracy Municipal Code, including, but not limited to, Article 26, Off-Street Parking Requirements, and Article 30, Development Review. The proposed retail and bank land uses are complementary to the City's I-205 area because of the adjacency to several other similar retail and auto-oriented uses.

2. The project will not adversely affect or impair the benefits of occupancy, most appropriate development, property value stability, or the desirability of property in the vicinity because the

architectural elements of the project as designed are a quality addition to the vacant parcel, and will not adversely visually impair the benefits of the properties in the vicinity, as the project includes desirable elements, which consist of a variety of building materials, varying colors, and landscaping. The architectural elements utilized in the building design include concrete s-tile roofing, cement plaster in several colors, glass storefronts, and canvas awnings.

3. The project, as designed and conditioned, will not cause any significant environmental impact, because it is consistent with the 2006 General Plan EIR certified by the City Council on July 20, 2006. The project is consistent with the land use, design, and other elements of the I-205 Specific Plan, the City of Tracy General Plan, and applicable requirements of the Tracy Municipal Code.

* * * * * * * * * * * * * * * * * * * *

The foregoing Resolution 2007-187 was adopted by the City Council on the 7th day of August, 2007, by the following vote:

AYES: COUNCIL MEMBERS: ABERCROMBIE, SUNDBERG, TOLBERT, TUCKER, IVES
NOES: COUNCIL MEMBERS: NONE
ABSENT: COUNCIL MEMBERS: NONE
ABSTAIN: COUNCIL MEMBERS: NONE

Mayor

ATTEST:

City Clerk

Exhibit 1 - Development and Engineering Services Department Conditions of Approval

# Conditions of Approval for Pavilion Commons
# Application Nos. 2-07-SPA and 23-06-D
# July 11, 2007

1. These Conditions of Approval shall apply to the real property described as an amendment to the I-205 Specific Plan for building setbacks on Pavilion Parkways, and a Preliminary and Final Development Plan for a 12,590 square foot retail and bank building, Application Numbers 2-07-SPA and 23-06-D (hereinafter "Project"), located on a 1.205-acre site at the southwest corner of Naglee Road and Pavilion Parkway, Assessor's Parcel Number 212-290-30.

2. The following definitions shall apply to these Conditions of Approval:

   a. "Applicant" means any person, or other legal entity, defined as a "Developer".

   b. "City Engineer" means the City Engineer of the City of Tracy, or any other duly licensed engineer designated by the City Manager, or the Development and Engineering Services Director, or the City Engineer to perform the duties set forth herein.

   c. "City Regulations" means all written laws, rules, and policies established by the City, including those set forth in the City of Tracy General Plan, the Tracy Municipal Code, I-205 Corridor Specific Plan, ordinances, resolutions, policies, procedures, and the City's Design Documents (including the Standard Plans, Standard Specifications, Design Standards, and relevant Public Facility Master Plans).

   d. "Development and Engineering Services Director" means the Development and Engineering Services Director of the City of Tracy, or any other person designated by the City Manager or the Development and Engineering Services Director to perform the duties set forth herein.

   e. "Conditions of Approval" shall mean the conditions of approval applicable to the 12,590 square foot retail and bank building, Application Numbers 2-07-SPA and 23-06-D. The Conditions of Approval shall specifically include all Development and Engineering Services Department, including Planning Division and Engineering Division conditions set forth herein.

   f. "Project" means the real property consisting of approximately 1.205 acres located at the southwest corner of Naglee Road and Pavilion Parkway, Assessor's Parcel Number 212-290-30.

   g. "Subdividor" means any person, or other legal entity, who applies to the City to divide or cause to be divided real property within the Project boundaries, or who applies to the City to develop or improve any portion of the real property within the Project boundaries. The term "Developer" shall include all successors in interest.

3. The Developer shall comply with all laws (federal, state, and local) related to the development of real property within the Project, including, but not limited to: the Planning and Zoning Law (Government Code sections 65000, et seq.), the Subdivision Map Act (Government Code sections 66410, et seq.), the California Environmental Quality Act (Public Resources Code sections 21000, et seq., "CEQA"), and the Guidelines for California Environmental Quality Act (California Administrative Code, title 14, sections 1500, et seq., "CEQA Guidelines").

4. Unless specifically modified by these Conditions of Approval, the Developer shall comply with all City Regulations.

5. Unless specifically modified by these Conditions of Approval, the Developer shall comply with all mitigation measures identified in the General Plan Environmental Impact Report, dated July 20, 2006, and the I-205 Corridor Specific Plan Negative Declaration dated July 6, 1999.

6. Pursuant to Government Code section 66020, including section 66020(d)(1), the City HEREBY NOTIFIES the Developer that the 90-day approval period (in which the Developer may protest the imposition of any fees, dedications, reservations, or other exactions imposed on this Project by these Conditions of Approval) has begun on the date of the conditional approval of this Project. If the Developer fails to file a protest within this 90-day period, complying with all of the requirements of Government Code section 66020, the Developer will be legally barred from later challenging any such fees, dedications, reservations or other exactions.

7. Except as otherwise modified herein, all construction shall be consistent with the site plan and architectural elevations received by the Development and Engineering Services Department on June --, 2007.

8. Prior to the issuance of a building permit, the applicant shall provide a detailed landscape and irrigation plan consistent with City landscape and irrigation standards, including, but not limited to Tracy Municipal Code Section 10.08.3560, I-205 Corridor Specific Plan, and Water Efficient Landscape Guidelines on private property, and the Parks and Parkways Design Manual of public property, to the satisfaction of the Development and Engineering Services Director. Said landscape plans shall include documentation which demonstrates that there is no less than 15 percent of the parking area in landscaping, and 40 percent canopy tree coverage of the parking area at tree maturity.

9. Where landscape planters are parallel and adjacent to vehicular parking spaces, the planter areas shall incorporate a 12-inch wide concrete curb along their perimeter which is adjacent to the parking space in order to allow access to vehicles without stepping into landscape planters.

10. All parking spaces shall be double-striped in compliance with City of Tracy Standards Plan number 154.

11. Prior to the issuance of a building permit, an Agreement for Maintenance of Landscape and Irrigation Improvements shall be executed and financial security submitted to the

Development and Engineering Services Department. The Agreement shall ensure maintenance of the on-site landscape and irrigation improvements for a period of two years. Said security shall be equal to the actual material and labor costs for installation of the on-site landscape and irrigation improvements, or $2.50 per square foot of on-site landscape area.

12. No roof mounted equipment, including, but not limited to, HVAC units, vents, fans, antennas, sky lights and dishes whether proposed as part of this application, potential future equipment, or any portion thereof, shall be visible from I-205, Naglee Road, Pavilion Parkway, or any other public right-of-way.

13. All vents, gutters, downspouts, flashing, electrical conduit, and other wall-mounted or building-attached utilities shall be internalized when possible, or painted to match the color of the adjacent surface or otherwise designed in harmony with the building exterior to the satisfaction of the Development and Engineering Services Director.

14. Prior to final inspection or certificate of occupancy, on-site circulation signs shall be installed to the satisfaction of the Development and Engineering Services Director.

15. Prior to Final inspection or certificate of occupancy, all exterior and parking area lighting shall be directed downward or shielded, to prevent glare or spray of light into the public rights-of-way, to the satisfaction of the Development and Engineering Services Director.

16. Prior to the issuance of a building permit, three bicycle parking spaces shall be provided in accordance with Tracy Municipal Code Section 10.08.3510 to the satisfaction of the Development and Engineering Services Director.

17. All PG&E transformers, phone company boxes, Fire Department connections, backflow preventers, irrigation controllers, and other on-site utilities, shall be vaulted or screened from view from any public right-of-way, behind structures or landscaping, to the satisfaction of the Development and Engineering Services Director.

18. The applicant shall pay all applicable fees for the project, including, but not limited to, development impact fees, building permit fees, plan check fees, grading permit fees, encroachment permit fees, inspection fees, school fees, or any other City or other agency fees or deposits that may be applicable to the project.

19. All improvements shall be consistent with the Tracy Municipal Code, Standard Plans, and other applicable City Regulations.

20. Prior to the issuance of a building permit, a detailed plan of the trash enclosure shall be approved, showing solid metal doors, an interior concrete curb, a minimum height of seven feet, and exterior materials and color compatible with the adjacent building exterior.

06/27/07

EXHIBIT B
TO PLANNING COMMISSION RESOLUTION NO. 2007-___

**PAVILION COMMONS**
Part of I-205 Specific Plan Parcel GL-5A-West
Northwest Corner of Pavilion Parkway and Naglee Road
Assessor's Parcel Number 212-290-30

**PRELIMINARY/FINAL DEVELOPMENT PLAN**
(Application No. 23-06-D)

DEVELOPMENT & ENGINEERING SERVICES DEPARTMENT
**ENGINEERING DIVISION CONDITIONS OF APPROVAL**

A. General Provisions and Definitions.

1. These Development Conditions of Approval (hereinafter "Conditions of Approval") shall apply to the real property described as Parcel 4 of that certain parcel map recorded in Book 22 of Parcel Maps, at Page 76 of the San Joaquin County Records, more particularly described as Assessor's Parcel Number 212-290-30, and generally located at the northwest corner of Pavilion Parkway and Naglee Road (hereinafter "Property").

2. The following definitions shall apply to these Conditions of Approval:

   a. "City Engineer" means the City Engineer of the City of Tracy, or any other duly licensed engineer designated by the City Manager, or the Development & Engineering Services Director, or the City Engineer to perform the duties set forth herein.

   b. "City Regulations" means all written laws, rules, and policies established by the City, including those set forth in the City of Tracy General Plan (also known as the Urban Management Plan), the Tracy Municipal Code, ordinances, resolutions, policies, procedures, and the City's Design Documents (including the Standard Plans, Standard Specifications, Design Standards, and relevant Public Facility Master Plans).

   c. "Conditions of Approval" shall mean the development conditions of approval applicable to the site development known as Pavilion Commons proposed to be constructed within the Property.

   d. "Project" means the site development known as Pavilion Commons proposed to be constructed with the real property described as Parcel 4 of that certain parcel map recorded in Book 22 of Parcel Maps, at Page 76 of the San Joaquin County Records, more particularly described as Assessor's Parcel Number 212-290-30, and is generally located at the northwest corner of Pavilion Parkway and Naglee Road.

e. "Developer" means any person, or other legal entity, who applies to the City to divide or cause to be divided real property within the Project boundaries, or who applies to the City to develop or improve any portion of the real property within the Project boundaries. The term "Developer" shall include all successors in interest.

3. The Developer shall comply with all laws (federal, state, and local) related to the development of real property within the Project, including, but not limited to: the Planning and Zoning Law (Government Code sections 65000, et seq.), the Subdivision Map Act (Government Code sections 66410, et seq.), the California Environmental Quality Act (Public Resources Code sections 21000, et seq, "CEQA"), and the Guidelines for California Environmental Quality Act (California Administrative Code, title 14, sections 15000, et seq., "CEQA Guidelines").

4. Pursuant to Government Code Section 66020, including Section 66020 (d)(1), the City HEREBY NOTIFIES the Developer that the 90-day approval period (in which the Developer may protest the imposition of any fees, dedications, reservations, or other exactions imposed on this Project by these Conditions of Approval) has begun on the date of the conditional approval of this Project. If the Developer fails to file a protest within this 90-day period, complying with all of the requirements of Government Code Section 66020, the Developer will be legally barred from later challenging any such fees, dedications, reservations or other exactions.

B. Conditions of Approval Prior to Approval of Grading and Encroachment Permit Applications: No application for grading permit and encroachment permit within the Project boundaries will be accepted by the City as complete until the Developer provides all documents required by City Regulations and these Conditions of Approval, to the satisfaction of the City Engineer, including but not limited to, the following:

1. The Developer has completed all requirements set forth in this section.

2. The Developer has obtained the approval of all other public agencies with jurisdiction over the required public facilities.

3. The Grading and Improvement Plans prepared in accordance with the Subdivision Ordinance, City's Design Documents and these Conditions of Approval. The improvement plans shall be prepared to specifically include, but not be limited to, the following items:

a. All existing and proposed utilities.

b. All supporting calculations, specifications, and reports related to the design of the improvements.

c. On-site drainage connections to underground storm drains as approved by the City Engineer.

d. Improvement Plans will include design of frontage improvements behind the street curb to the property line on Naglee Road and Pavilion Parkway.

e. Improvement Plans prepared on a 4-mil thick 24" x 36" polyester film (mylar). Improvement Plans shall be prepared under the supervision of, and stamped and signed by a Registered Civil, Traffic, Electrical, Mechanical Engineer, and Registered Landscape Architect for the relevant work.

f. The grading plan shall be prepared in accordance with applicable sections of the Tracy Municipal Code. The grading plan shall indicate the location and elevation of the project's storm drainage release point.

g. The landscape and irrigation plans.

h. Private utility and joint-trench plans.

4. A construction cost estimate for all required public facilities, prepared in accordance with City Regulations.

5. Payment of plan checking, inspection and grading and encroachment permit fees, in accordance with the Conditions of Approval and City Regulations.

6. Copy of the Reciprocal Access and Drainage Easements recorded at the San Joaquin County Records as Document Nos. 2002-164955 and 2004-031188, as required in Condition F-2, below.

7. Three (3) sets or copies of the Storm Water Pollution Prevention Plan (SWPPP) and Notice of Intent (NOI) that were submitted to the State Water Quality Control Board (SWQCB) and all documentation or written approvals from the SWQCB, as required in Condition E-3, below. After the completion of the Project, the Developer is responsible for filing the Notice of Termination (NOT) required by SWQCB. The Developer shall provide the City a copy of the filed Notice of Termination form. Cost of preparing the SWPPP, NOI and NOT including the filing fee of the NOI and NOT shall be paid by the Developer. The Developer shall provide the City with the Water Discharge Identification number, prior to the issuance of the Grading Permit.

8. Tracy's Fire Marshall's signature on the Utility Improvement Plans indicating their approval for the fire service connection and fire and emergency vehicle access for the Project as required in Conditions H-2, I-12 and I-14 .

9. Signed and notarized Grant Deed (Offer To Dedicate Right-of-Way for Roadway Purposes), with signed and stamped legal description, for the dedication of a 10 feet wide strip of land for the future widening of the intersection of Naglee Road/Pavilion Parkway, as required by these Conditions of Approval and specifically in Condition I-9, below. Size and location of right-of-way dedication on Pavilion Parkway must be consistent with the geometric configuration of the Phase V of the Grant Line Road/I-205 Interchange.

10. Signed and notarized Grant of Easement and signed and stamped legal description, for the dedication of a 10-foot wide Public Utility Easement (PUE) along the Project's frontage on Pavilion Parkway and Naglee Road, as required in Condition I-5, below.

C. Conditions of Approval Prior to Approval of Building Permit. No building permit within the Project boundaries will be approved by the City until the Developer demonstrates, to the satisfaction of the City Engineer, compliance with all required Conditions of Approval, including, but not limited to, the following:

1. The Developer has completed all requirements set forth in Condition B, above.

2. The Project is within I-205 Specific Plan Parcel GL-5A. The finance plan for this Project must be approved by the City Council, prior to the issuance of the first building permit. The Developer shall pay the Project's share of cost of all infrastructure improvements as identified in the Project's finance plan.

3. Payment of I-205 development impact fees (a.k.a. capital in-lieu fees) as specified in the Project's finance plan and all fees as required in the updated I-205 Specific Plan Finance & Implementation Plan (FIP), these Conditions of Approval and City Regulations. The Developer shall pay to the City the Project's fair share of the cost of non-program streets and non-program traffic signals within the I-205 Corridor Specific Plan Area in accordance with I-205 North Roadway Funding Study approved by the City, latest I-205 Infrastructure Cost Allocation Spreadsheet #47 and as shown on the Project's finance plan.

4. Signed and stamped letter from the Project's Geo-technical Engineer certifying that grading work within the Project were performed under the Project's Geo-technical Engineer's direct supervision and meets the requirements of the Project's Engineering Soils Report's and Geo-technical Engineer's recommendations, as required in Condition E-1, below.

5. Prior to the issuance of any building permit within the Project, an update to the Finance Implementation Plan (FIP) for the I-205 Corridor Specific Plan Area shall be completed. The update to the FIP will update the list of impacted street intersections or roadway improvements and also determine the cost of constructing the roadway improvements. The Developer shall be subject to the fair share of the increase in costs to the roadway improvements that will result from the update of the FIP. The Developer shall pay its fair share of the increase in costs as a result of the update of the FIP, prior to the issuance of any building permit within the Project.

D. Conditions of Approval Prior to Certificate of Occupancy. No certificate of occupancy within the Project boundaries will be approved by the City until the Developer provides documentation which demonstrates, to the satisfaction of the City Engineer, that:

1. The Developer has completed all requirements set forth in Condition C above and in this section.

2. The Developer has completed construction of all public facilities required to serve the building for which a certificate of occupancy is requested. Unless specifically provided in these Conditions of Approval, or some other City Regulation, the Developer shall take all actions necessary to construct all public facilities required to serve the Project, and the Developer shall bear all costs related to construction of the public facilities (including all costs of design, construction, construction management, plan check, inspection, land acquisition, program implementation, and contingency).

3. Frontage improvements as described in these Conditions of Approval and as shown on the Improvement Plans shall be completed by the Developer and accepted as complete by the City Council. The City may allow issuance of the temporary certificate of occupancy, if the frontage improvements described in these Conditions of Approval are completed (after satisfactory completion of items in the deficiency report and a date of City Council meeting has been arranged for the acceptance of the frontage improvements).

E. Grading:

1. A Grading Plan prepared by a Registered Civil Engineer and accompanied by Soils Engineering and Engineering Geology reports shall be submitted to the City with Subdivision Improvement Plans. The reports shall provide recommendations regarding adequacy of sites to be developed by the proposed grading and also information relative to the stability of soils. Prior to the issuance of the building certificate of occupancy, the Developer shall submit a letter, signed and stamped by a Registered Geo-technical Engineer, certifying that grading work including excavation, backfilling, compacting and backfilling work were performed by the Developer meets the requirements of the Project's Soils report and it was completed under the supervision of the Registered Geotechnical Engineer (licensed to practice in the State of California).

2. All grading shall require a Grading Permit. Erosion control measures shall be implemented in accordance with plans approved by the City Engineer for all grading work not completed before October 15. Improvement Plans shall designate all erosion control methods and materials to be employed.

3. Prior to the issuance of the Grading Permit, the Developer shall submit three (3) sets of the Storm Water Pollution Prevention Plan (SWPPP) and a copy of the Notice of Intent (NOI) submitted to the State Water Quality Control Board (SWQCB) and any documentation or written approvals from the SWQCB. After the completion of the project, the Developer is responsible for filing the Notice of Termination (NOT) required by SWQCB. The Developer shall provide the City, a copy of the completed Notice of Termination. Cost of preparing the SWPPP, NOI and NOT including the filing fee of the NOI and NOT shall be paid by the Developer. The Developer shall provide the City with Waste Water Discharge Identification number, prior to the issuance of the grading permit. The Developer shall comply with all the

requirements of the SWPPP and applicable Best Management Practices (BMPs) and the City's Storm Water Management Program.

4. The building finish floor must be set to be 1 foot higher than the highest 100-year flood plain elevation or contour. The lowest point in the parking area or the Property shall not be more than 4 feet below the highest 100-year flood plain elevation or contour.

F. Storm Drainage:

1. The Developer shall install on-site storm drainage system with catch basin(s) or field inlet(s) and shall ensure that storm drain lateral is adequately sized and has sufficient flow capacity to handle storm run-offs from the property. The site shall be graded and improved in such a way that storm run-offs will drain to an on-site catch basin(s) or field inlet(s). A storm drain manhole will be required at the point of connection with the City's storm drain trunk line on Pavilion Parkway.

2. The Project's site grading shall be designed such that the Project has a functional overland storm drainage release point to the satisfaction of the City. The purpose of the overland storm drainage release point is to provide a low spot or an area where water leaves the Project site and drains directly to an improved public street with a functional storm drain system, in an event the on-site storm drainage system fails to function as designed or it is clogged. It is intended that storm water will overland drain to the street before water level reaches the top of the building finish floor. The building finish floor is recommended to be at least 0.70 feet higher than the overland storm drainage release point. The Grading and Drainage Plans must indicate the location and elevation of the overland storm drainage release point and specify any improvements that may be necessary to create a functional overland storm drainage release point. Storm water will not be allowed to drain through private property without prior agreements and/or permission from the affected property owner(s). The Developer shall provide the City a copy of the agreement and/or written permission, prior to the issuance of the grading permit. The agreement and/or easements reviewed by the City must be filed at the San Joaquin County Recorder's Office.

G. Sanitary Sewer:

1. The Developer will be required to install sanitary sewer lateral with cleanout per City Standards. The Developer shall be responsible to ensure that proposed sanitary sewer lateral is properly sized and has adequate flow capacity to carry sewage flows from the Project to the City's sanitary sewer main on Pavilion Parkway. The City will accept responsibility for the maintenance of the sanitary sewer lateral, only if a sanitary sewer cleanout is installed and it is installed at the location specified in City Standard Plan No. 203.

H. Water System:

1. The Developer shall install and complete the water system connection, including Radio-Read water meter and R/P Type back-flow protection devices and double check detector per City Standards, prior to the issuance of the building certificate of occupancy. City's responsibility to maintain water lines shall be from the water main on the street to the water meter (inclusive) only. Maintenance of all on-site water lines, laterals, sub-meters, valves, fittings, fire hydrant and appurtenances shall be the responsibility of the Developer.

2. The Developer shall design and install fire service line for the Project in accordance with City standards. Size, type and location of the fire service line and appurtenances shall be approved by the Fire Department.

I. Special Conditions:

1. All improvements shall be in accordance with all City Regulations, Facilities Master Plan for storm drainage, roadway, wastewater and water adopted by the City, Tracy Design Standards and Specifications, and Parks and Parkways Design Manual, or as otherwise specifically approved by the City.

2. The Developer will be required to underground all overhead private utilities including the Project's service connections, and will be eligible for reimbursements, if applicable, subject to the requirements of section 7.04.120 of the Tracy Municipal Code (TMC).

3. The Developer shall construct commercial driveways in accordance with City's Standard Plan No. 133. The maximum driveway width is 24 feet and the maximum driveway approach width is 30 feet (measured from the point where the curb starts to drop). The City will allow a driveway more than 24 feet in width under special circumstances such as for delivery truck and emergency vehicle(s) ingress/egress, subject to specific approval from the City Engineer.

4. The Developer shall submit for review a detailed design of street and utilities improvements behind curb along the frontage of the Project on Naglee Road and Pavilion Parkway (hereinafter "Frontage Improvements") at the time of submittal of Grading and Improvement Plans. The Developer shall design and construct the Frontage Improvements in accordance with City Regulations and I-205 Corridor Specific Plan standards. Frontage Improvements shall include but not be limited to curb, gutter, new asphalt pavement, commercial driveway, sidewalk, street lighting, landscape with automatic irrigation, fire hydrant, domestic water service, irrigation service, fire service, signing, marking and striping. Frontage Improvements shall be completed by the Developer, accepted as complete by the City Council, prior to the issuance of the building certificate of occupancy for the Project.

5. The Developer shall dedicate a 10-foot wide Public Utility Easement (PUE) behind the proposed property lines along the entire frontages of the Project on Naglee Road

and Pavilion Parkway, for the installation, repair, operation and maintenance of both private and public utilities, all at the Developer's sole cost and expense. The Grant of Easement must be recorded at the San Joaquin County Recorder, prior to the issuance of the building permit. A signed and notarized Grant of Easement including the signed and stamped legal description of the 10-foot wide PUE must be submitted to the City, prior to the issuance of the Grading Permit.

6. If cuts are required to install any utility connections on an existing street, the Developer will be required to install a 2-inch thick (uniform thickness) asphalt concrete overlay with reinforcing fabric 25 feet from each side of the trench. Existing pavement must be cut or grind 2 inches deep (uniform thickness) for the entire area where asphalt concrete overlay will be placed. If trench goes beyond centerline of street, apply 2 inches asphalt concrete overlay the entire width of the pavement. The elevation of the pavement crown and existing cross slope must remain.

7. The Developer shall comply with all applicable requirements of the I-205 Corridor Specific Plan, approved by the City Council on August 21, 1990, pursuant to Resolution No. 90-328, and the I-205 Corridor Specific Plan Amendment, approved by the City Council on July 6, 1999, pursuant to Resolution No. 99-240, and all the updates. Developer shall also comply with the requirements of the Property's Finance Plan.

8. Developer, and/or owner of record, is responsible for assuring the maintenance of the public improvements installed in the right-of-way. The public improvements include, but are not limited to, street landscaping, sidewalk, and improvements as defined in California Streets and Highway Code Sections 22525 et. seq. The Developer shall be responsible for all formation costs. To comply with this obligation, the Developer, and/or owner of record, shall evidence one of the following prior to issuance of the encroachment permit: (i) participation in an existing Landscape Maintenance District, or (ii) formation of a new Landscape Maintenance District.

9. Phase 5 of the Project Study Report for the I-205 Highway/Grant Line Road Interchange (PSR) require two right-turn lanes on Pavilion Parkway for southbound Naglee Road and two left-turn lanes on Pavilion Parkway for northbound Naglee Road. Under this condition, the existing I-205 Westbound On and Off-ramps are relocated to Grant Line Road between the I-205 Highway bridge and Naglee Road. Length and shape or configuration of these two dual turn lanes shall meet the recommendations in the Technical Memorandum dated June 14, 2007 prepared by Fehr & Peers (City's consultant). The future widening of the intersection of Naglee Road and Pavilion Parkway will require 10 feet wide right-of-way along the north and south sides of Pavilion Parkway. No right-of-way will be needed on Naglee Road. The Developer shall dedicate 10 feet wide strip of land at the southwest corner of Naglee Road/Pavilion Parkway, subject to reimbursement. The final amount of compensation for the cost of right-of-way on Pavilion Parkway shall be based on a unit cost of $125,000 per acre. The City shall pay the Developer at the time the City constructs the improvements for the Phase 5 of the I-205 Highway/Grant Line Road Interchange. To begin the processing of the reimbursement, the Developer must

submit a written request to the City stating the final amount of compensation and provide all documentation required by the City such as Preliminary Title Report, Tax Letter certifying that Property taxes has been paid, and others. The Grant Deed (or Offer to Dedicate Right-of-Way for Roadway Purposes) with legal description must be prepared by the Developer, and submitted for City's review as part of a complete submittal of Improvement Plans. The Grant Deed must be filed for recording at the San Joaquin County Recorder, prior to the issuance of the grading or encroachment permit, whichever occurs first.

10. If the City determines that there's an excess right of way at the southwest corner of NagleeRoad/Pavilion Parkway at the time of design and preparation of improvement plans for the Phase 5 of the I-205 Highway/Grant Line Road Interchange, the City shall process the vacation of excess right-of-way in accordance with the California Streets and Highways Code. The Developer shall pay for the fair-market value of the land or as determined by the City, including the fees for processing the vacation of right of way, cost of preparing legal description and maps, and recordation of documents at the San Joaquin County Recorder, for the conveyance of ownership of the vacated excess right of way. After the City makes a determination that there's an excess right-of-way and it is not needed for any public facilities or improvements, the City will notify the Developer in writing. Upon receipt of the notification from the City, the Developer or current owner of the Property must submit a request to vacate the excess right-of-way and shall pay the processing fees as discussed above.

11. The Developer shall design and construct landscaping improvements along the entire frontage of the Project on Naglee Road and Pavilion Parkway. Design and construction of the landscaping improvements, including the automatic irrigation system (with Motorola Controller) shall be in accordance with City's Park and Parkways Design Manual, approved Irrigation and Landscaping Plans and Specifications, and City Regulations. Irrigation and Landscaping Plans must be submitted on a 24" x 36" size mylar and signed and stamped by a registered Landscape Architect, licensed to practice in the State of California.

12. The Developer must satisfy the Fire Department's concerns regarding on-site and off-site fire access without impeding the traffic circulation at the entryways or access points to the Project from Naglee Road and Pavilion Parkway, prior to the City Engineer's approval and signature on the improvement plans. Any modification to the improvement plans that are required by the City's Fire Department in order to comply with this condition and their specific requirements must be completed by the Developer, prior to the approval of the Improvement Plans, and work must be completed all at the Developer's sole cost and expense.

13. As part of a complete submittal of improvement plans, the Developer must submit documentation such as preliminary title, tax certificate, etc. or proof of ownership of the Property. If different ownership, the Developer shall furnish a letter stating that permission has been granted by the current owner of the Property for the installation of on-site improvements such as storm drain pipes, catch basin, waterline extension

for fire, irrigation and domestic services, construction of street improvements and for fire service-looping requirements.

14. The Developer shall be required to obtain approval from the Fire Department for design and installation of fire prevention facilities to serve the Project and for fire truck access to the Property, if applicable.

15. All existing on-site wells, if any, shall be abandoned in accordance with the City and San Joaquin County requirements. All costs associated with the abandonment of existing wells including the cost of permits, if required, shall be the responsibility of the Developer. The Developer shall provide the City documentation or copy of permit issued by the San Joaquin County, approving the removal of destruction of existing well, if applicable, prior to the issuance of the Grading Permit.

Nothing contained herein shall be construed to permit any violation of relevant ordinances and regulations of the City of Tracy, or other public agency having jurisdiction. These Conditions of Approval does not preclude the City from requesting additional revisions and requirements to the Improvement Plans, prior to the City Engineer's signature and approval of the proposed improvement plans, if the City deems it necessary. The Developer shall bear all cost for the inclusion, design, and implementations of such additions or revisions and requirements, without reimbursement or any payment from the City.

Prepared By: _____ Date: _____

Reviewed By: _____ Date: _____
CRISELDO S. MINA, P. E.
Senior Civil Engineer

01-061107rp
1st rev 06/18/07 by cm
2nd rev 06/27/07 by cm

RESOLUTION 2009-242

AMENDING THE I-205 CORRIDOR SPECIFIC PLAN APPENDIX A, TABLE A-2, PERMITTED AND CONDITIONALLY PERMITTED LAND USES
APPLICATION NUMBER SPA09-0002

WHEREAS, The I-205 Corridor Specific Plan was adopted by the City Council on August 21, 1990 (Resolution 90-328), and

WHEREAS, The City Council has amended the Specific Plan from time to time in response to market changes or to improve efficiency, and

WHEREAS, The proposed amendments to Specific Plan Appendix A, Table A-2, attached, will make the Specific Plan more flexible and responsive to proposed tenants and will help keep buildings occupied and thereby promote economic stability, and

WHEREAS, All development within the Specific Plan will be consistent with and participate in the area's Finance and Implementation Plan, and therefore, the proposal is consistent with the City's infrastructure master plans and will pay their required fair share of such plans,

WHEREAS, The permitted land uses and their potential intensity is consistent with the policies of the General Plan, and therefore, the proposal is consistent with the General Plan, and

WHEREAS, The Planning Commission conducted a public hearing to consider the proposed amendment and recommended that the City Council approve the amendment on November 18, 2009, and

WHEREAS, The City Council conducted a public hearing to consider the proposed amendment on December 15, 2009, and

WHEREAS, The project is consistent with the General Plan Environmental Impact Report, and therefore, in accordance with CEQA Guidelines Section 15183, no further environmental assessment is required;

NOW, THEREFORE, BE IT RESOLVED, that the City Council does hereby approve the proposed amendment to the I-205 Corridor Specific Plan, Appendix A, Table A-2, attached as Exhibit 1.

.

* * * * * * * *

The foregoing Resolution 2009-242 was adopted by the City Council on the 15th day of December, 2009, by the following vote:

AYES: COUNCIL MEMBERS: ABERCROMBIE, MACIEL, TOLBERT, TUCKER
NOES: COUNCIL MEMBERS: NONE
ABSENT: COUNCIL MEMBERS: IVES
ABSTAIN: COUNCIL MEMBERS: NONE

Mayor Pro Tem

ATTEST:

City Clerk

**Exhibit 1**

TABLE A-2

PERMITTED AND CONDITIONALLY PERMITTED COMMERCIAL AND INDUSTRIAL USES

| | CC | GC | SC | FC | LI |
|---|---|---|---|---|---|
| Business Services<br>e.g., reproduction, delivery, repair services | | | P | | C |
| Day Care Centers<br>e.g., community care facilities | P | P | P | | C |
| Eating & Drinking Establishments<br>e.g., restaurants, bars | P | P | P | P | |
| Equipment Rental and Sales | | | P | | C |
| Gas & Service Stations | C | C | C | P | C |
| Hydrocarbon Resources Extraction | C | C | C | C | C |
| Lodging<br>e.g., hotels, motels | C | P | | P | |
| Manufacturing & Processing | | | C | | P |
| Mini Storage | | | P | | P |
| Outdoor Sales or Display of Merchandise<br>e.g., lumber yards, nurseries, etc. | | C | C | | C |
| Offices<br>e.g., Medical, dental, business, professional, banks, financial services | P | P | P | C | C |
| Park & Ride or Off-site Parking Facilities | C | C | C | C | C |
| Personal Services<br>e.g., nail, hair, tanning salons | P | P | | | |
| Places of Assembly<br>e.g., places of worship, private clubs and related uses | C | C | C | | C |
| Public Streets & Utilities | P | P | P | P | P |
| Recreational Uses<br>e.g., miniature golf, bowling alley, instructional or educational performing arts, gymnastics, etc. | P | C | P | | |
| Residential Uses | See Table A-1 | | | | |
| Retail and Consumer Services<br>e.g., building materials and hardware stores, garden center, clothing and show stores, department stores, drug stores and grocery stores | P | P | P | | |
| Schools<br>e.g., public, private, trade, vocational, etc. | C | P | C | | C |
| Temporary Uses as Permitted in TMC Sec. 10.08.4240 | TUP | TUP | TUP | TUP | TUP |
| Vehicle Sales, Service, & Rental (1) | | C | C | | |
| Warehouse & Distribution | | | C | | P |

Note: Accessory uses shall be allowed as provided in the Tracy Municipal Code.

RESOLUTION 2011-211

APPROVING A GENERAL PLAN AMENDMENT (GPA09-0002),
I-205 CORRIDOR SPECIFIC PLAN AMENDMENT (SPA10-0002),
AND ANNEXATION (A/P09-0002), FOR THE
FILIOS/DOBLER ANNEXATION AND DEVELOPMENT PROJECT

WHEREAS, Applications have been filed or initiated for a General Plan Amendment to re-designate approximately 43 acres from Urban Reserve 2 to Commercial, amend the I-205 Corridor Specific Plan to add the site to the Specific Plan with a designation of General Commercial, and Annex the site to the Tracy City limits (Exhibit 1), (collectively, the "Project"), and

WHEREAS, The Project would be an expansion of the I-205 regional commercial corridor, providing consumer shopping opportunities, commercial services, jobs, and tax revenue for City services, and

WHEREAS, The Project will have access to City services by extension of existing utilities and payment of a proportionate share of costs for expansion of utility and service systems, and

WHEREAS, The site is located within the City's Sphere of Influence and designated Urban Reserve 2 by the General Plan, the Profile for which includes a mix of commercial and office development, and

WHEREAS, LAFCo's review of the City's Municipal Services Review and Sphere of Influence is currently underway and anticipated to be complete in early 2012, and

WHEREAS, The City determined that the Project requires review pursuant to the California Environmental Quality Act (CEQA), and pursuant to CEQA, an Environmental Impact Report (EIR) was prepared to evaluate the potential environmental effects of the Project, to evaluate potential alternatives to the Project, and to evaluate and recommend mitigation measures for all potentially significant impacts of the Project, and

WHEREAS, The Planning Commission conducted a public hearing to receive public input and review the Project on September 28, 2011, and

WHEREAS, The City Council conducted a public hearing to receive public input and review the Project on November 1, 2011, and

NOW, THEREFORE, BE IT RESOLVED by the City Council as follows:

1. <u>Environmental Impact Report</u>

. In accordance with CEQA, the City Council has taken the following actions in regard to the Project:

a. Certified the EIR;
b. Made findings relating to significant impacts, alternatives, and Statement of Overriding Considerations; and
c. Adopted a Mitigation Monitoring and Reporting Program.

2. General Plan Amendment (GPA09-0002)

The City Council adopts the findings and recommendation of the Planning Commission and approves the General Plan Amendment, re-designating the Project site from Urban Reserve 2 to General Commercial.

3. Specific Plan Amendment (SPA10-0002)

a. The City Council finds as follows:

i. The Specific Plan Amendment to add the Project site to the Specific Plan area and designate it General Commercial is consistent with the goals, actions and policies of the Specific Plan and with its purposes, standards and land use guidelines. The Specific Plan was adopted in 1990 to promote economic development along the City's major transportation route. One design goal of the Specific Plan is that the "[p]lan area shall be designed to provide large commercial and industrial sites to attract needed retail and commercial uses to serve the whole town and surrounding region." (Specific Plan, section 2.1.1.) Another design goal of the Specific Plan is that "[r]etail land uses needing and benefiting from the freeway shall be given priority sites. Less extensive services and industrial land uses shall require less proximity to freeway visibility." (Specific Plan, section 2.1.2.) The Specific Plan Amendment is consistent with these and other goals of the Specific Plan. Furthermore, all improvements of the Project will be required (through the Specific Plan development application review process) to conform to all applicable provisions of the Specific Plan, including those for parking, landscaping, shade coverage, driveway location and design, floor area ratio and utilities. For additional discussion as to the Amendment's consistency with the Specific Plan, please see section 4.2 of the Draft EIR (Land Use and Planning).

ii. The Specific Plan Amendment will help achieve a balanced community of all races, age groups, income levels and ways of life.

iii. The Specific Plan Amendment results in development of desirable character which will be compatible with existing and proposed development in the surrounding neighborhood. The designation of the site to General Commercial will contribute to the regional draw for customers seeking consumer retail shops and services. The Specific Plan Amendment will promote the most appropriate development of property within the vicinity by helping to draw customers to the area, thus promoting a synergistic effect of the commercial district already established by the West Valley Mall, Walmart, restaurants, hotels, and other nearby commercial businesses. The Specific Plan Amendment will also result in the extension of and other improvements to Grant Line Road in the vicinity of the Project.

iv. The Specific Plan Amendment contributes to a balance of land uses that will enable local residents to work and shop within the Tracy Planning Area. Populations along the I-205 corridor are increasing and many of the people who make their homes in the area need and desire general commercial and retail services. The Specific Plan Amendment would allow the placement of such services closer to this population base.

v. As outlined in the EIR, the Specific Plan Amendment respects the environmental and aesthetic assets of the community consistent with economic realities.

vi. The Specific Plan Amendment incorporates, where feasible, active and passive energy conservation measures. Populations along the I-205 corridor, are increasing and many of the people who make their homes in the area need and desire general commercial and retail services. The Specific Plan Amendment would allow the placement of such services closer to this population base and therefore reduce the number and length of automobile trips. The Sustainability Action Plan items required specifically for this Project through the EIR (Attachment 1), furthermore, will reduce energy consumption and result in energy efficiency by encouraging carpooling, energy efficient light fixtures, and other measures.

b. The City Council approves the Specific Plan Amendment to (1) add the approximately 43-acre Project site to the Specific Plan area, (2) designate the site General Commercial, and (3) add Section 4.1.2.2 K to the Specific Plan to include specific Sustainability Action Plan and EIR mitigation measures to apply to the Filios/Dobler Project site (Exhibit 2).

4. Annexation of the Site (A/P09-0002)

The City Council adopts the findings and recommendation of the Planning Commission and authorizes an application to the Local Agency Formation Commission of San Joaquin County for jurisdictional annexation to the City of Tracy.

* * * * * * * * * * * *

The foregoing Resolution 2011-211 was adopted by the Tracy City Council on the 1st day of November, 2011, by the following vote:

| | | |
|---|---|---|
| AYES: | COUNCIL MEMBERS: | ABERCROMBIE, ELLIOTT, MACIEL, RICKMAN, IVES |
| NOES: | COUNCIL MEMBERS: | NONE |
| ABSENT: | COUNCIL MEMBERS: | NONE |
| ABSTAIN: | COUNCIL MEMBERS: | NONE |

MAYOR

ATTEST:

CITY CLERK

EXHIBIT 1

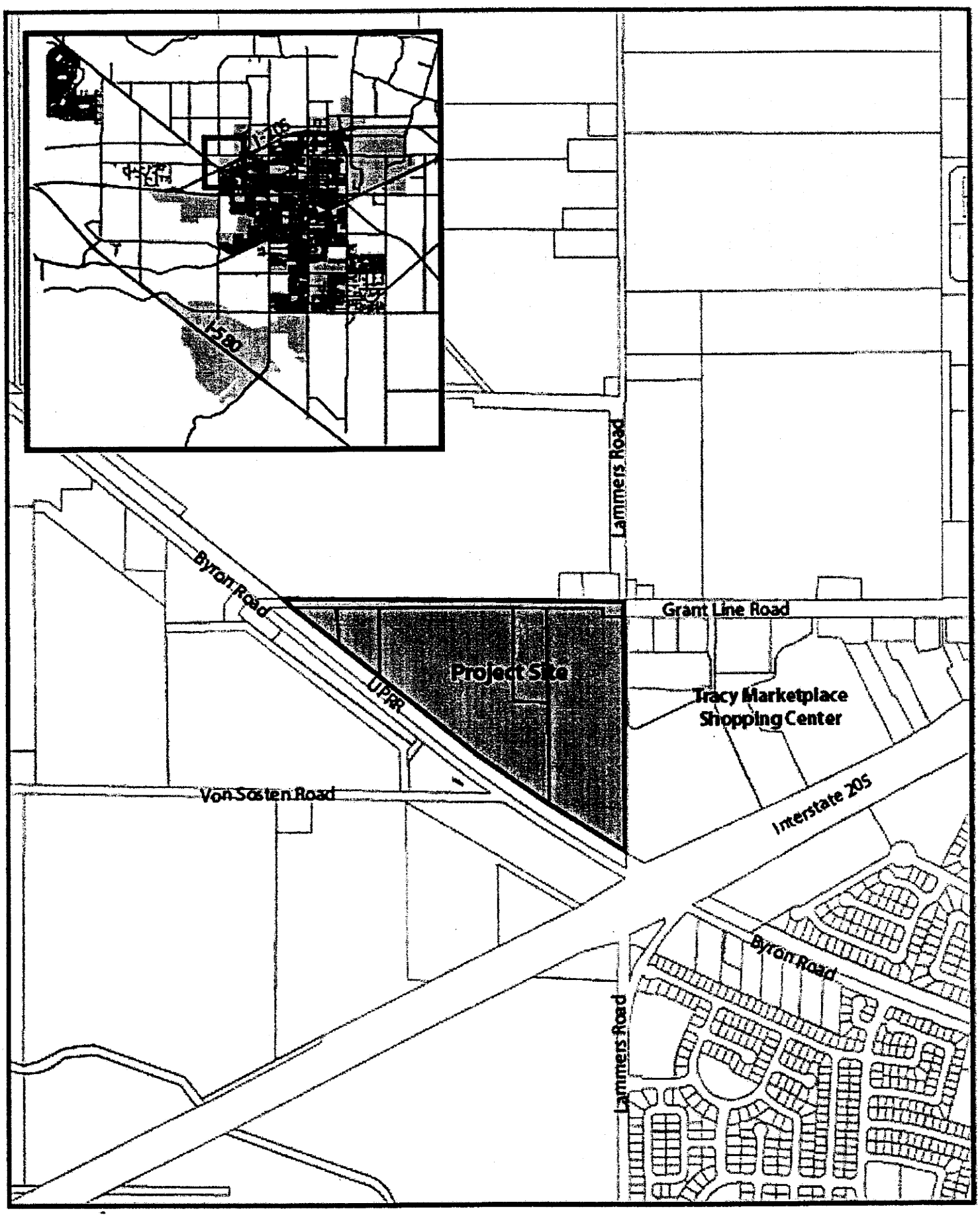
I-580
Lammers Road
Byron Road
Grant Line Road
Project Site
UPRR
Tracy Marketplace
Shopping Center
Von Sosten Road
Interstate 205
Byron Road
Lammers Road

RESOLUTION 2012-085

AMENDING THE I-205 CORRIDOR SPECIFIC PLAN MODIFYING THE CRITERIA FOR WALL SIGNS IN EXCESS OF 100 SQUARE FEET. APPLICATION NUMBER SPA12-0001

WHEREAS, The I-205 Corridor Specific Plan contains standards for wall signs, such that the area of any single wall sign shall not exceed 100 square feet, except that single-tenant buildings may have a wall sign up to 250 square feet with a Conditional Use Permit subject to certain criteria,

WHEREAS, The City received a proposal for wall signs exceeding 100 square feet on a multi-tenant building on March 1, 2012 (Application Number CUP12-0002), and

WHEREAS, An amendment to the I-205 Corridor Specific Plan is required to permit wall signs exceeding 100 square feet with a Conditional Use Permit on multi-tenant buildings, and

WHEREAS, The project is exempt from the California Environmental Quality Act pursuant to CEQA Guidelines Section 15183, where no further environmental assessment is necessary, and

WHEREAS, The Planning Commission conducted a public hearing to review and consider Specific Plan amendment application number SPA12-0001 on April 11, 2012 and recommended that the City Council approve the amendment, and

WHEREAS, The City Council conducted a public hearing to consider the proposed amendment on May 1, and May 15, 2012, and

WHEREAS, The City Council determined that the criteria established for evaluating wall signs in excess of 100 square feet, for purposes of approving or denying a Conditional Use Permit on such proposed signs, shall be modified to apply to both single and multi-tenant buildings, because the established criteria for obtaining a Conditional Use Permit for wall signs exceeding 100 square feet will be sufficient to ensure wall signs are kept to an appropriate size in proportion to the building for both single and multi-tenant buildings;

NOW, THEREFORE BE IT RESOLVED, That City Council does hereby approves application number SPA12-0001, an amendment to the I-205 Corridor Specific Plan Section 4.1.2.2.G.10.ii, based on the findings below, to read as follows:

"Wall Signs:

Location: Signs should be located immediately above or adjacent to the primary building entrance of a commercial establishment. Signs should be located visually centered horizontally and vertically within the building fascia.

Size: The total sign area of all sign types shall not exceed one half square foot per lineal foot of building frontage. Where individually lettered wall signs comprise over 50 percent of the total signage, the total sign area shall not exceed 1.2 square feet per lineal foot of building frontage. The area of any single wall sign shall not exceed 100 square feet; however, a wall sign of up to 250 square feet may be allowed upon Conditional Use

Permit approval which demonstrates that the size of the sign is appropriate in scale with the building face on which it is proposed.

Length: The length of any single sign shall not exceed 75 percent of the width of the building face on which the sign is proposed."

Findings:

The amendment is consistent with the goals, actions, and policies of the General Plan and the I-205 Corridor Specific Plan and with its purposes, standards, and guidelines; will result in development of desirable character, which will be compatible with the existing and future development in the Specific Plan area; contributes to a balance of land uses that will enable local residents to work and shop within the Tracy Planning Area; and respects the environmental and aesthetic assets of the community consistent with economic realities. The Specific Plan amendment is minor in nature, focusing solely on wall signs with minimal impact on the build out of the Specific Plan. The Specific Plan amendment will be compatible with existing and proposed neighboring development because it poses only minor modifications to the Specific Plan signage requirements within the I-205 Corridor Specific Plan area to support economic development while respecting the aesthetic assets of the community.

* * * * * * * * * * * * * * * * * * * *

The foregoing Resolution 2012-085 was adopted by the Tracy City Council on the 15th day of May, 2012, by the following vote:

| | | |
|---|---|---|
| AYES: | COUNCIL MEMBERS: | ABERCROMBIE, ELLIOTT, MACIEL, RICKMAN, IVES |
| NOES: | COUNCIL MEMBERS: | NONE |
| ABSENT: | COUNCIL MEMBERS: | NONE |
| ABSTAIN: | COUNCIL MEMBERS: | NONE |

MAYOR

ATTEST:

CITY CLERK

RESOLUTION 2012-092

APPROVING AN AMENDMENT TO THE I-205 CORRIDOR SPECIFIC PLAN
WITH REGARD TO FREEWAY SIGNS;
APPLICATION NUMBER SPA12-0002

WHEREAS, The City Council adopted the I-205 Corridor Specific Plan and certified its Environmental Impact Report on August 21, 1990, and approved a subsequent Negative Declaration on July 6, 1999, and the City Council certified the 2006 General Plan EIR on July20, 2006, and

WHEREAS, JS Kendall Construction, Inc., on behalf of the Tracy Marketplace, submitted an application for an amendment to the I-205 Corridor Specific Plan to allow for freeway signs within the Specific Plan to be larger than 300 square feet in area, and

WHEREAS, The Planning Commission conducted a public hearing to review and consider the application on April 25, 2012, and, by adoption of a resolution recommended City Council approval of the proposed amendment;

NOW, THEREFORE BE IT RESOLVED, The City Council approves application number SPA12-0002, an amendment to the I-205 Corridor Specific Plan Section 4.1.2.2.G.11, based on the findings below, to read as follows:

> "Each commercial center may have one freeway identification sign. Prior to the construction of a new freeway identification sign, a Conditional Use Permit must be granted by the Planning Commission. Prior to any additions or changes to an existing freeway identification sign, a sign permit must be obtained from the Development Services Director. The sign may identify any tenant(s) located within 700 feet of the freeway on any parcel within the center. Maximum height shall be 15 feet above the crown of the nearest freeway, not to exceed 45 feet above finished site grade. Maximum sign area shall be 400 feet per sign face with a maximum of two sign faces."

Findings:

The amendment is consistent with the goals, actions, and policies of the General Plan and the I-205 Corridor Specific Plan and with its purposes, standards, and guidelines; will result in development of desirable character, which will be compatible with the existing and future development in the Specific Plan area; contributes to a balance of land uses that will enable local residents to work and shop within the Tracy Planning Area; and respects the environmental and aesthetic assets of the community consistent with economic realities. The Specific Plan amendment is minor in nature, focusing solely on freeway signs with minimal impact on the build out of the Specific Plan. The Specific Plan amendment will be compatible with existing and proposed neighboring development because it poses only minor modifications to the Specific Plan signage requirements within the I-205 Corridor Specific Plan area to support economic development while respecting the aesthetic assets of the community.

**********

The foregoing Resolution 2012-092 was adopted by the Tracy City Council on the 15th day of May, 2012, by the following vote:

| | | |
|---|---|---|
| AYES: | COUNCIL MEMBERS: | ABERCROMBIE, ELLIOTT, MACIEL, RICKMAN, IVES |
| NOES: | COUNCIL MEMBERS: | NONE |
| ABSENT: | COUNCIL MEMBERS: | NONE |
| ABSTAIN: | COUNCIL MEMBERS: | NONE |

MAYOR

ATTEST:

CITY CLERK

RESOLUTION 2012-254

AMENDING THE I-205 CORRIDOR SPECIFIC PLAN, APPENDIX A, TABLE A-2, PERMITTED AND CONDITIONALLY PERMITTED LAND USES, RELATING TO EATING AND/OR DRINKING ESTABLISHMENTS WITH ENTERTAINMENT

WHEREAS, The City of Tracy's I-205 Corridor Specific Plan permits eating and drinking establishments in areas designated Commercial Center, General Commercial, Service Commercial, and Freeway Commercial; and

WHEREAS, An eating and/or drinking establishment with entertainment is a use not listed in the I-205 Corridor Specific Plan; and

WHEREAS, The City Council desires to amend the I-205 Corridor Specific Plan to authorize eating and/or drinking establishments with entertainment as a permitted use or conditionally permitted use in particular designated areas; and

WHEREAS, The proposed amendments are not a project within the meaning of the California Environmental Quality Act because it does not have the potential for causing a significant effect on the environment (CEQA Guidelines, 14 California Code of Regulations, §15061(b).); and

WHEREAS, The Planning Commission considered this matter at a duly noticed public hearing held on November 14, 2012 and recommended that City Council approve the proposed amendments; and

WHEREAS, The City Council held a duly noticed public hearing to consider the proposed amendments on December 18, 2012;

NOW, THEREFORE, BE IT RESOLVED, that the City Council does hereby approve the proposed amendment to the I-205 Corridor Specific Plan, Appendix A, Table A-2, attached as Exhibit 1.

* * * * * * * * * * * * * * * * * * * * * * * *

The foregoing Resolution 2012-254 was adopted by the Tracy City Council on the 18th day of December 2012, by the following vote:

| | | |
|---|---|---|
| AYES: | COUNCIL MEMBERS: | MACIEL, RICKMAN, YOUNG, IVES |
| NOES: | COUNCIL MEMBERS: | NONE |
| ABSENT: | COUNCIL MEMBERS: | NONE |
| ABSTAIN: | COUNCIL MEMBERS: | NONE |

MAYOR

ATTEST:

CITY CLERK

# I-205 Corridor Specific Plan Amendment

Exhibit 1

**Table A-2 of Appendix A of the I-205 Corridor Specific Plan is amended as follows:**

- The use listed as "Eating & Drinking Establishment" in Table A-2 is amended to read as follows and is shown as permitted ("P") in CC, GC, SC, and FC designated areas:

  Eating and/or drinking establishment (with or without entertainment[2]), without serving alcohol and providing entertainment[2] after 11:00 p.m.

- The following use is added to Table A-2 and shown as conditionally permitted ("C") in CC, GC, SC, and FC designated areas:

  Eating and/or drinking establishment that serves alcohol and provides entertainment[2] after 11:00 p.m.

- The Note at the bottom of Table A-2 is renamed "Note 1" and Note 2 is added below Note 1 to state the following:

  Note 2: "Entertainment" means such uses as live music, disc jockeys, dancing, karaoke, comedy shows, modeling, or live performances.

RESOLUTION 2013-031

APPROVING TWO AMENDMENTS TO THE I-205 CORRIDOR SPECIFIC PLAN: AMEND THE LAND USE DESIGNATION FROM GENERAL COMMERCIAL TO HIGH DENSITY RESIDENTIAL FOR APPROXIMATELY 10.8 ACRES LOCATED ON THE NORTH SIDE OF PAVILION PARKWAY, AT THE NORTHWEST CORNER OF PAVILION PARKWAY AND ROBERTSON DRIVE, ASSESSOR'S PARCEL NUMBERS 212-280-02 AND 15; AND AMEND SECTION 4.1.1.3.B.2 TO CHANGE THE MAXIMUM DENSITY IN THE HIGH DENSITY RESIDENTIAL DESIGNATION FROM 19 UNITS PER ACRE TO 25 UNITS PER ACRE APPLICATION NUMBER SPA12-0004

WHEREAS, The site was designated General Commercial by the I-205 Corridor Specific Plan in 2007 as part of the Winco project, and

WHEREAS, An application has been initiated to amend the Specific Plan designation of the site from General Commercial to High Density Residential as part of a development application to construct a 300-unit apartment project on the site, and

WHEREAS, The Specific Plan amendments are consistent with the General Plan, because the permitted uses of the Specific Plan's High Density Residential designation are allowed within the General Plan designation of Residential High and are consistent with goals and policies of the Housing Element. Also, the Specific Plan's Design Standards and Guidelines, particularly related to siting requirements (site planning, architecture, and parking) and design standards (transitions/edges, commercial interface, auxiliary site features, fencing and walls) are consistent with Land Use and Community Character Element goals and policies, and

WHEREAS, The General Plan identifies apartments, specifically, among the "characteristic housing" for property designated Residential High, in the density range from 12.1 to 25 units per gross acre. The Specific Plan is consistent with the General Plan in that it, too, identifies apartments (and other similar uses as the General Plan) as permitted uses in the High Density Residential designation. The amendment to the permitted density (from a maximum of 19 units per acre to 25 units per acre), therefore, is consistent with the General Plan, and

WHEREAS, The project site is part of the I-205 Corridor Specific Plan Finance and Implementation Plan (FIP), originally adopted in 1990 and subsequently amended. The project site is subject to the FIP's development impact fees and other infrastructure mitigation requirements to mitigate the Project's fair share of infrastructure costs required by the City's infrastructure master plans.

WHEREAS, The Planning Commission conducted a public hearing to review the Specific Plan amendments on January 23, 2013 and recommended approval of the amendments to the City Council, and

WHEREAS, On February 19, 2013, the City Council conducted a public hearing to review the proposed Specific Plan amendments, and

WHEREAS, On February 19, 2013, the City Council approved an Addendum to the Winco Environmental Impact Report (SCH#2003102045) for the project;

NOW, THEREFORE, BE IT RESOLVED, That the Tracy City Council approves the I-205 Corridor Specific Plan designation amendment from General Commercial to High Density Residential for the 10.8-acre site described above, and approves the change to the maximum density allowed in the High Density Residential designation (Section 4.1.1.3.B.2) from 19 to 25 dwelling units per acre.

**************

The foregoing Resolution 2013-031 was adopted by the Tracy City Council on the 19th day of February, 2013, by the following vote:

| | | |
|---|---|---|
| AYES: | COUNCIL MEMBERS: | MACIEL, MANNE, YOUNG, IVES |
| NOES: | COUNCIL MEMBERS: | RICKMAN |
| ABSENT: | COUNCIL MEMBERS: | NONE |
| ABSTAIN: | COUNCIL MEMBERS: | NONE |

MAYOR

ATTEST:

CITY CLERK