Holly Sugar Sports Park

Notice of Preparation and Initial Study

December 24, 2008

Prepared for:

City of Tracy
Department of Development and Engineering Services
333 Civic Center Plaza, Tracy, California 95376

Prepared by:

De Novo Planning Group

A Land Use Planning, Design, and Environmental Firm

4630 Brand Way, Sacramento, California 95819

NOTICE OF PREPARATION

FOR THE

HOLLY SUGAR SPORTS PARK PROJECT

DECEMBER, 2008

Prepared for:

City of Tracy
Department of Development and Engineering Services
333 Civic Center Plaza
Tracy, CA 95376

Prepared by:

De Novo Planning Group
4630 Brand Way
Sacramento, CA 95819
(916) 949-3231

NOTICE OF PREPARATION

TO: State Clearinghouse
State Responsible Agencies
State Trustee Agencies
Other Public Agencies
Interested Organizations

FROM: Scott Claar, Associate Planner
City of Tracy
333 Civic Center Plaza
Tracy, CA 95376
(209) 831-6400

SUBJECT: Notice of Preparation –Holly Sugar Sports Park Draft EIR

EIR CONSULTANT

Ben Ritchie
De Novo Planning Group
4630 Brand Way
Sacramento, CA 95819
(916) 949-3231

An Initial Study has been prepared for the project and is attached to this Notice of Preparation (NOP). The Initial Study lists those issues that will require detailed analysis and technical studies that will need to be evaluated and/or prepared as part of the EIR. The EIR will consider all potential environmental effects of the proposed project to determine the level of significance of the environmental effect, and will analyze these potential effects to the detail necessary to make a determination on the level of significance.

Those environmental issues that have been determined to be less than significant will have a discussion that is limited to a brief explanation of why those effects are not considered potentially significant. In addition, the EIR may also consider those environmental issues which are raised by responsible agencies, trustee agencies, and members of the public or related agencies during the NOP process.

We need to know the views of your agency or organization as to the scope and content of the environmental information germane to your agency's statutory responsibilities or of interest to your organization in connection with the proposed project. Specifically, we are requesting the following:

1. If you are a public agency, state if your agency will be a responsible or trustee agency for the project and list the permits or approvals from your agency that will be required for the project and its future actions;
2. Identify significant environmental effects and mitigation measures that you believe need to be explored in the EIR with supporting discussion of why you believe these effects may be significant;

3. Describe special studies and other information that you believe are necessary for the City of Tracy to analyze the significant environmental effects, alternatives, and mitigation measures you have identified;
4. Provide the name, title, and telephone number of the contact person from your agency or organization that we can contact regarding your comments;

Due to the time limits mandated by State law, your response must be sent and received by the City of Tracy by the following deadlines:

- For responsible agencies, not later than 30 days after you receive this notice,
- For all other agencies and organizations, not later than 30 days following the publication of this Notice of Preparation. The 30 day review period ends on January 29, 2009.

If we do not receive a response from your agency or organization, we will presume that your agency or organization has no response to make.

A responsible agency, trustee agency, or other public agency may request a meeting with the City of Tracy or its representatives in accordance with Section 15082(c) of the CEQA Guidelines. A public scoping meetings will be held during the NOP public review period.

A public scoping meeting to receive comments on the NOP will be held Thursday, January 15, 2009, 7:00 p.m., at City Hall Conference Room 203 (Second Floor), 333 Civic Center Plaza, Tracy.

Please send your response to my attention at the City of Tracy, Department of Development and Engineering Services, City of Tracy, 333 Civic Center Plaza, Tracy, CA 95376.

If you have any questions, please contact me at (209) 831-6400.

Date: _____, 2008 _____ Scott Claar, Associate Planner

INITIAL STUDY

FOR THE

HOLLY SUGAR SPORTS PARK PROJECT

DECEMBER, 2008

Prepared for:

City of Tracy
Department of Development and Engineering Services
333 Civic Center Plaza
Tracy, CA 95376

Prepared by:

De Novo Planning Group
4630 Brand Way
Sacramento, CA 95819
(916) 949-3231

TABLE OF CONTENTS

INITIAL STUDY CHECKLIST 1
Project Location and Setting 1
Project Description 2
Figure 1- Regional Location 5
Figure 2- Project Vicinity 7
Figure 3- Site Boundary 9
Figure 4- Detailed Site Plan 11
Environmental Factors Potentially Affected: 13
Determination: 13
Environmental Checklist 16
I. AESTHETICS 16
II. AGRICULTURE RESOURCES 18
III. AIR QUALITY 19
IV. BIOLOGICAL RESOURCES 20
V. CULTURAL RESOURCES 22
VI. GEOLOGY AND SOILS 23
VII. HAZARDS AND HAZARDOUS MATERIALS 25
VIII. HYDROLOGY AND WATER QUALITY 28
IX. LAND USE AND PLANNING 30
X. MINERAL RESOURCES 31
XI. NOISE 32
XII. POPULATION AND HOUSING 33
XIII. PUBLIC SERVICES 34
XIV. RECREATION 35
XV. TRANSPORTATION/TRAFFIC 36
XVI. UTILITIES AND SERVICE SYSTEMS 37
XVII. MANDATORY FINDINGS OF SIGNIFICANCE 38

This page left intentionally blank.

INITIAL STUDY CHECKLIST

PROJECT TITLE

Holly Sugar Sports Park

LEAD AGENCY NAME AND ADDRESS

City of Tracy
333 Civic Center Plaza
Tracy, CA 95376

CONTACT PERSON AND PHONE NUMBER

Scott Claar, Associate Planner
Development and Engineering Services Department
City of Tracy
(209) 831-6400

PROJECT SPONSOR'S NAME AND ADDRESS

City of Tracy
333 Civic Center Plaza
Tracy, CA 95376

PROJECT LOCATION AND SETTING

The project site is located in San Joaquin County, immediately north of the City limits of Tracy, but within the City's Sphere of Influence as shown in Figures 1 and 2.

The project site consists of approximately 282 acres of land located between Tracy Boulevard and Corral Hollow Road north of Larch Road, and south of Sugar Road. The City owns approximately 1,200 acres of property north of the Larch Road developments between Corral Hollow Road and Tracy Boulevard and generally between Corral Hollow Road, Holly Road and Sugar Cut, north of Arbor Road, as shown in Figure 2.

The project site is currently undeveloped and is used for agricultural purposes. There are several irrigation canals that traverse the project site which are currently used to convey non-potable water to the site and the surrounding properties. The western portion of the project site is traversed by PG&E power transmission lines with towers, and a 12-inch diameter underground gas pipeline.

Lands to the north, west and east of the project site are agricultural lands, with a few scattered residences. Land to the south of the project site consists of rural residential development. The surrounding lands can be seen in Figure 3.

GENERAL PLAN AND ZONING DESIGNATIONS

The project site is designated as Agricultural (AG) land by both the City of Tracy General Plan Land Use Designations Map and the San Joaquin County General Plan Land Use Designations

Map. The County zoning designation for the project site is Agriculture (AG-40). The project site does not have an assigned zoning designation from the City of Tracy, as the project site is currently located outside of the City limits.

PROJECT DESCRIPTION

The proposed project consists of the construction and operation of an approximately 282-acre park, which would include an approximately 150-acre active sports park facility, approximately 86 acres of land south of the proposed sports park for passive recreational uses and an approximately 46-acre area to the northwest of the active sports park site as a future expansion area, as shown in Figure 3.

The proposed project has been designed to address the community's short-, medium-, and long-term needs for youth sports park facilities. The project would be constructed in phases, as described in greater detail below. The project proposes to ultimately construct up to 16 soccer fields of various sizes for various age groups, up to 18 baseball fields of various sizes for various age groups, up to five softball fields of various sizes for various age groups, up to four football fields, one football/soccer stadium, and up to three play areas. The project site will also include several restroom facilities, concession facilities, bleachers, and parking areas.

The proposed football/soccer stadium, located near the western boundary of the site would include stadium lighting, a public address (PA) system, and synthetic field turf. The remainder of the proposed football, baseball, softball, and soccer fields would be natural grass turf.

At the time of the preparation of this Initial Study, a detailed lighting plan and the location of all proposed exterior lighting features has not been finalized. However, for the purposes of this environmental analysis, it is anticipated that several of the "full-sized" fields will include outdoor lighting systems. More details regarding the proposed outdoor lighting systems will be available in the EIR prepared for this project.

A detailed site plan of the 150-acre active sports park facility is presented in Figure 4.

The 86-acre passive recreation area to the south of the active sports park site would serve as a buffer between the more developed park uses and the rural residences to the south of the park site. This area may be used for passive recreational activities such as walking and biking trails, bocce ball, disc golf, or an arboretum. No structures or athletic fields are currently proposed for this area.

The 46-acre future expansion parcel to the northwest of the 150-acre active sports park site may be developed in the future as the demand for developed park facilities in the City of Tracy increases. While no specific uses for this future expansion area have been proposed at this time, the site may be suitable for the future development of facilities such as a skate park, paint-ball, volleyball (sand, grass, hard court), bocce ball, BMX park, gymnasium, hard courts or additional athletic fields due to the fact that the parcel in question is not immediately adjacent to any sensitive residential land uses.

Infrastructure

Roadways: The project site would receive primary access from Tracy Boulevard, along the eastern boundary of the site, as shown in Figure 4. The project improvements include the construction of an access road connecting the site to Tracy Boulevard, which may require widening portions of Tracy Boulevard immediately adjacent to the site and the installation of a traffic light at the intersection of the project site and Tracy Boulevard. A future access road from Corral Hollow Road to the western boundary of the site would be constructed in the future, as the final phases of the western portion of the site are developed.

Wastewater: The on-site restroom facilities would connect via a lateral line to an existing sewer main line located within the right-of-way of Tracy Boulevard, which would convey the project's wastewater to the City's wastewater treatment plant for treatment.

Potable Water: The project site would receive potable water via a connection to an existing water main located on Tracy Boulevard, near Larch Road. Approximately 2,000 feet of water line will need to be installed on Tracy Boulevard, in addition to the installation of a water lateral on the site. Potable water would be supplied by the City of Tracy.

Landscape Irrigation Water: The initial phases of the project would receive landscaping and irrigation water from a proposed on-site well. The City is currently exploring options for the provision of non-potable water from alternative sources for future phases of park development.

Phasing

The proposed project would be developed in phases, with facility development beginning on the eastern portion of the site and progressing in a westerly direction. The first phase of project construction would include the installation of the project infrastructure described above, including the primary access road connecting the project site to Tracy Blvd. Phase I would include the construction of four soccer fields, two baseball fields and associated parking lot improvements in the eastern-most portion of the project site, as shown in Figure 4.

A detailed phasing plan for the proposed park has not been developed. Subsequent phases of park development will occur with funding availability. For the purposes of this Environmental Impact Report, it is assumed that all phases of the project will be developed within 25 years, or by approximately 2032.

Annexation and Pre-zoning

As described previously, the project site is currently located outside of the Tracy City limits, within the City's Sphere of Influence (SOI). In addition to the development of the proposed park facilities, the City is also proposing to pre-zone the project site for park use and to annex the site into the City of Tracy. The area proposed for annexation includes the 150-acre active sports park site, the 46-acre future expansion area, and the 86-acre passive recreation area, as shown in Figure 3.

General Plan Amendment

In addition to the proposed annexation and pre-zoning of the project site, the City of Tracy may also potentially amend the City's General Plan related to park uses and the Land Use Designation Map.

OTHER PUBLIC AGENCIES WHOSE APPROVAL IS REQUIRED (E.G., PERMITS, FINANCING APPROVAL, OR PARTICIPATION AGREEMENT)

The City of Tracy will be the Lead Agency for the proposed project, pursuant to the State Guidelines for Implementation of the California Environmental Quality Act (CEQA), Section 15050. This Initial Study identifies and discusses the environmental topics that are less than significant and do not require further detailed analysis in an EIR as well as those environmental topics that are potentially significant and require further detailed analysis in the EIR. The Initial Study and Notice of Preparation will be circulated for agency and public review for 30 days, pursuant to CEQA Guidelines, Section 15073(d).

The following agencies may be required to issue permits or approve certain aspects of the proposed project:

- San Joaquin Local Agency Formation Commission (LAFCO) - Approval of annexation request.
- Central Valley Regional Water Quality Control Board (CVRWQCB) - Storm Water Pollution Prevention Plan (SWPPP) approval prior to construction activities.
- San Joaquin Valley Air Pollution Control District (SJVAPCD) - Approval of construction-related air quality permits.

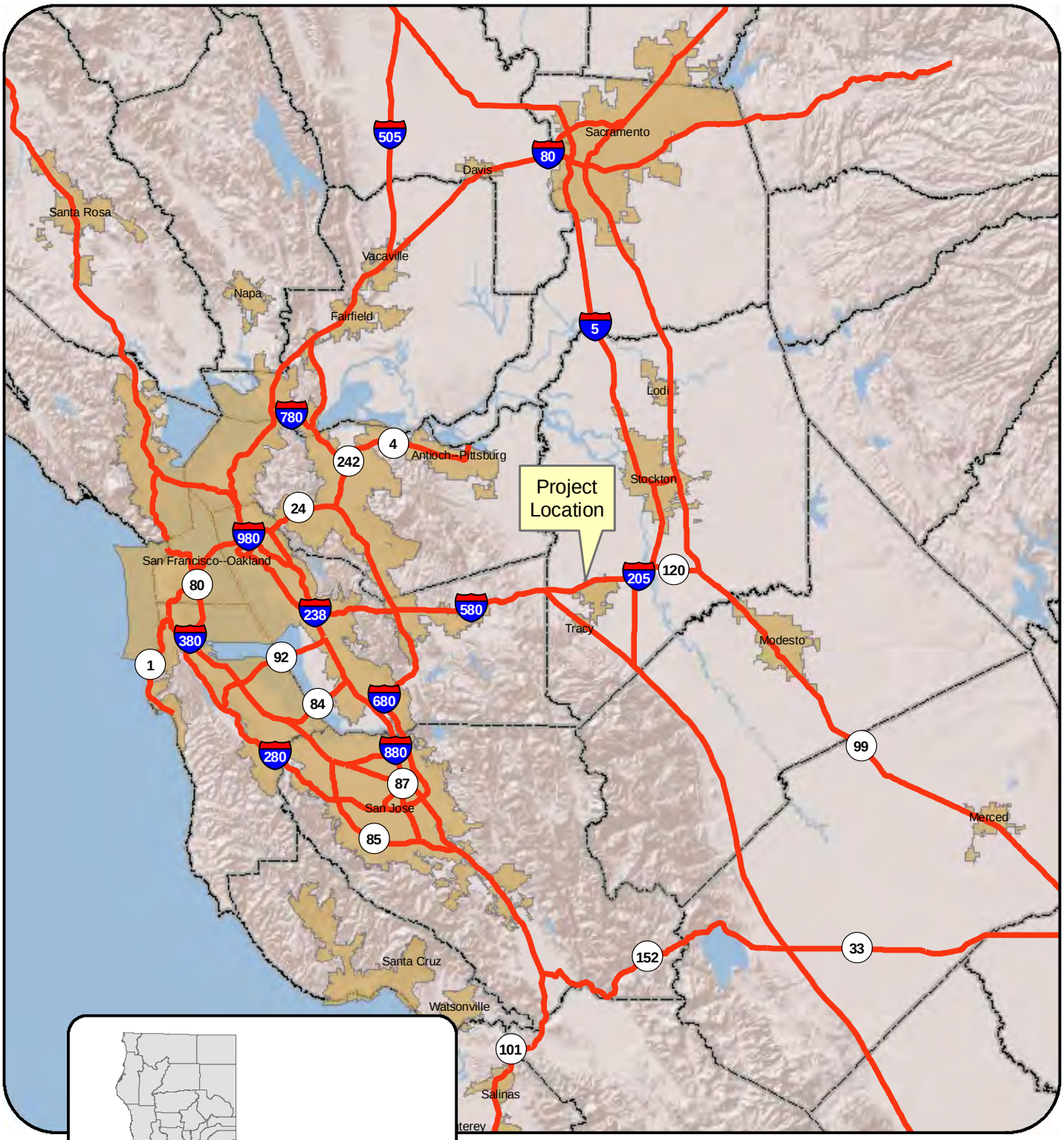

Figure 1. Project Location Map

N
W E
S

0 5 10 20 30 40 Miles

De Novo Planning Group

A Land Use Planning, Design, and Environmental Firm

November 12, 2008

This page left intentionally blank.

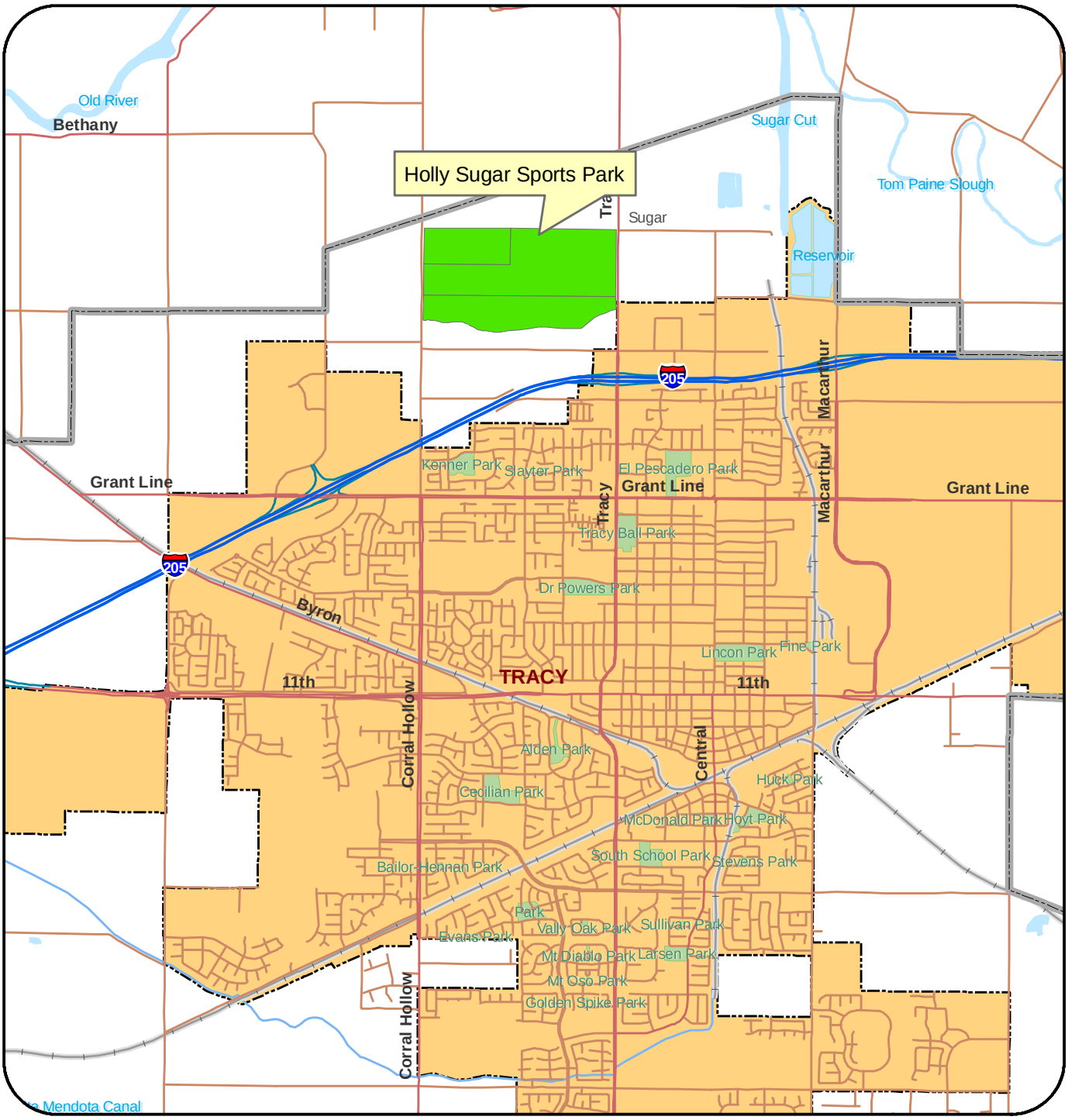

Figure 2. Project Vicinity Map

Holly Sugar Sports Park

City of Tracy

Sphere of Influence

N
W E
S

0 0.25 0.5 1 1.5 Miles

De Novo Planning Group

A Land Use Planning, Design, and Environmental Firm

December 20, 2008

This page left intentionally blank.

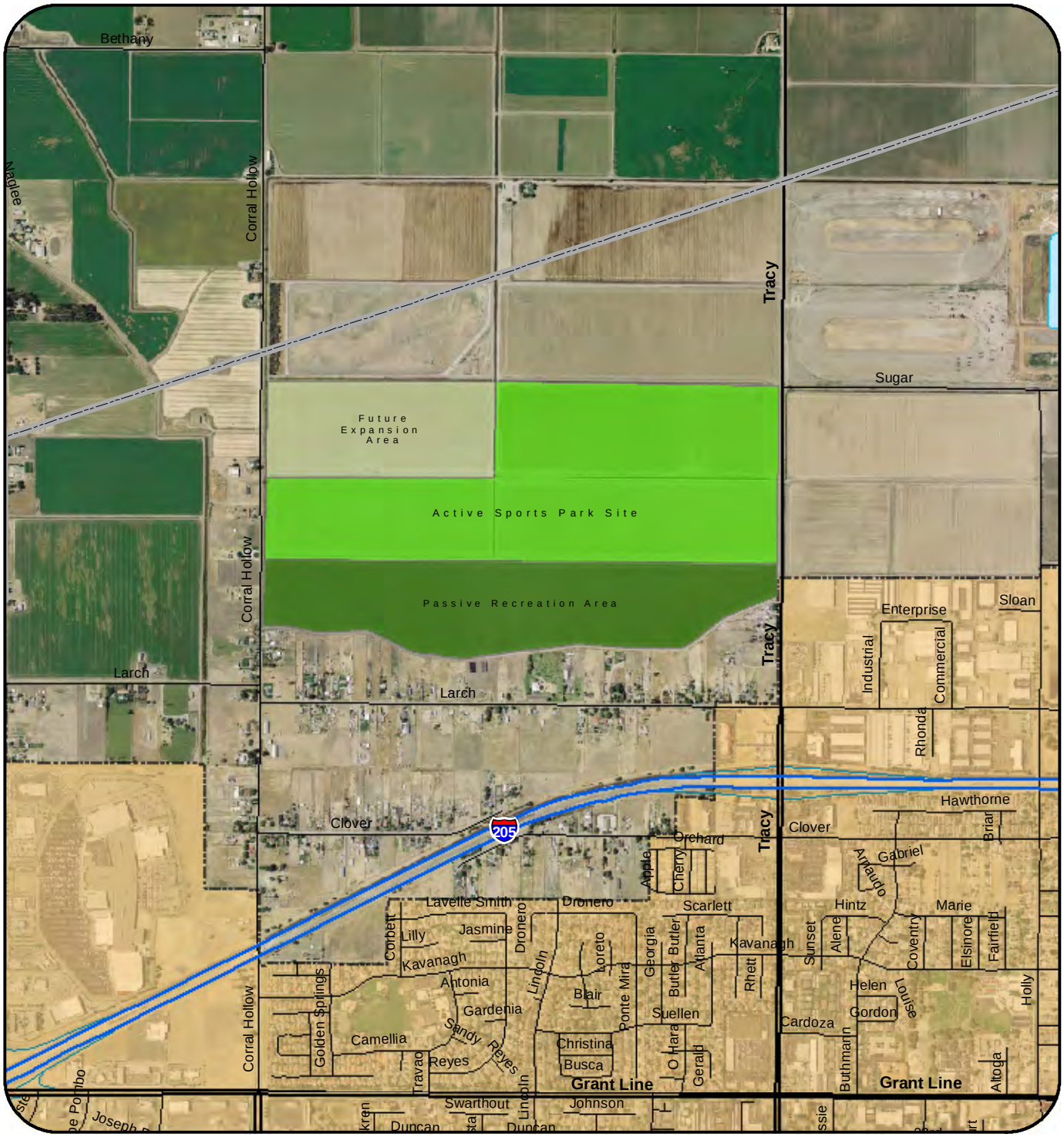

Figure 3. Project Site Map

De Novo Planning Group

A Land Use Planning, Design, and Environmental Firm

December 20, 2008

This page left intentionally blank

QTY	DESC.
4	U10 SOCCER FIELDS
3	U12 SOCCER FIELDS
7	U14-U19 SOCCER FIELDS
2	396' OUTFIELD BASEBALL FIELDS
10	220' BASEBALL FIELDS

QTY	DESC.
4	220' BASEBALL FIELDS (STADIUM)
4	200' SOFTBALL FIELDS
1	200' SOFTBALL FIELD (STADIUM)
4	FOOTBALL FIELDS
1	FOOTBALL / SOCCER FIELD (STADIUM)
4	PLAY AREAS

PARCEL A
FUTURE POTENTIAL USES:
PLANTING BUFFER
ARBORETUM
CLASS 1 BIKE PATH
TRAILS
DISC GOLF

NORTH

Conceptual Design
Holly Sugar Sports Park
City Of Tracy

Date: 11/05/08
Project No.: 0805100

VERDE DESIGN

LANDSCAPE ARCHITECTURE
CIVIL ENGINEERING
SPORT PLANNING & DESIGN
2453 The Alameda, Ste. 200
Santa Clara, CA 95050
tel: 408.985.7200
fax: 408.985.7260
www.verdedesigninc.com

Figure 4. Conceptual Design

This page left intentionally blank

ENVIRONMENTAL FACTORS POTENTIALLY AFFECTED:

The environmental factors checked below would be potentially affected by this project, involving at least one impact that is a "Potentially Significant Impact" as indicated by the checklist on the following pages.

X	Aesthetics	X	Agriculture Resources	X	Air Quality
X	Biological Resources	X	Cultural Resources	X	Geology / Soils
X	Hazards & Hazardous Materials	X	Hydrology / Water Quality	X	Land Use / Planning
	Mineral Resources	X	Noise		Population / Housing
X	Public Services	X	Recreation	X	Transportation /Traffic
X	Utilities / Service Systems	X	Mandatory Findings of Significance		

DETERMINATION:

On the basis of this initial evaluation:

	I find that the proposed project COULD NOT have a significant effect on the environment, and a NEGATIVE DECLARATION will be prepared.
	I find that although the proposed project could have a significant effect on the environment, there will not be a significant effect in this case because revisions in the project have been made by or agreed to by the project proponent. A MITIGATED NEGATIVE DECLARATION will be prepared.
X	I find that the proposed project MAY have a significant effect on the environment, and an ENVIRONMENTAL IMPACT REPORT is required.
	I find that the proposed project MAY have a "potentially significant impact" or "potentially significant unless mitigated" impact on the environment, but at least one effect 1) has been adequately analyzed in an earlier document pursuant to applicable legal standards, and 2) has been addressed by mitigation measures based on the earlier analysis as described on attached sheets. An ENVIRONMENTAL IMPACT REPORT is required, but it must analyze only the effects that remain to be addressed.
	I find that although the proposed project could have a significant effect on the environment, because all potentially significant effects (a) have been analyzed adequately in an earlier EIR or NEGATIVE DECLARATION pursuant to applicable standards, and (b) have been avoided or mitigated pursuant to that earlier EIR or NEGATIVE DECLARATION, including revisions or mitigation measures that are imposed upon the proposed project, nothing further is required.

Signature Date

EVALUATION INSTRUCTIONS:

1) A brief explanation is required for all answers except "No Impact" answers that are adequately supported by the information sources a lead agency cites in the parentheses following each question. A "No Impact" answer is adequately supported if the referenced information sources show that the impact simply does not apply to projects like the one involved (e.g., the project falls outside a fault rupture zone). A "No Impact" answer should be explained where it is based on project-specific factors as well as general standards (e.g., the project will not expose sensitive receptors to pollutants, based on a project-specific screening analysis).
2) All answers must take account of the whole action involved, including off-site as well as on-site, cumulative as well as project-level, indirect as well as direct, and construction as well as operational impacts.
3) Once the lead agency has determined that a particular physical impact may occur, then the checklist answers must indicate whether the impact is potentially significant, less than significant with mitigation, or less than significant. "Potentially Significant Impact" is appropriate if there is substantial evidence that an effect may be significant. If there are one or more "Potentially Significant Impact" entries when the determination is made, an EIR is required.
4) "Negative Declaration: Less Than Significant With Mitigation Incorporated" applies where the incorporation of mitigation measures has reduced an effect from "Potentially Significant Impact" to a "Less Than Significant Impact." The lead agency must describe the mitigation measures, and briefly explain how they reduce the effect to a less than significant level (mitigation measures from Section XVII, "Earlier Analyses," may be cross-referenced).
5) Earlier analyses may be used where, pursuant to the tiering, program EIR, or other CEQA process, an effect has been adequately analyzed in an earlier EIR or negative declaration. Section 15063(c)(3)(D). In this case, a brief discussion should identify the following:
    a) Earlier Analysis Used. Identify and state where they are available for review.
    b) Impacts Adequately Addressed. Identify which effects from the above checklist were within the scope of and adequately analyzed in an earlier document pursuant to applicable legal standards, and state whether such effects were addressed by mitigation measures based on the earlier analysis.
    c) Mitigation Measures. For effects that are "Less than Significant with Mitigation Measures Incorporated," describe the mitigation measures which were incorporated or refined from the earlier document and the extent to which they address site-specific conditions for the project.
6) Lead agencies are encouraged to incorporate into the checklist references to information sources for potential impacts (e.g., general plans, zoning ordinances). Reference to a

previously prepared or outside document should, where appropriate, include a reference to the page or pages where the statement is substantiated.

7) Supporting Information Sources: A source list should be attached, and other sources used or individuals contacted should be cited in the discussion.

8) This is only a suggested form, and lead agencies are free to use different formats; however, lead agencies should normally address the questions from this checklist that are relevant to a project's environmental effects in whatever format is selected.

9) The explanation of each issue should identify:
   a) The significance criteria or threshold, if any, used to evaluate each question; and
   b) The mitigation measure identified, if any, to reduce the impact to less than significance

EVALUATION OF ENVIRONMENTAL IMPACTS:

In each area of potential impact listed in this section, there are one or more questions which assess the degree of potential environmental effect. A response is provided to each question using one of the four impact evaluation criteria described below. A discussion of the response is also included.

- Potentially Significant Impact. This response is appropriate when there is substantial evidence that an effect is significant. If there are one or more "Potentially Significant Impact" entries, upon completion of the Initial Study, an EIR is required.
- Less than Significant With Mitigation Incorporated. This response applies when the incorporation of mitigation measures has reduced an effect from "Potentially Significant Impact" to a "Less Than Significant Impact". The Lead Agency must describe the mitigation measures and briefly explain how they reduce the effect to a less than significant level.
- Less than Significant Impact. A less than significant impact is one which is deemed to have little or no adverse effect on the environment. Mitigation measures are, therefore, not necessary, although they may be recommended to further reduce a minor impact.
- No Impact. These issues were either identified as having no impact on the environment, or they are not relevant to the Project.

ENVIRONMENTAL CHECKLIST

This section of the Initial Study incorporates the most current Appendix "G" Environmental Checklist Form, contained in the CEQA Guidelines. Impact questions and responses are included in both tabular and narrative formats for each of the 17 environmental topic areas.

I. AESTHETICS -- WOULD THE PROJECT:

	Potentially Significant Impact	***Less Than Significant with Mitigation Incorporation***	***Less Than Significant Impact***	***No Impact***
a) Have a substantial adverse effect on a scenic vista?	*X*			
b) Substantially damage scenic resources, including, but not limited to, trees, rock outcroppings, and historic buildings within a state scenic highway?			*X*	
c) Substantially degrade the existing visual character or quality of the site and its surroundings?	*X*			
d) Create a new source of substantial light or glare which would adversely affect day or nighttime views in the area?	*X*			

RESPONSES TO CHECKLIST QUESTIONS

Response a): The project site is currently undeveloped and consists of agricultural lands. The areas surrounding the project site to the north, west and east also consist of undeveloped agricultural lands. Land to the south of the project site is developed with low density rural residences. The topography of the project site is essentially flat. The project site is not designated as a scenic vista by the City of Tracy General Plan (2006) or the San Joaquin County General Plan. Development of the proposed project would convert the site from its existing use as agricultural land to a developed park site with numerous athletic fields, parking lots, various single-story structures (restrooms, concession buildings, etc), bleachers, and stadium lighting. The project site does not contain any unique or distinguishing features that would qualify the site for designation as a scenic vista. However, implementation of the proposed project would change the existing visual character of the site. This is considered a **potentially significant impact**, and will be addressed further in the EIR.

Response b): As described in the Tracy General Plan EIR**,** there are two Officially Dedicated California Scenic Highway segments in the Tracy Planning Area, which extend a total length of 16 miles. The first designated scenic highway is the portion of I-580 between I-205 and I-5, which offers views of the Coast Range to the west and the Central Valley's urban and

agricultural lands to the east. Part of this scenic highway passes through the existing City limits. The second scenic highway is the portion of I-5 that starts at I-205 and continues south to Stanislaus County, which allows for views of the surrounding agricultural lands and the Delta-Mendota Canal and California Aqueduct.

In addition to State-designated scenic highways, the Scenic Highway Element of the 1978 San Joaquin County General Plan designated the seven-mile portion of Corral Hollow Road that runs southwest from I-580 to the County line as a scenic road.

The project site is not visible from any of the above-referenced scenic highways. Development of the proposed project would not result in the removal of any trees, rock outcroppings, or buildings of historical significance, and would not result in changes to any of the viewsheds from the designated scenic highways in the vicinity of the City of Tracy. This is considered a **less than significant impact**, and will not be addressed further in the EIR.

Response c): As described under Response a), above, development of the proposed project would convert the site from its existing uses as agricultural land, and introduce ballfields, parking lots, and other ancillary uses associated with the sports park. This is considered a **potentially significant impact**, and will be addressed further in the EIR.

Response d): There are no significant existing sources of nighttime lighting or daytime glare on the project site or in the immediate vicinity of the project site. Implementation of the proposed project will introduce new sources of nighttime lighting to the project area in the form of stadium lighting and security lighting in the parking lots and near the restrooms. Additionally, vehicles located in the proposed on-site parking lots may introduce sources of daytime glare in the form of reflections from the vehicle windshields. This is considered a **potentially significant impact**, and will be addressed in greater detail in the EIR.

II. AGRICULTURE RESOURCES: WOULD THE PROJECT:

	Potentially Significant Impact	*Less Than Significant with Mitigation Incorporation*	*Less Than Significant Impact*	*No Impact*
a) Convert Prime Farmland, Unique Farmland, or Farmland of Statewide Importance (Farmland), as shown on the maps prepared pursuant to the Farmland Mapping and Monitoring Program of the California Resources Agency, to non-agricultural use?	X			
b) Conflict with existing zoning for agricultural use, or a Williamson Act contract?	X			
c) Involve other changes in the existing environment which, due to their location or nature, could result in conversion of Farmland, to non-agricultural use?	X			

RESPONSES TO CHECKLIST QUESTIONS

Responses a), b), c): The proposed project would convert the project site from its existing agricultural uses to non-agricultural uses. This is considered a **potentially significant impact**.

The environmental impact report will address the project's potential to convert Prime Farmland, Unique Farmland, Farmland of Statewide Importance, or other agricultural land to a non-agricultural use. Additionally, the environmental impact report will address conflicts with Williamson Act contracts, and will provide an impact analysis for each of the three agricultural issues listed in the checklist above and recommendations for mitigating potentially significant impacts.

III. AIR QUALITY -- WOULD THE PROJECT:

	Potentially Significant Impact	*Less Than Significant with Mitigation Incorporation*	*Less Than Significant Impact*	*No Impact*
a) Conflict with or obstruct implementation of the applicable air quality plan?	X			
b) Violate any air quality standard or contribute substantially to an existing or projected air quality violation?	X			
c) Result in a cumulatively considerable net increase of any criteria pollutant for which the project region is non-attainment under an applicable federal or state ambient air quality standard (including releasing emissions which exceed quantitative thresholds for ozone precursors)?	X			
d) Expose sensitive receptors to substantial pollutant concentrations?	X			
e) Create objectionable odors affecting a substantial number of people?	X			

RESPONSES TO CHECKLIST QUESTIONS

Responses a), b), c), d), e): The proposed project will require site grading and construction activities that may result in temporary, short-term emissions that could impact air quality conditions in the San Joaquin Valley Air Basin. Additionally, the project would result in increased vehicle trips to and from the project site, which could contribute to long-term operational air quality impacts to the San Joaquin Valley Air Basin. This is considered a **potentially significant impact**.

The EIR will include a detailed analysis of the potential short-term, long-term, and cumulative air quality impacts associated with project construction and operation, and will address questions a-e above in detail. The analysis will present a detailed quantitative analysis of potential impacts, a summary of the project's consistency with applicable requirements from the San Joaquin Valley Air Pollution Control District (SJVAPCD), and mitigation measures to reduce impacts where feasible. The EIR will also include a discussion of potential greenhouse gas (GHG) and global warming impacts associated with project implementation, as required by AB 32.

IV. BIOLOGICAL RESOURCES -- WOULD THE PROJECT:

	Potentially Significant Impact	*Less Than Significant with Mitigation Incorporation*	*Less Than Significant Impact*	*No Impact*
a) Have a substantial adverse effect, either directly or through habitat modifications, on any species identified as a candidate, sensitive, or special status species in local or regional plans, policies, or regulations, or by the California Department of Fish and Game or U.S. Fish and Wildlife Service?	X			
b) Have a substantial adverse effect on any riparian habitat or other sensitive natural community identified in local or regional plans, policies, regulations or by the California Department of Fish and Game or US Fish and Wildlife Service?	X			
c) Have a substantial adverse effect on federally protected wetlands as defined by Section 404 of the Clean Water Act (including, but not limited to, marsh, vernal pool, coastal, etc.) through direct removal, filling, hydrological interruption, or other means?	X			
d) Interfere substantially with the movement of any native resident or migratory fish or wildlife species or with established native resident or migratory wildlife corridors, or impede the use of native wildlife nursery sites?	X			
e) Conflict with any local policies or ordinances protecting biological resources, such as a tree preservation policy or ordinance?	X			
f) Conflict with the provisions of an adopted Habitat Conservation Plan, Natural Community Conservation Plan, or other approved local, regional, or state habitat conservation plan?	X			

RESPONSES TO CHECKLIST QUESTIONS

Responses a), b), c), d), e), f): Based on the documented special-status species, sensitive natural communities, wetlands, waters of the US, and other biological resources in the region, it has been determined that the potential impacts on biological resources caused by the proposed project will require a detailed analysis in the environmental impact report. Additionally, the project must be reviewed for consistency with the San Joaquin County Multi-Species Habitat Conservation and Open Space Plan (SJMSCP). As such, the lead agency will examine each of the six environmental issues listed in the checklist above in the environmental impact report and will decide whether the proposed project has the potential to have a significant impact on biological resources. At this point a definitive impact conclusion for each of these

environmental topics will not be made, rather all are considered **potentially significant** until a detailed analysis is prepared in the environmental impact report.

The environmental impact report will provide a biological resources analysis including the methodology, thresholds of significance, and a summary of local biological resources, including descriptions and mapping of plant communities, the associated plant and wildlife species, and sensitive biological resources known to occur, or with the potential to occur in the project vicinity. The biological resources analysis will conclude with a consistency analysis, cumulative impact analysis, and a discussion of feasible mitigation measures that should be implemented in order to reduce impacts on biological resources and to ensure compliance with the federal and state regulations.

V. CULTURAL RESOURCES -- WOULD THE PROJECT:

	Potentially Significant Impact	*Less Than Significant with Mitigation Incorporation*	*Less Than Significant Impact*	*No Impact*
a) Cause a substantial adverse change in the significance of a historical resource as defined in '15064.5?	X			
b) Cause a substantial adverse change in the significance of an archaeological resource pursuant to '15064.5?	X			
c) Directly or indirectly destroy a unique paleontological resource or site or unique geologic feature?	X			
d) Disturb any human remains, including those interred outside of formal cemeteries?	X			

RESPONSES TO CHECKLIST QUESTIONS

Responses a), b), c), d): Based on known historical resources in the region, and the potential for undocumented underground cultural resources in the region, it has been determined that the potential impacts on cultural resources caused by the proposed project will require a detailed analysis in the environmental impact report. As such, the lead agency will examine each of the four environmental issues listed in the checklist above in the environmental impact report and will decide whether the proposed project has the potential to have a significant impact on cultural resources. At this point a definitive impact conclusion for each of these environmental topics will not be made, rather all are considered **potentially significant** until a detailed analysis is prepared in the environmental impact report.

The environmental impact report will include an overview of the prehistory and history of the area, the potential for surface and subsurface cultural resources to be found in the area, the types of cultural resources that may be expected to be found, a review of existing regulations and policies that protect cultural resources, an impact analysis, and mitigation that should be implemented.

VI. GEOLOGY AND SOILS -- WOULD THE PROJECT:

	Potentially Significant Impact	*Less Than Significant with Mitigation*	*Less Than Significant Impact*	*No Impact*
a) Expose people or structures to potential substantial adverse effects, including the risk of loss, injury, or death involving:	X			
i) Rupture of a known earthquake fault, as delineated on the most recent Alquist-Priolo Earthquake Fault Zoning Map issued by the State Geologist for the area or based on other substantial evidence of a known fault? Refer to Division of Mines and Geology Special Publication 42.	X			
ii) Strong seismic ground shaking?	X			
iii) Seismic-related ground failure, including liquefaction?	X			
iv) Landslides?				X
b) Result in substantial soil erosion or the loss of topsoil?	X			
c) Be located on a geologic unit or soil that is unstable, or that would become unstable as a result of the project, and potentially result in on- or off-site landslide, lateral spreading, subsidence, liquefaction or collapse?	X			
d) Be located on expansive soil, as defined in Table 18-1-B of the Uniform Building Code (1994), creating substantial risks to life or property?	X			
e) Have soils incapable of adequately supporting the use of septic tanks or alternative waste water disposal systems where sewers are not available for the disposal of waste water?				X

RESPONSES TO CHECKLIST QUESTIONS

Responses a.i), a.ii): The major active faults that are closest to, but outside of the City of Tracy, have historically been the source of earthquakes felt in Tracy, including the San Andreas, Calaveras, Hayward, and Greenville faults. According to the General Plan EIR data from the State Department of Conservation and the U.S. Geological Survey, there are six faults in the Tracy Planning Area. The Tracy- Stockton fault passes beneath the City of Tracy in the deep subsurface and is considered inactive. The five other faults are located in the southwestern portion of the Tracy Planning Area: the Black Butte fault, the Midway fault, the San Joaquin fault, the Carnegie/Corral Hollow fault, and the Elk Ravine fault, which is considered inactive.

The risk of seismic shaking from these faults is considered **potentially significant** and will require further analysis in the EIR.

Responses a.iii), c): Seismic-related ground failure is caused by the displacement of the ground surface due to loss of strength or failure of underlying earth materials during earthquake shaking. Ground failure may take the form of liquefaction, differential compaction, lateral spreading, lurching, or landslides. This is considered a **potentially significant impact**. The EIR will include a detailed geotechnical evaluation of the project area, which will provide further analysis and recommendations to reduce or avoid seismic-related ground failure and liquefaction impacts.

Response a.iv): The project site is essentially flat, and therefore, is not at risk of landslides. The proposed park improvements would not significantly alter the existing topography of the project site, and development of the proposed park improvements would not result in an increased risk of landslides. There is **no impact**, and this issue will not be addressed further in the EIR.

Response b): Grading activities associated with the proposed park site improvements would increase the potential for erosion during construction. The Regional Water Quality Control Board will require a project specific Storm Water Pollution Prevention Plan (SWPPP) to be prepared prior to site grading. The SWPPPs will include project specific best management measures that are designed to control drainage and erosion. This is considered a **potentially significant impact**, and will be addressed in greater detail in the EIR.

Response d): Expansive soils are those that shrink or swell with the change in moisture content. The volume of change is influenced by the quantity of moisture, by the kind and amount of clay in the soil, and by the original porosity of the soil. Shrinking and swelling can damage roads and other structures unless special engineering design is incorporated into the project plans. This is considered a **potentially significant impact**, and will be addressed in greater detail in the EIR. The geotechnical study prepared for the EIR will identify the specific soil conditions that may contribute to soil expansion and will recommend engineering measures that are necessary to reduce the risks associated with soil expansion.

Response e): The proposed project would connect to the City of Tracy's municipal wastewater system. Septic tanks are not proposed as part of this project. There is **no impact**, and this issue will not be further addressed in the EIR.

VII. HAZARDS AND HAZARDOUS MATERIALS -- WOULD THE PROJECT:

	Potentially Significant Impact	*Less Than Significant with Mitigation Incorporation*	*Less Than Significant Impact*	*No Impact*
a) Create a significant hazard to the public or the environment through the routine transport, use, or disposal of hazardous materials?	X			
b) Create a significant hazard to the public or the environment through reasonably foreseeable upset and accident conditions involving the release of hazardous materials into the environment?	X			
c) Emit hazardous emissions or handle hazardous or acutely hazardous materials, substances, or waste within one-quarter mile of an existing or proposed school?			X	
d) Be located on a site which is included on a list of hazardous materials sites compiled pursuant to Government Code Section 65962.5 and, as a result, would it create a significant hazard to the public or the environment?	X			
e) For a project located within an airport land use plan or, where such a plan has not been adopted, within two miles of a public airport or public use airport, would the project result in a safety hazard for people residing or working in the project area?				X
f) For a project within the vicinity of a private airstrip, would the project result in a safety hazard for people residing or working in the project area?				X
g) Impair implementation of or physically interfere with an adopted emergency response plan or emergency evacuation plan?				X
h) Expose people or structures to a significant risk of loss, injury or death involving wildland fires, including where wildlands are adjacent to urbanized areas or where residences are intermixed with wildlands?				X

RESPONSES TO CHECKLIST QUESTIONS

Responses a), b): A "hazardous material" is a substance or combination of substances that, because of its quantity, concentration, or physical, chemical, or infectious characteristics, may pose a potential hazard to human health or the environment when handled improperly. The proposed park site will require the routine use and application of fertilizers and pesticides commonly used for weed control and landscape maintenance. The storage of these materials at the park site may pose a low to moderate risk of release. Due to the high concentration of

children anticipated to use the proposed park, this is considered a **potentially significant impact,** and will be addressed further in the EIR.

Response c): The project site is not located within ¼ mile of an existing or proposed school, and would therefore, not result in the exposure of any school site to any hazardous materials which may be used or stored at the park. As described under Response a), above, the EIR will include an analysis of the potential risks to park users from any use or storage of hazardous materials on the project site. However, since there are no schools in the immediate vicinity of the project site, this impact is considered **less than significant** and will not be addressed in the EIR.

Response d): The project site and surrounding areas have historically been used for agricultural purposes. There is the potential for underground hazards, such as leaking fuel tanks, etc. to be present on the project site. The project site may also be located in the vicinity of a site which is included on a list of hazardous materials sites compiled pursuant to Government Code Section 65962.5. This is considered a **potentially significant impact**, and will be addressed further in the EIR.

Responses e), f): The Tracy Municipal Airport is located near the southern boundary of the City limits, over five miles from the project site. The airport overflight and approach zones do not cross the project site, nor are there any airport-related land use or height restrictions that apply to the project site. There are no private airstrips within two miles of the project site. There is **no impact** associated with airport-related hazards.

Response g): The development of the proposed project will introduce new vehicle trips to roadways in the vicinity of the park site. Additional vehicle traffic in this area could interfere with emergency access to certain areas. This is considered a **potentially significant impact**, and will be further addressed in the EIR. The EIR will include a detailed traffic impact analysis that will address potential impacts associated with emergency response plans.

Response h): The risk of wildland fires is related to a combination of factors, including winds, temperatures, humidity levels and fuel moisture content. Of these four factors, wind is the most crucial. Steep slopes also contribute to fire hazard by intensifying the effects of wind, and making fire suppression difficult. Features in some parts of the Tracy Planning Area, including highly flammable vegetation and warm and dry summers with temperatures often exceeding 100 degrees Fahrenheit, create a situation that results in potential wildland fires. Where there is easy human access to dry vegetation, dire hazards increase because of the greater chance of human carelessness. High hazard areas include outlying residential parcels and open lands adjacent to residential areas.

To quantify this potential risk, the California Department of Forestry (CDF) has developed a Fire Hazard Severity Scale that utilizes three criteria in order to evaluate and designate potential fire hazards in wildland areas. The criteria are fuel loading (vegetation), fire weather (winds, temperatures, humidity levels and fuel moisture contents) and topography (degree of slope). Figure 4.13- 1 of the General Plan EIR presents the Fire Hazard Severity Scale for the Tracy

area. As is shown in the figure, a portion of the lands on the southwest side of the City are designated as having a Moderate wildland fire hazard, but no part of the Tracy Planning Area has a High wildland fire hazard designation. The proposed project site is not located within the area identified as having a Moderate wildland fire hazard. Additionally, the project site is flat, and is void of flammable vegetation. The improvements to the site would consist primarily of grass ballfields, which are not a high risk for wildland fires. This is considered a **less than significant impact** and will not be further addressed in the EIR.

VIII. HYDROLOGY AND WATER QUALITY -- WOULD THE PROJECT:

	Potentially Significant Impact	***Less Than Significant with Mitigation Incorporation***	***Less Than Significant Impact***	***No Impact***
a) Violate any water quality standards or waste discharge requirements?	X			
b) Substantially deplete groundwater supplies or interfere substantially with groundwater recharge such that there would be a net deficit in aquifer volume or a lowering of the local groundwater table level (e.g., the production rate of pre-existing nearby wells would drop to a level which would not support existing land uses or planned uses for which permits have been granted)?	X			
c) Substantially alter the existing drainage pattern of the site or area, including through the alteration of the course of a stream or river, in a manner which would result in substantial erosion or siltation on- or off-site?	X			
d) Substantially alter the existing drainage pattern of the site or area, including through the alteration of the course of a stream or river, or substantially increase the rate or amount of surface runoff in a manner which would result in flooding on- or off-site?	X			
e) Create or contribute runoff water which would exceed the capacity of existing or planned stormwater drainage systems or provide substantial additional sources of polluted runoff?	X			
f) Otherwise substantially degrade water quality?	X			
g) Place housing within a 100-year flood hazard area as mapped on a federal Flood Hazard Boundary or Flood Insurance Rate Map or other flood hazard delineation map?	X			
h) Place within a 100-year flood hazard area structures which would impede or redirect flood flows?	X			
i) Expose people or structures to a significant risk of loss, injury or death involving flooding, including flooding as a result of the failure of a levee or dam?	X			
j) Inundation by seiche, tsunami, or mudflow?			X	

RESPONSES TO CHECKLIST QUESTIONS

Responses a), b), c), d), e), f), g), h), i): Flood hazards can result from intense rain, snowmelt, cloudbursts, or a combination of the three, or from failure of a water impoundment structure, such as a dam. Floods from rainstorms generally occur between November and April and are characterized by high peak flows of moderate duration. Human activities have an effect on water quality when chemicals, heavy metals, hydrocarbons (auto emissions and car crank case oil), and other materials are transported with stormwater into drainage systems. Construction activities can increase sediment runoff, including concrete waste and other pollutants.

As required by the Clean Water Act, the project will require an approved Storm Water Pollution Prevention Plan (SWPPP) that includes best management practices for grading, and preservation of topsoil. A SWPPP is not required if the project will disturb less than one acre. SWPPPs are designed to control storm water quality degradation to the extent practicable using best management practices during and after construction. The City of Tracy will submit the SWPPP with a Notice of Intent to the Regional Water Quality Control Board (RWQCB) to obtain a General Permit.

Implementation of the proposed project could result in **potentially significant impacts** to flooding and water quality. Additionally, the project includes the construction and use of an onsite well to provide irrigation and landscaping water to the park. The use of onsite groundwater could potentially impact groundwater levels in the project area. These issues will be fully addressed in the EIR.

Response j): There are no significant bodies of water near the project site that could result in the occurrence of a seiche or tsunami. Additionally, the project site and the surrounding areas are essentially flat, which precludes the possibility of mudflows occurring on the project site. This issue is considered **less than significant** and will not be further addressed in the EIR.

IX. LAND USE AND PLANNING - Would the project:

	Potentially Significant Impact	*Less Than Significant with Mitigation Incorporation*	*Less Than Significant Impact*	*No Impact*
a) Physically divide an established community?			X	
b) Conflict with any applicable land use plan, policy, or regulation of an agency with jurisdiction over the project (including, but not limited to the general plan, specific plan, local coastal program, or zoning ordinance) adopted for the purpose of avoiding or mitigating an environmental effect?	X			
c) Conflict with any applicable habitat conservation plan or natural community conservation plan?	X			

RESPONSES TO CHECKLIST QUESTIONS

Response a): The project site is surrounded by agricultural lands to the north, west and east, and rural residential lands to the south. Implementation of the proposed project would not divide an established community. This is a **less than significant impact**, and will not be further addressed in the EIR.

Response b): The proposed project includes a General Plan Amendment to change the site's land use designation from Agriculture to Public Facilities. The project also requires annexation of the site into the City of Tracy, which requires approval from the Local Agency Formation Commission (LAFCO). The change in land use designation and the conversion of the site from agricultural to park uses is considered a **potentially significant impact**, and will be further addressed in the EIR.

Response c): The project site is within the boundaries of the San Joaquin County Multi-Species Habitat Conservation and Open Space Plan. The San Joaquin County Multi-Species Habitat Conservation and Open Space Plan (SJMSCP) was conceived in 1993 and formally adopted by the County in 2001. Cities throughout San Joaquin County have since become signatories, including Tracy on November 6, 2001, as described in the Tracy General Plan EIR. The potential for the project to conflict with the SJMSCP is considered a **potentially significant impact**, and will be further addressed in the EIR.

X. MINERAL RESOURCES -- WOULD THE PROJECT:

	Potentially Significant Impact	*Less Than Significant with Mitigation Incorporation*	*Less Than Significant Impact*	*No Impact*
a) Result in the loss of availability of a known mineral resource that would be of value to the region and the residents of the state?			X	
b) Result in the loss of availability of a locally-important mineral resource recovery site delineated on a local general plan, specific plan or other land use plan?			X	

RESPONSES TO CHECKLIST QUESTIONS

Responses a), b): As described in the Tracy General Plan EIR, the main mineral resources found in San Joaquin Count, and the Tracy Planning Area, are sand and gravel (aggregate), which are primarily used for construction materials like asphalt and concrete. According to the California Geological Survey (CGS) evaluation of the quality and quantity of these resources, the most marketable aggregate materials in San Joaquin County are found in three main areas:

- In the Corral Hollow alluvial fan deposits south of Tracy
- Along the channel and floodplain deposits of the Mokelumne River
- Along the San Joaquin River near Lathrop

Figure 4.8-1 of the General Plan EIR identifies Mineral Resource Zones (MRZs) throughout the Tracy Planning Area. The project site is located within an area designated as MRZ-1. The MRZ-1 designation applies to areas where adequate information indicates that no significant mineral deposits are present or where it is judged that little likelihood exists for their presence. Therefore, the project would not result in the loss of availability of a known mineral resource. Additionally, the project would result in the installation of primarily ballfields and parking areas, with very limited areas of building coverage. In the event that mineral resources were determined in the future to be present on the project site, implementation of the project would not preclude the ability to extract these resources in the future. Therefore, this impact is considered **less than significant** and will not be addressed further in the EIR.

XI. NOISE -- WOULD THE PROJECT RESULT IN:

	Potentially Significant Impact	*Less Than Significant with Mitigation Incorporation*	*Less Than Significant Impact*	*No Impact*
a) Exposure of persons to or generation of noise levels in excess of standards established in the local general plan or noise ordinance, or applicable standards of other agencies?	X			
b) Exposure of persons to or generation of excessive groundborne vibration or groundborne noise levels?	X			
c) A substantial permanent increase in ambient noise levels in the project vicinity above levels existing without the project?	X			
d) A substantial temporary or periodic increase in ambient noise levels in the project vicinity above levels existing without the project?	X			
e) For a project located within an airport land use plan or, where such a plan has not been adopted, within two miles of a public airport or public use airport, would the project expose people residing or working in the project area to excessive noise levels?			X	
f) For a project within the vicinity of a private airstrip, would the project expose people residing or working in the project area to excessive noise levels?			X	

RESPONSES TO CHECKLIST QUESTIONS

Responses a), b), c), d): Implementation of the proposed project would result in temporary noise increases during site grading and construction activities, in addition to operational increases in noise associated with increased vehicle traffic and activities at the park site. This is considered a **potentially significant impact**.

The environmental impact report will include a study that will evaluate existing noise levels, future noise levels, adjacent noise sources, and the noise related impacts. A noise engineer will review background noise level measurements and short-term noise level measurements that were recently generated during environmental review within the region. The intent of using the noise level measurements will be to quantify existing background noise levels for comparison to the predicted future cumulative noise levels created project implementation.

Responses e), f): As described above under Section VII., responses e), and f), the project site is not located in the vicinity of a public airport or a private airstrip. Therefore, future park users would not be subject to noise impacts from plane overflights or airport operations. This is considered a **less than significant impact**, and will not be further addressed in the EIR.

XII. POPULATION AND HOUSING -- Would the project:

	Potentially Significant Impact	*Less Than Significant with Mitigation Incorporation*	*Less Than Significant Impact*	*No Impact*
a) Induce substantial population growth in an area, either directly (for example, by proposing new homes and businesses) or indirectly (for example, through extension of roads or other infrastructure)?			X	
b) Displace substantial numbers of existing housing, necessitating the construction of replacement housing elsewhere?			X	
c) Displace substantial numbers of people, necessitating the construction of replacement housing elsewhere?			X	

RESPONSES TO CHECKLIST QUESTIONS

Responses a), b), c): The proposed project would provide park and recreation facilities to meet the existing and projected needs of the City of Tracy. Implementation of the project would not directly result in population growth, nor would it convert any land use designations to a use that would allow for the construction of housing. The proposed project will not generate a significant number of new jobs which could lead indirectly to population growth.

The project would extend water, wastewater and electrical infrastructure to the site from Tracy Boulevard. Additionally, the project would include roadway improvements at the intersection of the park site and Tracy Boulevard. However, these infrastructure improvements would not lead to indirect population growth, as the lands surrounding the site would remain under their current agricultural designations, and the extension of infrastructure to the site would not facilitate the construction of housing in an area that is not currently served by infrastructure.

There are no homes or residents currently located on the project site, and therefore, no homes or people would be displaced as a result of project implementation. These impacts are considered **less than significant** and will not be addressed further in the EIR.

XIII. PUBLIC SERVICES

	Potentially Significant Impact	*Less Than Significant with Mitigation Incorporation*	*Less Than Significant Impact*	*No Impact*
a) Would the project result in substantial adverse physical impacts associated with the provision of new or physically altered governmental facilities, need for new or physically altered governmental facilities, the construction of which could cause significant environmental impacts, in order to maintain acceptable service ratios, response times or other performance objectives for any of the public services:				
Fire protection?	X			
Police protection?	X			
Schools?			X	
Parks?			X	
Other public facilities?			X	

RESPONSES TO CHECKLIST QUESTIONS

Response a), Fire and Police Protection: Implementation of the proposed project would result in increased demand for police and fire protection at the project site. This is considered a **potentially significant impact** and will be further addressed in the EIR.

Response a), Schools, Parks, and Other Public Facilities: As described above in Section XII, the proposed project would not result in population growth in the City of Tracy. Since the project would not result in population growth, implementation of the project would not result in increased enrollment in area schools, which could lead to impacts. Additionally, the project would increase the availability of park and recreation resources within the City of Tracy, which would reduce the strain that existing park users and residents are currently placing on existing facilities. This is considered a **less than significant impact** and will not be further addressed in the EIR.

XIV. RECREATION

	Potentially Significant Impact	*Less Than Significant with Mitigation Incorporation*	*Less Than Significant Impact*	*No Impact*
a) Would the project increase the use of existing neighborhood and regional parks or other recreational facilities such that substantial physical deterioration of the facility would occur or be accelerated?			X	
b) Does the project include recreational facilities or require the construction or expansion of recreational facilities which might have an adverse physical effect on the environment?	X			

RESPONSES TO CHECKLIST QUESTIONS

Response a): Implementation of the proposed project would increase the park and recreation facilities available to residents in Tracy and the surrounding areas, which is anticipated to result in decreased impacts to existing park facilities. This is considered a **less than significant impact,** and will not be further addressed in the EIR.

Response b): The proposed project consists entirely of newly proposed recreational facilities and supporting infrastructure. As described throughout this Initial Study, project implementation may result in adverse physical effects on the environment. These potential effects are considered **potentially significant**, and will be addressed in the appropriate sections of the EIR.

XV. TRANSPORTATION/TRAFFIC -- WOULD THE PROJECT:

	Potentially Significant Impact	*Less Than Significant with Mitigation Incorporation*	*Less Than Significant Impact*	*No Impact*
a) Cause an increase in traffic which is substantial in relation to the existing traffic load and capacity of the street system (i.e., result in a substantial increase in either the number of vehicle trips, the volume to capacity ratio on roads, or congestion at intersections)?	X			
b) Exceed, either individually or cumulatively, a level of service standard established by the county congestion management agency for designated roads or highways?	X			
c) Result in a change in air traffic patterns, including either an increase in traffic levels or a change in location that results in substantial safety risks?	X			
d) Substantially increase hazards due to a design feature (e.g., sharp curves or dangerous intersections) or incompatible uses (e.g., farm equipment)?	X			
e) Result in inadequate emergency access?	X			
f) Result in inadequate parking capacity?	X			
g) Conflict with adopted policies, plans, or programs supporting alternative transportation (e.g., bus turnouts, bicycle racks)?	X			

RESPONSES TO CHECKLIST QUESTIONS

Responses a), b), c), d), e), f), g): Based on existing and projected traffic volume levels along roadways, it has been determined that the potential traffic impacts caused by the proposed project will require a detailed analysis in the environmental impact report. As such, the City of Tracy will examine each of the seven environmental issues listed in the checklist above in the environmental impact report and will determine whether the proposed project has the potential to have a significant impact from traffic. At this point a definitive impact conclusion for each of these environmental topics will not be made, rather all are considered **potentially significant** until a detailed analysis is conducted in the environmental impact report.

The analysis in the EIR will describe existing and future traffic conditions and will identify the trips that will be generated by the project and the projected distribution of those trips on the roadway system. The EIR will analyze traffic impacts associated with the project under existing and cumulative conditions. Potential impacts associated with site access, on-site circulation, and parking will also be addressed in the EIR.

XVI. UTILITIES AND SERVICE SYSTEMS -- WOULD THE PROJECT:

	Potentially Significant Impact	*Less Than Significant with Mitigation Incorporation*	*Less Than Significant Impact*	*No Impact*
a) Exceed wastewater treatment requirements of the applicable Regional Water Quality Control Board?	X			
b) Require or result in the construction of new water or wastewater treatment facilities or expansion of existing facilities, the construction of which could cause significant environmental effects?	X			
c) Require or result in the construction of new storm water drainage facilities or expansion of existing facilities, the construction of which could cause significant environmental effects?	X			
d) Have sufficient water supplies available to serve the project from existing entitlements and resources, or are new or expanded entitlements needed?	X			
e) Result in a determination by the wastewater treatment provider which serves or may serve the project that it has adequate capacity to serve the projects projected demand in addition to the providers existing commitments?	X			
f) Be served by a landfill with sufficient permitted capacity to accommodate the projects solid waste disposal needs?	X			
g) Comply with federal, state, and local statutes and regulations related to solid waste?	X			

RESPONSES TO CHECKLIST QUESTIONS

Responses a), b), c), d), e), f), g): Implementation of the project would result in increased demands for utilities to serve the project. As such, the City of Tracy will examine each of the seven environmental issues listed in the checklist above in the environmental impact report and will decide whether the proposed project has the potential to have a significant impact to utility systems. At this point a definitive impact conclusion for each of these environmental topics will not be made, rather all are considered **potentially significant** until a detailed analysis is prepared in the environmental impact report.

XVII. MANDATORY FINDINGS OF SIGNIFICANCE --

	Potentially Significant Impact	*Less Than Significant with Mitigation Incorporation*	*Less Than Significant Impact*	*No Impact*
a) Does the project have the potential to degrade the quality of the environment, substantially reduce the habitat of a fish or wildlife species, cause a fish or wildlife population to drop below self-sustaining levels, threaten to eliminate a plant or animal community, reduce the number or restrict the range of a rare or endangered plant or animal or eliminate important examples of the major periods of California history or prehistory?	X			
b) Does the project have impacts that are individually limited, but cumulatively considerable? ("Cumulatively considerable" means that the incremental effects of a project are considerable when viewed in connection with the effects of past projects, the effects of other current projects, and the effects of probable future projects)?	X			
c) Does the project have environmental effects which will cause substantial adverse effects on human beings, either directly or indirectly?	X			

RESPONSES TO CHECKLIST QUESTIONS

Responses a), b), c): Based on the documented biological resources, and cultural resources, and based on the existing and projected air quality, noise and traffic conditions, it has been determined that the potential for the proposed project to: degrade the quality of the environment; substantially reduce the habitat of a fish or wildlife species; cause a fish or wildlife population to drop below self-sustaining levels; threaten to eliminate a plant or animal community; reduce the number or restrict the range of a rare or endangered plant or animal; eliminate important examples of the major periods of California history or prehistory; create cumulatively considerable impacts; or adversely affect human beings will require more detailed analysis in an environmental impact report. As such, the City of Tracy will examine each of these environmental issues in the environmental impact report and will decide whether the proposed project has the potential to have a significant impact on these environmental issues. At this point a definitive impact conclusion for each of these environmental topics will not be made, rather all are considered **potentially significant** until a detailed analysis is prepared in the environmental impact report.

TRACY
Think Inside the Triangle™

CITY OF TRACY
Fire Department
835 Central Ave.
Tracy, CA 95376

TRACY FIRE DEPARTMENT
Fire Administration
Telephone: (209) 831-6700
FAX (209) 831-6703

RECEIVED
JAN 12 2009
CITY OF TRACY

January 12, 2008

Development and Engineering Services
Attn: Scott Claar
Planning Division
333 Civic Center Plaza
Tracy, CA 95376

Plan Check #: N/A
Project Name: Holly Sugar Sports Parks
Scope of Work: Notice of Preparation and Initial Study

#	SHEET	COMMENT
1.	N/A	Prior to publication of the Draft EIR De Nova Planning Group (consultant) shall schedule a meeting with fire department staff to discuss in detail project impacts and mitigations.
		Additional comments may be added during subsequent review.
Plans Reviewed By:		Jake T. Tomlin, Fire Marshal Phone: (209) 831-6706 Email: jake.tomlin@ci.tracy.ca.us

STATE OF CALIFORNIA

Arnold Schwarzenegger, *Governor*

PUBLIC UTILITIES COMMISSION
505 VAN NESS AVENUE
SAN FRANCISCO, CA 94102-3298

RECEIVED
JAN 27 2009
CITY OF TRACY

January 26, 2009

Scott Claar
City of Tracy
333 Civic Center Plaza
Tracy, CA 95376

Re: Notice of Preparation (NOP), Draft Environmental Impact Report (EIR)
Holly Sugar Sports Park/SCH# 2008122103

Dear Mr. Claar:

As the state agency responsible for rail safety within California, the California Public Utilities Commission (CPUC or Commission) recommends that development projects proposed near rail corridors be planned with the safety of these corridors in mind. New developments and improvements to existing facilities may increase vehicular traffic volumes, not only on streets and at intersections, but also at at-grade highway-rail crossings. In addition, projects may increase pedestrian traffic at crossings, and elsewhere along rail corridor rights-of-way. Working with CPUC staff early in project planning will help project proponents, agency staff, and other reviewers to identify potential project impacts and appropriate mitigation measures, and thereby improve the safety of motorists, pedestrians, railroad personnel, and railroad passengers.

The Commission recommends that the City include consideration of potential project-related rail safety impacts and measures to reduce adverse impacts of the proposed project to the Tracy Boulevard at-grade crossing (CPUC #001B-81.60) and North Corral Hollow Road crossing (CPUC #001B-80.60). The project's traffic impact study (TIS) is the mechanism by which to address these concerns since it will be the basis for the analysis within the Transportation/Circulation section of the DEIR.

In general, the major types of impacts to consider are collisions between trains and vehicles, and between trains and pedestrians. Changes in land use should not be allowed that would permit housing adjacent to existing rail yards. Similarly, where a need for grade-separated crossings is identified, new development should not be placed adjacent to at-grade highway rail crossings, within the footprint of land needed for future grade-separation structures.

General categories of measures to reduce potential adverse impacts on rail safety include:

- Installation of grade separations at crossings, i.e., physically separating roads and railroad track by constructing overpasses or underpasses
- Improvements to warning devices at existing highway-rail crossings
- Installation of additional warning signage
- Improvements to traffic signaling at intersections adjacent to crossings, e.g., traffic preemption
- Installation of median separation to prevent vehicles from driving around railroad crossing gates

- Where soundwalls, landscaping, buildings, etc. would be installed near crossings, maintaining the visibility of warning devices and approaching trains
- Prohibition of parking within 100 feet of crossings to improve the visibility of warning devices and approaching trains
- Installation of pedestrian-specific warning devices and channelization
- Installation of additional traffic lanes through the crossing to accommodate additional traffic
- Construction of pull-out lanes for buses and vehicles transporting hazardous materials
- Installation of vandal-resistant fencing or walls to limit the access of pedestrians onto the railroad right-of-way
- Elimination of driveways near crossings
- Increased enforcement of traffic laws at crossings
- Rail safety awareness programs to educate the public about the hazards of highway-rail grade crossings

CPUC also encourages localities to set up mechanisms whereby new developments pay a fair share of their impact costs to fund the above measures if not already in an existing Fee program by the City or a Regional Fee program.

Commission approval is required to modify an existing highway-rail crossing or to construct a new crossing.

Please forward the Traffic impact Study (TIS) scope, so we may have an opportunity to review the proposed analysis which will make our review more efficient and expedient during the DEIR.

Thank you for your consideration of these comments and we look forward to working with the City on this project. If you have any questions in this matter, please call me at (415) 713-0092 or email at ms2@cpuc.ca.gov.

Sincerely,

Moses Stites
Rail Corridor Safety Specialist
Consumer Protection and Safety Division
Rail Transit and Crossings Branch
515 L Street, Suite 1119
Sacramento, CA 95814

STATE OF CALIFORNIA
FACSIMILE COVER
10-2A-0049 (NEW 10/92)

ATTENTION: Scott Claar	FROM: Kathy Selsor Department of Transportation 1976 East Charter Way Stockton, CA 95205	
UNIT/COMPANY:	DATE: 1/20/09	TOTAL PAGES (Including Cover Page)
	FAX # (Include Area Code) (209) 948-7194	ATSS FAX 8-423-7194
DISTRICT/CITY City of Tracy 520 Tracy Bouelvard Tracy, Ca 95376	PHONE # (& Area Code) (209) 948-7190	ATSS 8-423-7190
PHONE # (& Area Code) (209) 831- FAX # (& Area Code) (209) 831-4606	ORIGINAL DISPOSITION: Destroy ☐ Return ☐ Call for Pickup ☐	

COMMENTS:

SJ-205-PM 5.8
SCH#2008122103
Holly Sugar Sports Center

RECEIVED
JAN 20 2009
CITY OF TRACY

STATE OF CALIFORNIA—BUSINESS, TRANSPORTATION AND HOUSING AGENCY ARNOLD SCHWARZENEGGER, Governor

DEPARTMENT OF TRANSPORTATION
P.O. BOX 2048 STOCKTON, CA 95201
(1976 E. CHARTER WAY/1976 E. DR. MARTIN
LUTHER KING JR. BLVD. 95205)
TTY: California Relay Service (800) 735-2929
PHONE (209) 941-1921
FAX (209) 948-7194

Flex your power!
Be energy efficient!

January 20, 2009

10-SJ-205-PM 5.8
SCH#2008122103
Holly Sugar Sports Center

Scott Claar
City of Tracy
520 Tracy Boulevard
Tracy, CA 95376

Dear Mr. Claar:

The California Department of Transportation (Department) appreciates the opportunity to have reviewed the Notice of Preparation (NOP) and Initial Study (IS) for the proposed Holly Sugar Sports Park to be located between Corral Hollow Road and Tracy Boulevard in the city of Tracy. This proposed project consists of the construction and operation of approximately 282-acre Park, which would include an approximately 150-acre active sports park facility, approximately 86 acres of land south of the proposed sports park for passive recreational uses and an approximately 46-acre area to the northwest of the active sports site as a future expansion area. The Department has the following comments:

Please prepare and submit for Caltrans review and comment a traffic impact study (TIS). The Department recommends that the study be prepared in accordance with the *Caltrans Guide for the Preparation of Traffic Impact Studies*, dated December 2002 (Guide).

Please use Synchro/Sim traffic version 7.0 to provide detailed traffic operations analyses.

An Encroachment Permit will be required for work (if any) done within the Department's right of way. This work is subject to the California Environmental Quality Act (CEQA). Therefore, environmental studies may be required as part of the encroachment permits application. A qualified professional must conduct any such studies undertaken to satisfy the Department's environmental review responsibilities. Ground disturbing activities to the site prior to completion and/or approval of required environmental documents may affect the Department's ability to issues a permit for the project. Furthermore, if engineering plans or drawings will be part of your permit application, they should be

prepared in standard units.

If you have any questions or would like to discuss our comments in more detail, please contact Kathy Selsor at (209) 948-7190 (e-mail: kathy_selsor@dot.ca.gov) or me at (209) 941-1921.

Sincerely,

Kathy Selsor for

TOM DUMAS, CHIEF
OFFICE OF METROPOLITAN PLANNING

c: SMorgan CA Office of Research and Planning

SAN JOAQUIN COUNTY
COMMUNITY DEVELOPMENT DEPARTMENT

1810 E. HAZELTON AVE., STOCKTON, CA 95205-6232
PHONE: 209/468-3121 FAX: 209/468-3163

RECEIVED
JAN 28 2009
CITY OF TRACY

January 26, 2009

Scott Claar- Associate Planner
City of Tracy-Department of Development and Engineering Services
333 Civic Center Plaza
Tracy, CA 95376

RE: Notice of Preparation- Holly Sugar Sports Park

Dear Mr. Claar:

Thank you for sending the Notice of Preparation for the Holly Sugar Sports Park. The San Joaquin County Community Development Department has reviewed the Initial Study and offers the following comments:

The approximately 282-acre project site is currently in agricultural production. The project site has a zoning designation of General Agriculture- 40 acre minimum lot size (AG-40) and a General Plan designation of General Agriculture (A/G). The County is concerned about the loss of agricultural land from converting the agricultural use to a nonagricultural use and amending the designation from General Agriculture to Public Facilities. This project will be subject to the Agricultural Mitigation Ordinance of the Development Title to provide mitigation for the significant loss of agricultural land. The Ordinance requires agricultural mitigation for a Zone Reclassification that changes the permitted use from agricultural to a non-agricultural use, regardless of the General Plan designation (Section 9-1080.3(a) (1)). Agricultural Mitigation shall be satisfied by granting a farmland conservation easement or other farmland conservation mechanism as set forth in Development Title Section 9-1080.3(d). The number of acres of agricultural mitigation land shall be at least equal to the number of acres that will be changed to a non-agricultural use (a 1:1 ratio). Pursuant to Section 9-1080.3(f), submission of the required legal instrument to provide agricultural mitigation land shall occur at the time of Grading Permit or Building Permit issuance for the underlying development project.

We appreciate the opportunity to comment on this application. Please add our agency to the notification list to receive the Draft Environmental Impact Report. If you have any questions, please free to contact me at 209-468-8477.

Sincerely,

Mo Hatef
Associate Planner

San Joaquin Valley
AIR POLLUTION CONTROL DISTRICT

RECEIVED
FEB 03 2009
CITY OF TRACY

January 28, 2009

Scott Claar
City of Tracy
Development & Engineering
333 Civic Center Plaza
Tracy, CA 95376

Subject: Comments on Proposed Project

Project: Holly Sugar Sports Park

District Reference No: 20090037

Dear Mr. Claar:

The San Joaquin Valley Unified Air Pollution Control District (District) has reviewed the Notice of Preparation (NOP) for the Holly Sugar Sports Park project to be located immediately north of the city limits. The 282-acre park project would include 150 acres for a sports facility, 86 acres for recreational uses, and 46 acres dedicated for park expansion. The District offers the following comments:

District Comments

1) In addition to the detailed quantitative analysis of short-term and long-term, permitted (stationary) and non-stationary (mobile) source, construction and operational emissions and discussion of mitigation measures, the District recommends that any preliminary and final environmental review of the project's potential impact on air quality also include the following:

   1a) A description of the regulatory environment and existing air quality conditions impacting the area. Information on the District's attainment status can be found on the District's web page at http://valleyair.org/aqinfo/attainment.htm.

Seyed Sadredin
Executive Director/Air Pollution Control Officer

Northern Region
4800 Enterprise Way
Modesto, CA 95356-8718
Tel: (209) 557-6400 FAX: (209) 557-6475

Central Region (Main Office)
1990 E. Gettysburg Avenue
Fresno, CA 93726-0244
Tel: (559) 230-6000 FAX: (559) 230-6061
www.valleyair.org

Southern Region
2700 M Street, Suite 275
Bakersfield, CA 93301-2373
Tel: (661) 326-6900 FAX: (661) 326-6985

Printed on recycled paper.

1b) A discussion of the potential health impact of toxic air contaminants (TACs). The discussion should include not only the impacts of the project on near-by receptors, but also the impact from existing or planned land uses (surrounding industrial and commercial zones) on the receptors utilizing the park facilities. If preliminary analysis indicates that TACs are a concern, the District recommends that a health risk assessment (HRA) be performed. If a HRA is to be performed, it is recommended that the project proponent contact the District to review the proposed modeling approach. Please contact Mr. Leland Villalvazo, Supervising Air Quality Specialist, at hramodeler@valleyair.org. Additional information on TACs can be found online on the District's Air Quality Modeling page at http://www.valleyair.org/busind/pto/Tox_Resources/AirQuality Monitoring.htm. If an HRA is performed, all input and out put files necessary to validate the analysis should be submitted to the District in electronic format.

1c) A discussion of whether the project would create nuisance odors.

1d) A discussion of the methodology, model assumptions, inputs and results used in characterizing the project's impact on air quality.

1e) A discussion of greenhouse gases (GHGs). At this time there are no established significance thresholds for GHG; however, it is suggested that the EIR include a discussion of GHG emissions generated by the project and the effect they will have, if any, on global climate change.

2) The proposed project may require District permits. Prior to construction, the project proponent should submit to the District an application for an Authority to Construct (ATC). For further information or assistance, the project proponent may contact the District's Small Business Assistance Office at (209) 557-6446.

3) The proposed project will be subject to District Rule 9510 (Indirect Source Review) because upon full build-out the project would include more than 20,000 square feet of recreational space. District Rule 9510 is intended to mitigate a project's impact on air quality through project design elements or by payment of applicable off-site mitigation fees. Any applicant subject to District Rule 9510 is required to submit an Air Impact Assessment (AIA) application to the District no later than seeking final discretionary approval, and to pay any applicable off-site mitigation fees before issuance of the first building permit. If approval of the subject project constitutes the last discretionary approval by your agency, the District recommends that demonstration of compliance with District Rule 9510, including payment of all applicable fees, be made a condition of the project's approval. More information about District Rule 9510 can be found on the District's website at http://www.valleyair.org/ISR/ISRHome.htm.

District staff is available to meet with you and/or the applicant to further discuss the regulatory requirements that are associated with this project. If you have any questions or require further information, please call Jessica Willis at (559) 230-5818 and provide the reference number at the top of this letter.

Sincerely,

David Warner
Director of Permit Services

Jessica R. Willis

for Arnaud Marjollet
Permit Services Manager

DW: jw

cc: File

6/5/2009 10:28:05 AM

Urbemis 2007 Version 9.2.4

Combined Annual Emissions Reports (Tons/Year)

File Name: C:\Documents and Settings\Kurt Legleiter\Application Data\Urbemis\Version9a\Projects\Tracy Holly Sugar Park Operational.urb924

Project Name: Holly Sugar Sports Park

Project Location: San Joaquin County

On-Road Vehicle Emissions Based on: Version : Emfac2007 V2.3 Nov 1 2006

Off-Road Vehicle Emissions Based on: OFFROAD2007

Summary Report:

AREA SOURCE EMISSION ESTIMATES

	ROG	NOx	CO	SO2	PM10	PM2.5	CO2
TOTALS (tons/year, unmitigated)	6.56						

OPERATIONAL (VEHICLE) EMISSION ESTIMATES

	ROG	NOx	CO	SO2	PM10	PM2.5	CO2
TOTALS (tons/year, unmitigated)	1.66	2.30	16.36	0.01	1.04	0.24	1,176.86

SUM OF AREA SOURCE AND OPERATIONAL EMISSION ESTIMATES

	ROG	NOx	CO	SO2	PM10	PM2.5	CO2
TOTALS (tons/year, unmitigated)	8.22	2.30	16.36	0.01	1.04	0.24	1,176.86

6/5/2009 10:28:05 AM

Area Source Unmitigated Detail Report:

AREA SOURCE EMISSION ESTIMATES Annual Tons Per Year, Unmitigated

Source	ROG	NOx	CO	SO2	PM10	PM2.5	CO2
Natural Gas							
Hearth							
Landscape							
Consumer Products	0.00						
Architectural Coatings	6.56						
TOTALS (tons/year, unmitigated)	6.56						

Area Source Changes to Defaults

Operational Unmitigated Detail Report:

OPERATIONAL EMISSION ESTIMATES Annual Tons Per Year, Unmitigated

Source	ROG	NOX	CO	SO2	PM10	PM25	CO2
Sports Park	1.66	2.30	16.36	0.01	1.04	0.24	1,176.86
TOTALS (tons/year, unmitigated)	1.66	2.30	16.36	0.01	1.04	0.24	1,176.86

Operational Settings:

Does not include correction for passby trips

Does not include double counting adjustment for internal trips

Analysis Year: 2010 Season: Annual

Emfac: Version : Emfac2007 V2.3 Nov 1 2006

6/5/2009 10:28:05 AM

Summary of Land Uses

Land Use Type	Acreage	Trip Rate	Unit Type	No. Units	Total Trips	Total VMT
Sports Park		3.11	acres	282.00	877.02	6,540.38
					877.02	6,540.38

Vehicle Fleet Mix

Vehicle Type	Percent Type	Non-Catalyst	Catalyst	Diesel
Light Auto	45.7	1.5	98.3	0.2
Light Truck < 3750 lbs	11.5	3.5	89.5	7.0
Light Truck 3751-5750 lbs	21.0	1.4	98.1	0.5
Med Truck 5751-8500 lbs	11.3	0.9	99.1	0.0
Lite-Heavy Truck 8501-10,000 lbs	2.1	0.0	71.4	28.6
Lite-Heavy Truck 10,001-14,000 lbs	0.7	0.0	42.9	57.1
Med-Heavy Truck 14,001-33,000 lbs	1.1	9.1	18.2	72.7
Heavy-Heavy Truck 33,001-60,000 lbs	1.6	0.0	0.0	100.0
Other Bus	0.0	0.0	0.0	0.0
Urban Bus	0.1	0.0	0.0	100.0
Motorcycle	3.8	68.4	31.6	0.0
School Bus	0.1	0.0	0.0	100.0
Motor Home	1.0	0.0	90.0	10.0

Travel Conditions

	Residential			Commercial		
	Home-Work	Home-Shop	Home-Other	Commute	Non-Work	Customer
Urban Trip Length (miles)	10.8	7.3	7.5	9.5	7.4	7.4

6/5/2009 10:28:05 AM

Travel Conditions

	Residential			Commercial		
	Home-Work	Home-Shop	Home-Other	Commute	Non-Work	Customer
Rural Trip Length (miles)	16.8	7.1	7.9	14.7	6.6	6.6
Trip speeds (mph)	35.0	35.0	35.0	35.0	35.0	35.0
% of Trips - Residential	32.9	18.0	49.1			
% of Trips - Commercial (by land use)						
Sports Park				5.0	2.5	92.5

6/5/2009 8:07:59 AM

Urbemis 2007 Version 9.2.4

Combined Summer Emissions Reports (Pounds/Day)

File Name: C:\Documents and Settings\Kurt Legleiter\Application Data\Urbemis\Version9a\Projects\Tracy Holly Sugar Park Landscaping.urb924

Project Name: Holly Sugar Sports Park - Landscape Maintenance

Project Location: San Joaquin County

On-Road Vehicle Emissions Based on: Version : Emfac2007 V2.3 Nov 1 2006

Off-Road Vehicle Emissions Based on: OFFROAD2007

6/5/2009 8:07:59 AM

Construction Unmitigated Detail Report:

CONSTRUCTION EMISSION ESTIMATES Summer Pounds Per Day, Unmitigated

	ROG	NOx	CO	SO2	PM10 Dust	PM10 Exhaust	PM10	PM2.5 Dust	PM2.5 Exhaust	PM2.5	CO2
Time Slice 7/1/2009-7/2/2009 Active Days: 2	3.54	7.98	10.68	0.00	0.01	0.85	0.86	0.00	0.78	0.79	885.84
Fine Grading 07/01/2009-07/02/2009	3.54	7.98	10.68	0.00	0.01	0.85	0.86	0.00	0.78	0.79	885.84
Fine Grading Dust	0.00	0.00	0.00	0.00	0.00	0.00	0.00	0.00	0.00	0.00	0.00
Fine Grading Off Road Diesel	3.49	7.90	9.21	0.00	0.00	0.85	0.85	0.00	0.78	0.78	758.01
Fine Grading On Road Diesel	0.00	0.00	0.00	0.00	0.00	0.00	0.00	0.00	0.00	0.00	0.00
Fine Grading Worker Trips	0.05	0.08	1.47	0.00	0.01	0.00	0.01	0.00	0.00	0.01	127.83

Phase Assumptions

Phase: Fine Grading 7/1/2009 - 7/2/2009 - Default Fine Site Grading Description

Total Acres Disturbed: 282

Maximum Daily Acreage Disturbed: 0

Fugitive Dust Level of Detail: Default

20 lbs per acre-day

On Road Truck Travel (VMT): 0

Off-Road Equipment:

5 Tractors/Loaders/Backhoes (50 hp) operating at a 0.55 load factor for 8 hours per day

CULTURAL RESOURCE ASSESSMENT

OF THE HOLLY SUGAR SPORTS PARK

PROJECT AREA, SAN JOAQUIN

COUNTY, CALIFORNIA

Prepared for

De Novo Planning Group
4630 Brand Way
Sacramento, California 95819

Prepared by

Peak & Associates, Inc
3161 Godman Avenue, Suite A
Chico, CA 95973

April 7, 2009
(Job #08-108)

INTRODUCTION

De Novo Planning Group is currently preparing an EIR for the Holly Sugar Sports Park on behalf of the City of Tracy ("Project"). The park site includes a 150-acre active sports park area, which consists of 18 soccer fields of various sizes, 16 baseball fields, 5 softball fields, four football fields, and a football/soccer stadium with lights, bleachers and a PA system. Other site improvements include children's play areas, restrooms, concession areas, bleachers, parking areas, landscaping and utilities. The project also includes an 86-acre passive recreation area to the south of the active sports park site, which will serve as a land use buffer between the active park uses and the rural residences currently located to the south of the project area. A 46-acre future expansion area is also included in the analysis in order to provide the City with flexibility to expand the park site as demand increases over time. The Project area totals 282 acres.

De Novo is coordinating with the San Joaquin Council of Governments (SJCOG) to include the project site in the San Joaquin County Multi-Species Habitat Conservation and Open Space Plan (SJMSCP). De Novo is also coordinating with San Joaquin LAFCO to assist the City with annexation of the park site into the City limits.

Peak & Associates is assisting De Novo Planning Group with the cultural resource assessment of the Project. The Project is located in the unincorporated area north of the City of Tracy, north of Larch Road, west of Tracy Boulevard, and east of Corral Hollow Road. The Project is located in Township 2 South, Range 5 East in the El Pascadero Land Grant and is plotted on a copy of the United States Geological Survey (USGS) Union Island 7.5 minute series topographic quadrangle (Map 1).

Melinda A. Peak, Senior Historian, Peak & Associates, Inc. was the Principal Investigator for the study, Neal Neuenschwander, Senior Archeologist, Peak & Associates, Inc. was Lead Surveyor, and archeologist Michael Lawson assisted with the reconnaissance survey (resumes, Appendix A).

REGULATORY CONTEXT

State Regulations

For the purposes of CEQA, an historical resource is a resource listed in, or determined eligible for listing in the California Register of Historical Resources (CRHR). When a project will impact a site, it needs to be determined whether the site is an historical resource, which is defined as any site which:

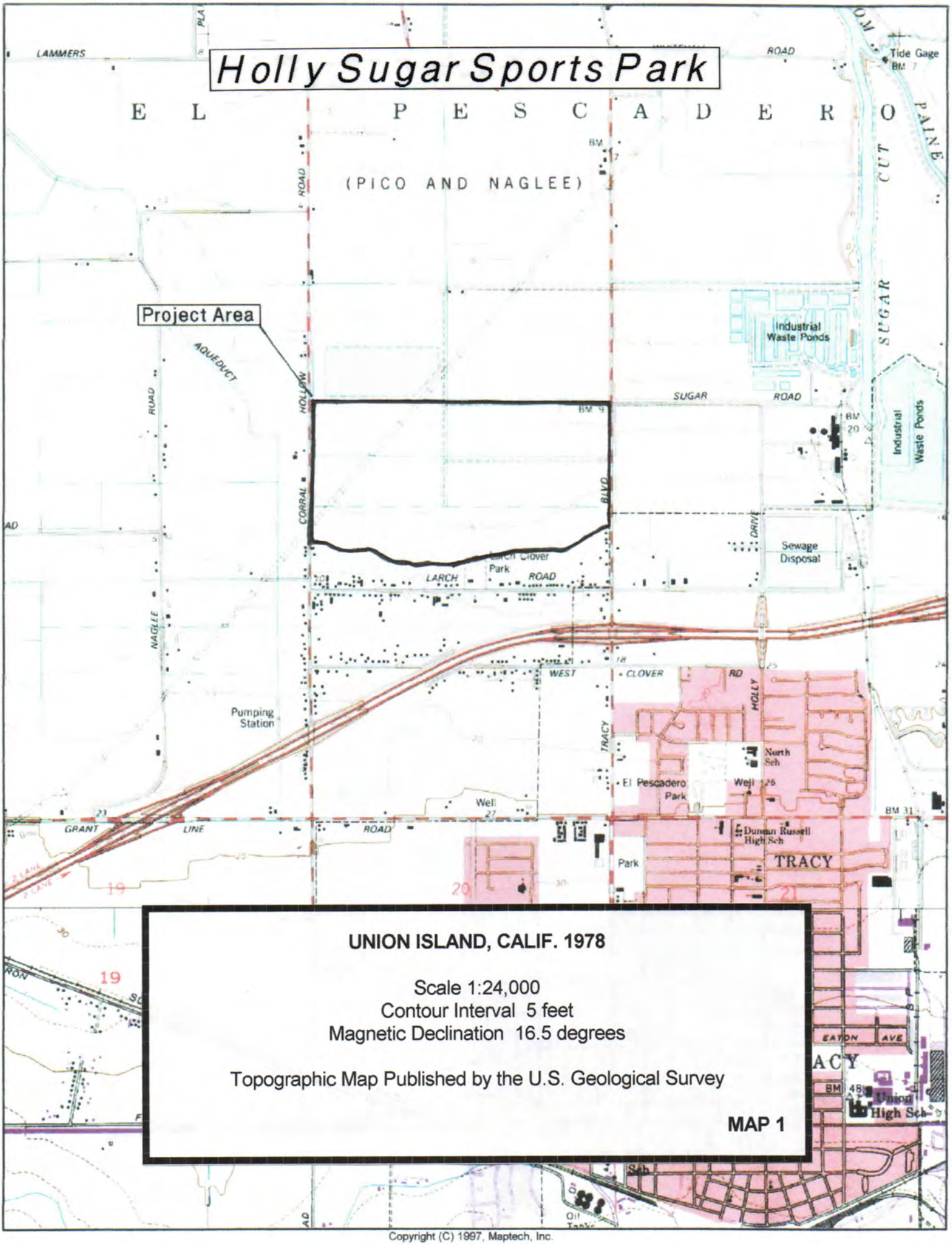

UNION ISLAND, CALIF. 1978

Scale 1:24,000
Contour Interval 5 feet
Magnetic Declination 16.5 degrees

Topographic Map Published by the U.S. Geological Survey

MAP 1

Copyright (C) 1997, Maptech, Inc.

(A.) Is historically or archeologically significant, or is significant in the architectural, engineering, scientific, economic, agricultural, educational, social, political or cultural annals of California; and

(B) Meets any of the following criteria:

1. Is associated with events that have made a significant contribution to the broad patterns of California's history and cultural heritage;

2. Is associated with the lives of persons important in our past;

3. Embodies the distinctive characteristics of a type, period, region, or method of construction, or represents the work of an important creative individual, or possesses high artistic values; or

4. Has yielded, or may be likely to yield, information important in prehistory or history.

CULTURAL HISTORY

Archeological Background

Between 1893 and 1901, J.A. Barr (an avocational archeologist) excavated many prehistoric mounds in the Stockton area. He collected nearly 2000 artifacts during the course of his uncontrolled digging. H.C. Meredith was another avocational, who also pursued collecting in the same Stockton locality. Meredith (1899, 1900) did publish a compilation of his own and Barr's findings, and these appear to constitute the earliest accounts of Delta "archeology." Holmes (1902), from the Smithsonian Institution, further elaborated on the Delta or Stockton District archeology and presented illustrations of artifacts collected by Meredith and Barr. It was Elmer J. Dawson who first recognized that there had been cultural changes through time in the northern San Joaquin Valley locale. Although he was also an avocationalist, Dawson understood the necessity of keeping accurate notes on grave associations and provenience of artifacts. He collaborated with W.E. Schenck to produce an overview of northern San Joaquin Valley archeology (Schenck and Dawson 1929). The overview contained information on over 90 prehistoric sites as well as data on all previous collectors.

By 1931, the focus of archeological work was directed towards the Cosumnes River locality, where survey and exploration were conducted by Sacramento Junior College (Lillard and Purves 1936). Excavation data, in particular from the stratified Windmiller site (CA-SAC-107), suggested three temporally distinct cultural traditions: Early, Transitional, and Late. As data accumulated from the excavation of other mounds in the Delta and lower Sacramento Valley by Sacramento Junior College and the University of California, Berkeley, research horizons expanded.

In 1939, Lillard, Heizer, and Fenenga presented the concept of a tripartite or three-horizon cultural sequence, with a fourth horizon representing the historic or post-contact period. The sequence was based on discrete changes in ornamental artifacts, projectile point types, other tool forms, mortuary practices, and on observed differences in soils within the sites. The authors did not attempt to assign dates to the three horizons, but they did discuss the progressive degree of bone mineralization from the Late to the Early Horizon. They also directed attention to the increased soil induration in the same order as the three Horizons -- Early Horizon, 2500 B.C.; Middle Horizon, 1500 B.C.; and Late Horizon, A.D. 500. They based their argument on an assessment of artifactual cross-dating, soil development, and stratigraphy.

Beardsley (1954) later refined the sequence, as have other investigators concerned with the prehistory of the region. Beardsley's revisions of the Delta sequence extended this system to include the San Francisco Bay region. Other studies by Heizer (1949) and Ragir (1972) focused on an elaboration and refinement of the Early Horizon. The Middle Horizon and the Late Horizon unfortunately have not been as well defined. Ragir (1972) proposed to substitute alternative designations: Windmiller Culture for Early Horizon, Cosumnes Culture for Middle Horizon, and Hotchkiss Culture for the Late Horizon. She argued that these new designations provided a more flexible system to accommodate new developments that might be discovered.

The Windmiller Culture (Early Horizon) is characterized by ventrally-extended burials (some dorsal extensions are known), with westerly orientation of heads, a high percentage of burials with grave goods, frequent presence of red ochre in graves, large projectile points (of which 60 percent are of materials other than obsidian), rectangular *Haliotis* beads, *Olivella* shell beads (types A1a and L), rare use of bone, some use of baked clay objects, and well-fashioned charmstones, usually perforated.

The Cosumnes Culture (Middle Horizon) displays considerably changes form the preceding cultural expression. The burial mode is predominately flexed, with variable cardinal orientation and with some cremations present. A lower percentage of burials with grave goods, with ochre staining common in graves, *Olivella* beads of types C1, F, and G,

abundant use of green *Haliotis sp.* rather than red *Haliotis sp.*, perforated canid teeth, asymmetrical and "fishtail" charmstones that are usually unperforated. Other diagnostic features include cobble mortars and evidence of wooden mortars, extensive use of bone for tools and ornaments, large projectile points with considerable use of rock other than obsidian, and use of baked clay.

For Hotchkiss Culture (Late Horizon), the burial pattern retains the use of the flexed mode, and there is widespread evidence of cremation, lesser use of red ochre, heavy use of baked clay, *Olivella* beads of types E and M, extensive use of *Haliotis* ornaments of many elaborate shapes and forms, shaped mortars and cylindrical pestles, bird bond tubes with elaborate geometric designs, and clam shell disc beads. Other traits include small projectile points that indicate the introduction of the bow and arrow, flanged tubular pipes of steatite and schist, and use of magnesite (Moratto 1984:181-183). The characteristics noted are not all inclusive, but cover the more important traits.

Schulz (1981), in an extensive examination of the central California evidence for the use of acorns, used the terms Early, Middle, and Late complexes. While the reference is not altogether clear, Schulz seemingly uses the term "complex" to refer to particular archeological entities, above called "Horizons," as defined in this region. Ragir's (1972) cultures are the same as Schulz's term complexes.

Bennyhoff and Hughes (1984) have presented alternative dating schemes for the Central California Archeological Sequence. The primary emphasis is a more elaborate division of the horizons to reflect what is seen as cultural/temporal changes within the three horizons and a compression of the temporal span.

Other chronologies proposed have been suggested. Fredrickson (1973) makes an important proposal that is correlated with Bennyhoff's (1977) recent work. The particular archeological cultural entities Fredrickson defines, based on the work of Bennyhoff, are patterns, phases, and aspects. Bennyhoff's (1977) work in the Plains Miwok area is the best definition of the Cosumnes District, which most likely conforms to Fredrickson's term pattern. The interested reader can refer to Fredrickson for full details of the entities. Fredrickson also proposes periods of time associated heavily with economic modes, and thus provides a temporal term for comparing contemporary cultural entities. This scheme corresponds with Willey and Phillips' (1958) earlier "tradition," although tied more specifically to the archeological record in California.

Period and Dating of Commencement

Fredrickson	Bennyhoff, Heizer, and Schulz
Upper Emergent -- A.D. 1500	Phase 2, Late Horizon -- A.D. 1500
Lower Emergent -- A.D. 300	Phase 1, Late Horizon -- A.D. 500
Upper Archaic -- 2000 B.C.	Middle Horizon -- 1000 B.C.
Lower Archaic -- 6000 B.C.	Early Horizon -- 2500 B.C.
Paleo-Indian -- 10,000 B.C.	
Early Lithic	

From: Bennyhoff and Heizer 1958; Fredrickson 1973; Schulz 1981

Although the Central California Taxonomic System has some application to other areas of prehistoric central California, there are distinct temporal and spatial limits. There is an increasing recognition of these limits as archeologists have found their date simply does not fit this scheme comfortably. This problem is particularly apparent for the San Francisco Bay region. Nevertheless, the system is still widely used despite the many attempts to find new integrative models for both regional and area syntheses (Moratto 1984:237).

Ethnology

The Project lies within the ethnographic territory of the Yokuts people. The Yokuts were members of the Penutian language family which held all of the Central Valley, San Francisco Bay Area, and the Pacific Coast from Marin County to near Point Sur. The Yokuts differed from other ethnographic groups in California as they had true tribal divisions with group names (Kroeber 1925). Each tribe spoke a particular dialect, common to its members, but similar enough to other Yokuts that they were mutually intelligible (Kroeber 1925).

The Yokuts held portions of the San Joaquin Valley from the Tehachapis in the south to Stockton in the north. On the north they were bordered by the Plains Miwok, on the west by the Saclan or Bay Miwok and Costonoan peoples. Although neighbors were often from distinct language families, differences between the people appear to have been more influenced by environmental factors as opposed to linguistic affinities. Thus the Plains Miwok were more similar to the nearby Yokuts than to foothill members of their own language group. Similarities in cultural inventory co-varied with distance from other groups and proximity to culturally diverse people. The material culture of the southern San Joaquin Yokuts was therefore more closely related to that of their non-Yokuts neighbors than to that of Delta members of their own language group.

The best estimates place the pre-contact population for each of the southern tribes at 350 persons. For the northern groups, population figures have been calculated on the basis of average population density per square mile. The highest density was 10+ persons per square mile, according to these figures, achieved along major drainages. On the plains, primarily east of the San Joaquin River, the average density was only two to three persons per square mile, while even fewer persons occupied the drier foothills to the west of the valley (Wallace 1978a:448; Wallace 1978b:462).

The archeology of the northernmost San Joaquin Valley suggests that the Yokuts were relative latecomers to the area. Cultural differentiation from the Plains Miwok culture occurred before A.D. 1500. Artifacts recovered from sites in the western side of the San Joaquin Valley in Merced and Fresno counties have been assigned to the time between A.D. 1500-1600 and the beginning of contact with the Spanish. Linguistic data suggest that the Northern Valley Yokuts were pressured by their eastern neighbors -- the Monache -- who moved down the Sierra foothills and caused Yokuts to spread northward across the valley into what had formerly been Costanoan and Miwok territory. This territorial shift took place over a span of two hundred years, leaving the Yokuts well-established in the San Joaquin Valley before the first Spanish expeditions (Wallace 1978b:463). The Southern Valley Yokuts may have been established in their ethnographic territory somewhat earlier, perhaps as early has 2000 years ago, although physical signs of human occupation near Buena Vista Lake have been dated at 6000 B.C. (Wallace 1978a:449).

The most northern Yokuts tribes subsisted in much the same way as did their Bay Miwok neighbors, who relied heavily on acorn and salmon as dietary staples. Because of their dependence on riverine resources, the Northern Yokuts situated large villages near the San Joaquin River and its tributaries. They built their villages on low mounds to protect them from seasonal flooding caused by rains and rivers swollen by melting Sierran snows. To the west side of the valley, the Yokuts concentrated in smaller settlements along semipermanent drainages in the foothills (Wallace 1978b:463-464). Southern tribes also concentrated along waterways and near the marshes where waterfowl and fish were plentiful (Wallace 1978a:449-450).

Geese, ducks, mudhens, and other waterfowl provided a substantial portion of Yokuts diet. Birds were easy prey for hunters who lured them with decoys and caught them with specialized techniques. They also raided eggs from the nests. Seeds of grasses, tule, and flowering herbs added variety to Yokuts meals. The Yokuts ate tender leaves and stems of clover, fiddle-neck, alfilaria, other plants, and gathered roots of grassnuts and tule. Like the neighboring Costanoans, the Yokuts practiced controlled plant management by burning vegetation (Wallace 1978a:450; 1978b:464). Hunting large mammals apparently was less

important to sustain the Yokuts, although they did hunt antelope and elk. Hunters disguised themselves and waited for the animals to come to lakes or sloughs to drink, then snared individual animals or shot into the herd and turned the fleeing animals into fenced enclosures. The Yokuts organized communal jackrabbit drives and snared small animals and some birds (Latta 1949:141-143; Wallace 1978a:450).

Northern Yokuts built small houses with tule mats that covered wooden frameworks. These dwellings were round to oval, 25 to 40 feet in diameter, with hard-packed dirt floors excavated two feet below ground level, and served as single-family dwellings. The southern tribes also built large, gable-roofed communal residences that were partitioned to accommodate ten or more families. These structures were covered with tule stalks sewn together. In some instances, one house sheltered the people of an entire village. Earth-covered sweathouses, which measured up to 15 feet in length, were used by men for daily sweatbaths and in winter for sleeping. Latta (1949:96-97) recounted that sweathouses were built at the downstream limits of a village so that the bathing would not contaminate the water used by the villagers. Northern villages featured very large earth-covered assembly structures, but southern villages did not include these ceremonial buildings. One communal structure found at a village site on Los Banos Creek measured 84 by 93 feet (Kroeber 1925:521-523; Latta 1949:87-97; Wallace 1978a:450-451; 1978b:464-465). Arrangement of the buildings in a village was orderly, as Stephen Powers described:

> (The Yokuts) display in their encampments a military precision and regularity which are remarkable. Every village consists of a single row of wigwams, conical or wedge-shaped, generally made of tule, and just enough hollowed out within so that the inmates may sleep with the head higher than the feet, all in perfect alignment, and with a continuous awning of brushwood stretching along in front. In one end-wigwam the village captain; in the other, the shaman or *si-se'ro* (Spanish, *hechizero)*. In the mountains there is some approach to this martial array, but it is universal on the plains [Powers 1877:370-371].

Latta (1949:99) reported that a village of 200 to 300 Yokuts might have four or five large houses that were used for ten or twelve years or until a family member died, and which time the Indians burned the house in which the death had occurred. If a sick or aged person died outside the dwelling, the family did not burn the house. When a Northern Yokuts died, his body was cremated or buried in a flexed position. Southern tribes normally buried their dead, although they did cremate shamans, persons who died away from their village and, among the Tachi, persons of great importance (Wallace 1978b:468).

The most devastating impacts of the Spanish colonization effort were not the result of military conflicts, but came from Old World diseases newly introduced to the native people. Three major epidemics swept through the missions: a respiratory virus at Mission Santa Clara in 1777, pneumonia and diphtheria that killed children from Mission San Carlos to San Luis Obispo, and the devastating measles epidemic that killed at least 1600 natives at missions from San Francisco to Santa Barbara (Castillo 1978:103). These epidemics at the missions were followed in 1833 by a severe malaria epidemic that claimed thousands of lives and virtually destroyed many villages and tribes. Up to three-quarters of the population in the San Joaquin Valley was killed by this contagious disease, which was brought to California by a party of Hudson's Bay Company fur trappers from the Oregon country. In 1834, the Mexican government desecularized the missions and many of the Indian residents returned to their former territories, where they survived by a combination of strategies that included traditional hunting and gathering and livestock raiding (Wallace 1978a:459-460; Wallace 1978b:468-469).

History

In 1848, after James Marshall discovered gold at Sutter's Mill in Coloma, thousands of people flocked to California to seek their fortunes. Although some people took overland trails to California, arriving in Sacramento, most traveled the faster route by sea, arriving in San Francisco. With thousands of miners arriving weekly, San Francisco became the initial staging area for the many people heading off to the gold fields of the Sierra Nevada foothills. The Project lies along one of the routes to the southern mining region. This route ran east from Mission San José past Livermore, over Altamont Pass, to Mountain House before continuing to Stockton, Sacramento, or the gold camps beyond those cities.

In 1849, when Thomas Goodall (or Goodale) constructed an adobe building along the route, he founded Mountain House, west of the Project. The building served as a rest stop for stagecoaches, travelers and stockmen. In 1850 Simon Zimmerman purchased the stop and through his hard work, Mountain House became a famous way station on the road to Stockton (Wood 1883:464-65; Thompson and West 1878:25).

The only problem with this route was the Old River branch of the San Joaquin River. In order to travel to Stockton or the southern mines by this route, people needed to cross the river. By the early 1850s, Maurice Byrnes established a ferry on the El Pescadero land grant north of the Project. By the mid-1850s German immigrant Henry Mohr assumed control of Byrnes (Burns) Landing. In addition to running the ferry, Mohr also established a grain and stock farm on Union Island, across Old River, north of the Project. Seeing Mohr's success other farmers moved into the area, acquired land, and developed their own farms (Tinkham 1923: 963).

The arrival of permanent settlers led to the discovery of coal deposits in nearby Corral Hollow in the hills west of the Project in 1856. In this pre-railroad era the only way to ship the coal to San Francisco was down the Old River. Between 1856 and 1861 the Corral Hollow coal companies shipped approximately 1,200 tons of coal from Mohr's landing. This arrangement worked well until the winter of 1861-62 when heavy rains caused flooding throughout the state. Apparently the Old River's high waters destroyed Mohr's Ferry and landing (Tinkham 1923:963).

When Mohr's ferry and landing were destroyed, people in the area recognized the need for a new settlement on higher ground. The most logical place for the new town, subsequently named for the property owner, was on property owned by Erick P. Wicklund, a Swedish farmer. His property was located about one-third of a mile southwest of the old Mohr's Landing site. With the continued expansion of the coal mining industry and its related shipments, and the increase in grain farming in the area, Wicklund soon became the local center for transportation and trade. The town's structures included a coal depot and coal bunkers, a hotel, a warehouse, and a blacksmith shop. Wicklund's success continued until 1868 when it reached its peak. At that time a daily stage provided service to Antioch and a steamer made two trips per week between San Francisco and the Mohr's Landing at Wicklund (Tinkham 1923:963,301).

With the arrival of the Central Pacific Railroad in 1869 and the establishment of the community of Ellis to serve as a coal station for the trains, Wicklund's popularity soon diminished. Accelerating the demise of the town, the Corral Hollow coal mines played out, leaving Wicklund with little shipping business for Mohr's landing and causing Wicklund residents to move their houses to Ellis due to its close proximity to the railroad. By November 1870, the town had over 45 buildings (Gilbert 1879:130).

Despite the loss of the shipping business and most of the residents, some people remained in Wicklund for at least ten more years. In 1879 the hotel, blacksmith shop, and a warehouse still remained, but the completion of another branch of the Central Pacific and the subsequent establishment of Bethany in 1879 led to the final abandonment of Wicklund (Gilbert 1879:130).

Unlike other areas that experienced a population growth with the arrival of the railroad, the project area's population did not expand significantly. The lack of a consistent year-around source of water limited the agricultural potential to dry farming crops such as wheat or other grain products. The water problem was not addressed until well after the turn of the century when first the federal government and later the state orchestrated large water projects that supplied central and southern California with water.

In 1912, the Naglee-Burk Irrigation Association was formed, and three years later, in 1915, the West Side Irrigation District was established and soon irrigation water was available and presented new opportunities for farmers located between Tracy and the Old River.

World War was underway in Europe and US Government price supports for sugar beets led to the Pacific Sugar Company to open a mill near the Project. Price supports for sugar beet ended in 1919 and this, together with an infestation of whiteflies led to a decline in sugar beet production, and with it, the fortunes of the Pacific Sugar Company. The plant site was temporarily leased to the Amalgamated Sugar Company and in 1925 was sold to the Holly Sugar Company who still uses the plant for distribution, but has ceased processing sugar beets .

With the additional closure of the Holly Sugar plant in Manteca, acreage devoted to sugar beet production declined dramatically in the area. Alfalfa became the crop of choice for the irrigated fields between the City of Tracy and the Old River, including the land once owned by the Holly Sugar Company including the Project.

The history of the community of Tracy is tied to the railroad. In 1869 the Central Pacific Railroad completed its line through the area and within a few years Lathrop Junction, west of the future town of Tracy, was established to service the railroad. A coaling station was built at the base of Altamont Pass and the small community that sprang up around it became known as Ellis. By 1878, the Central Pacific was constructing a new connecting rail line from Oakland and at the junction with the earlier line Tracy was established. As a railroad created town, Tracy was named after Lathrop J. Tracy, a grain merchant and railroad official from Ohio. Soon after the founding of Tracy, the coaling station at Ellis was closed and the workers, their families, and even two of the former towns hotels were moved east to Tracy (hppt//www.ci.tracy.us/about/history).

Transportation was the main employer in the area until the availability of irrigation water after 1915 led to increased interest, and profits, in agriculture. With agricultural abundance and transportation facilities in place, the two interests came together to assist the US war effort with the creation of the Sharpe Army Depot in 1941. The 720 acre facility was used by the US Army to receive, store, package and ship supplies-including local agricultural products, to forces in the Pacific Theater until its closure in 1976. It was also used to store and maintain heavy equipment and aircraft and at one time employed about 1,200 people.

Another growth-inducing impact to the local area was the creation of the Lawrence Livermore National Laboratory Livermore facility in the hills southwest of Tracy in the

early 1950s to supplement the activities at Los Alamos and the main lab site on the UC Berkeley campus. This Cold War era facility led to a population increase in the neighboring communities of Livermore and Tracy as the workers and their families at the "Lab" settled in.

Increasing land values in the San Francisco bay area in the past few decades have led to a spur in population growth in the City of Tracy and surrounding areas. The creation of the Holly Sugar Sports Complex is keeping with the tradition of municipalities balancing growth with public recreation needs and will undoubtedly be a long-term asset as the areas population continues to increase.

RESEARCH

A review of literature maintained by the Central California Information Center of the California Historical Resources Information System at California State University, Stanislaus was conducted on February 11, 2009 for the Project and one-quarter mile radius (Appendix B). According to the Central California Information Center, no previously identified prehistoric period cultural resources are known within, or within a 1/4 mile radius of the Project. Four historic period residences have been recorded near the Project, and the Bellota-Newark transmission line, assigned the designation P-39-004374, crosses through the Project, but this segment has not been formally recorded. A small, liner-shaped portion of the Project was inspected by archeologists in 2003 (Dougherty et al. 2003).

CONSULTATION

The Native American Heritage Commission was contacted by Peak & Associates for a Sacred Lands review. According to the Commission, there is no record of any Sacred Lands within the Project (Appendix C). Correspondence requesting information and/or comment and a topographic map showing the Project was sent to Katherine Perez on February 26, 2009 (Appendix C). On April 7, 2009, a follow-up phone call message was left with Ms. Perez to make sure that she had received the original correspondence and to once again ask for information and/or comments. No replies have yet been received.

FIELD INSPECTION/METHODOLOGY

A field reconnaissance of the 282 acre Project as delineated on Map 1 was conducted during late February and early March, 2009 by Peak & Associates Staff Archeologist Neal Neuenschwander and archeologist Michael Lawson. A complete, intensive pedestrian inventory of the Project was undertaken by means of parallel transects spaced at intervals of roughly 10 to 15 meters.

The Project is currently used to raise alfalfa. Roads, ditches, and the rows between the alfalfa provided for excellent visibility of the ground surface. The alfalfa crop was young and generally under 10 inches in height and had not yet completely obscured the ground surface. No portion of the project was excluded from the intensive reconnaissance.

FIELD RESULTS

No evidence of prehistoric period activity was observed within the Project. The unrecorded portion of the Bellota-Newark transmission line, P-39-004374, was recorded and supplemental Department of Parks and Recreation (DPR) 523 forms and a location map for the resource, as well as the original site form, are presented in Appendix D.

P-39-004374

The resource consists of two parallel transmission lines with towers spaced at intervals of approximately 760 feet. The two sets of transmission lines are about 50 feet apart. The original transmission lines were built in 1931 by the Pacific Gas and Electric Company as part of the Tiger Creek project located along the Mokelumne River to transport hydroelectric-generated power to the bay area (Baker 2003). The inspected segment is approximately 2950 feet long and crosses through the Project at a bearing of 40 degrees. There are four sets of towers within the Project.

RESOURCE EVALUATION

P-39-004374

A segment of this historic period electrical transmission line system located just west of the Project was recorded by archeologists in 2003 who evaluated the resource and

recommended that the transmission lines were not apparently eligible for listing in the California Register due to the fact that they were not the earliest such lines in the state and did not display original or unusual engineering elements in the design or construction of the lattice towers (Dougherty et al. 2003).

Peak & Associates, Inc. concurs with the 2003 assessment of non-eligibility for this resource. We recommend that P-39-004374 does not appear to qualify as an historic property under the CRHP. No measures to mitigate against the adverse impacts associated with the development of the Project are necessary as no historic properties are present.

RECOMMENDATIONS

General

Should any buried archeological materials be uncovered during the construction, maintenance, and use of the Project, such activities shall cease within 100 feet of the find until the discovery can be evaluated by a professional archeologist. Prehistoric artifacts may include: obsidian and chert flakes and chipped stone tools; ground stone implements (grinding slabs, mortars and pestles) and locally darkened midden soils containing some of the previously listed items plus fragments of bone and fire affected stones. Historic period artifacts generally include: fragments of glass, ceramic and metal objects; milled and split lumber; and structure and feature remains such as building foundations, privy pits, wells and dumps.

If any bone in uncovered that appears to be human, the San Joaquin County coroner must be immediately contacted to evaluate the find. If the remains appear to be of Native American origin, then the coroner contacts the Native American Heritage Commission so that they may assist the coroner in notifying the Most-Likely-Descendants (MLD) for their assistance during the treatment of the remains.

REFERENCES CITED

Baker, Cindy

2003 National Register of Historic Places Evaluation, Mokelumne River Hydroelectric Project, FERC No. 137, Alpine, Amador, and Calaveras Counties, California. Ms. On file, North Central Information Center, California Historical Resources Information System, California State University, Sacramento.

Beardsley, Richard K.

1954 Temporal and Areal Relationships in Central California Archeology (parts 1 and 11). *University of California Archaeological Survey Reports* 24, 25. Berkeley.

Bennyhoff, James A. and Robert F. Heizer

1958 Cross-Dating Great Basin Sites by Californian Shell Beads. *University of California Archaeological Survey Report*, 42:60-92. Berkeley.

Bennyhoff, James A. and Richard E. Hughes

1984 Shell Beads and Ornament Exchange Networks between California and the Great Basin. In The Archaeology of Monitor Valley, 5: Regional Synthesis and Implications, by David H. Thomas. *Anthropological Papers of the American Museum of Natural History*. New York.

Bennyhoff, James A.

1977 Ethnogeography of the Plains Miwok. *Center for Archaeological Research at Davis, Publications* 5. University of California, Davis.

Castillo, Edward D.

1978 The Impact of Euro-American Exploration and Settlement. In *California*, edited by Robert F. Heizer, pp. 99-127. Handbook of North American Indians, vol. 8, William G. Sturtevant, general editor. Smithsonian Institution, Washington, D.C.

Cook, Sherburne F.

1960 Colonial Expeditions to the Interior of California: Central Valley 1800-1820. *University of California Anthropological Records* 16(6):239-292. Berkeley.

Dougherty, John, Cindy Baker, and Mary L. Maniery
2003 A Cultural Resource Assessment for the Proposed Tesla Reclaimed Waterline Project, Alameda and San Joaquin Counties, California. Ms. on file, Central California Information Center, California Historical Resources Information System, California State University, Stanislaus.

Fredrickson, David A.
1973 *Early Cultures of the North Coast Ranges, California*. Unpublished Ph.D. dissertation, Department of Anthropology, University of California, Davis.

Gilbert, Frank T.
1879 *History of San Joaquin County, California*. Thompson and West, Oakland.

Heizer, Robert F.
1949 The Archaeology of Central California: The Early Horizon. *University of California Anthropological Records* 12(1):1-84. Berkeley.

Hinds, Norman E. A.
1952 Evolution of the California Landscape. *California State Department, Division of Mines and Geology Bulletin* 158.

Holmes, W.H.
1902 Anthropological Studies in California. Washington D.C.: *Smithsonian Institution, Report of the U.S. National Museum for 1900*:155-187.

Kroeber, Alfred L.
1925 Handbook of the Indians of California. *Bureau of American Ethnology Bulletin* 78. Washington.

Latta, F. F.
1949 *Handbook of the Yokuts Indians*. Bear State Books, Oildale, California.

Lillard, Jeremiah B. and William K. Purves
1936 The Archeology of the Deer Creek-Cosumnes Area, Sacramento County, California. *Sacramento Junior College, Department of Anthropology Bulletin* 1. Sacramento.

Meredith, H.C.
1900 Archaeology in California: Central and Northern California. In *Prehistoric*

Implements, edited by W.K. Moorehead, pp. 258-294. Robert Clarke, Cincinnati.

Moratto, Michael J.
1984 *California Archaeology*. Academic Press, New York.

Powers, Stephen
1877 Tribes of California. *Contributions to North American Ethnology* 3. U.S. Geographical and Geological Survey of the Rocky Mountain Region. Washington, D.C.

Ragir, Sonia
1972 The Early Horizon in Central California Prehistory. *University of California Research Contributions* 15. Berkeley.

Schenck, W. Egbert and Elmer Dawson
1929 Archaeology of the Northern San Joaquin Valley. *University of California Publications in American Archaeology and Ethnology* 25(4):289-413. Berkeley.

Schulz, Peter D.
1981 *Osteoarchaeology and Subsistence Change in Prehistoric Central California*. Unpublished Ph.D. dissertation, Department of Anthropology, University of California, Davis.

Thompson and West
1878 *Official and Historical Atlas Map of Alameda County, California*. Thompson and West, Oakland.

Tinkham, George H.
1923 *History of San Joaquin County, California*. Historic Record Company, Los Angeles.

True, D.L., Paul Bouey, and Mark Basgall
1981 Archaeological Survey of the Proposed San Luis Drain Project: Kesterson Reservoir to the Sacramento-San Joaquin Delta. Ms. On file, central California Information Center of the California Historical Resources Information System, California State University, Turlock.

Wallace, William J.
1978 Northern Valley Yokuts. In *California*, edited by Robert F. Heizer, pp. 462-470. Handbook of North American Indians, vol. 8, William G. Sturtevant, general editor. Smithsonian Institution, Washington, D.C.

1978 Southern Valley Yokuts. In *California*, edited by Robert F. Heizer, pp 448-461. Handbook of North American Indians, vol. 8, William G. Sturtevant, general editor. Smithsonian Institution, Washington, D.C.

Willey, Gordon R. and Phillip Phillips
1958 *Method and Theory in American Archaeology*. The University of Chicago Press, Chicago.

Wood, M. W.
1883 *History of Alameda County, California.* M. W. Wood, Oakland.

APPENDIX A

Resumes

PEAK & ASSOCIATES, INC.
RESUME

MELINDA A. PEAK
Senior Historian/Archeologist
3941 Park Drive, Suite 20 #329
El Dorado Hills, CA 95762
(916) 939-2405

January 2009

PROFESSIONAL EXPERIENCE

Ms. Peak has served as the principal investigator on a wide range of prehistoric and historic excavations throughout California. She has directed laboratory analyses of archeological materials, including the historic period. She has also conducted a wide variety of cultural resource assessments in California, including documentary research, field survey and report preparation.

In addition, Ms. Peak has developed a second field of expertise in applied history, specializing in site-specific research. She is a registered professional historian and has completed a number of historical research projects. Ms. Peak has been a regular lecturer for courses in the Capital Campus Public History program (California State University, Sacramento), teaching cultural resource law and site-specific research methods.

Through her education and experience, Ms. Peak meets the Secretary of Interior Standards for historian, architectural historian, prehistoric archeologist and historic archeologist.

EDUCATION

M.A. - History - California State University, Sacramento, 1989
Thesis: *The Bellevue Mine: A Historical Resources Management Site Study in Plumas and Sierra Counties, California*
B.A. - Anthropology - University of California, Berkeley

RECENT PROJECTS

Ms. Peak completed the cultural resource research and contributed to the text prepared for the DeSabla-Centerville PAD. She is also currently cultural resource project manager for the FERC relicensing of the South Feather Power Project and the Woodleaf-Palermo and Sly Creek Transmission Lines.

In recent months, Ms. Peak has completed several determinations of eligibility and effect documents in coordination with the Corps of Engineers for projects requiring federal

permits, assessing the eligibility of a number of sites for the National Register of Historic Places. She has also completed historical research projects on a wide variety of topics for a number of projects including the development of navigation and landings on the Napa River, a farmhouse dating to the 1860s, an early roadhouse, Folsom Dam and a section of an electric railway line.

In recent years, Ms. Peak has prepared a number of cultural resource overviews and predictive models for blocks of land proposed for future development for general and specific plans. She has been able to direct a number of surveys of these areas, allowing the model to be tested.

She served as principal investigator for the multi-phase Twelve Bridges Golf Club project in Placer County. She served as liaison with the various agencies, helped prepare the historic properties treatment plan, managed the various phases of test and data recovery excavations, and completed the final report on the analysis of the test phase excavations of a number of prehistoric sites. She is currently involved as the principal investigator for the Clover Valley Lakes project adjacent to Twelve Bridges in the City of Rocklin, coordinating contacts with Native Americans, the Corps of Engineers and the Office of Historic Preservation.

Ms. Peak has served as project manager for a number of major survey and excavation projects in recent years, including the many surveys and site definition excavations for the 172-mile-long Pacific Pipeline proposed for construction in Santa Barbara, Ventura and Los Angeles counties. She also completed an archival study in the City of Los Angeles for the project. She also served as principal investigator for the 1997 coaxial cable removal project for AT&T.

Additionally, she completed a number of small surveys, served as a construction monitor at several urban sites, and conducted emergency recovery excavations for sites found during monitoring. She has directed the excavations of several historic complexes in Sacramento, Placer and El Dorado Counties.

Ms. Peak is the author of a chapter and two sections of a published history (1999) of Sacramento County, *Sacramento: Gold Rush Legacy, Metropolitan Legacy*. She served as the consultant for a children's book on California, published by Capstone Press in 2003 in the land of Liberty series.

PEAK & ASSOCIATES, INC.
RESUME

NEAL J. NEUENSCHWANDER
Staff Archeologist
3941 Park Drive, Suite 20-329
El Dorado Hills, CA 95672
(916) 939-2405

January 2009
Chico Office
3161 Godman Avenue,
Chico, CA 95973
(530) 342-2800

PROFESSIONAL EXPERIENCE

Mr. Neuenschwander has compiled an excellent record of supervision of excavation and survey projects for both the public and private sectors over the past thirty years. He has supervised the fieldwork of over 1,500 projects throughout California, Oregon, Nevada, and southern Idaho.

EDUCATION

M.A. candidate - Anthropology - California State University, Chico
B.A. - Anthropology - California State University, Chico, (with distinction)
B.A. - Geography - California State University, Chico, (with distinction)

RECENT PROJECTS

Neuenschwander assisted in the cultural resource research and contributed to the text prepared for the DeSabla-Centerville PAD. He is also currently assisting the cultural resource project manager in the completion of studies for the FERC re-licensing of the South Feather Power Project and the Woodleaf-Palermo and Sly Creek Transmission Lines. He led the fieldwork effort, and completed site recordation and evaluation.

Neuenschwander's duties at Peak & Associates have included the field direction for multiple site excavations and surveys throughout northern, central, and southern California, Nevada, Oregon and Idaho. In this capacity, he has been responsible for the planning and implementation of every aspect of the fieldwork, analysis, and report production phases. During his twenty-one years with the company, he has developed a reputation for his ability to complete projects on-time and within budget parameters, while at the same time maximizing the recovery and analysis of data for the professional community.

Notable projects under Mr Neuenschwander's direction include the nine week excavation at Clarks Flat in Calaveras County, eleven weeks with a crew of over twenty technicians at the Upper Mountain locale (a remote camp six miles from the nearest road), ten weeks of an over 9,000-acre survey at Elk Hills Naval Petroleum Reserve, and a two-phase excavation

at CA-PLU-88, a site that contained radiocarbon evidence of the some of the earliest habitation of the Sierra Nevada Mountains.

Mr. Neuenschwander also served as the field director for multiple phases of recordation, testing and evaluation for the 172-mile-long Pacific Pipeline Project proposed for construction in Santa Barbara, Ventura, and Los Angeles counties. He also has served as field director or co-director on a number of AT&T fiber optic projects throughout California, Oregon and Idaho.

Prior to 1986, he was co-owner of a private consulting firm in northern California and spent two seasons employed as a seasonal technician with the United States Forest Service.

PEAK & ASSOCIATES, INC.
RESUME

MICHAEL D. LAWSON

6241 Brantford Way
Citrus Heights, CA 92621
916-765-2441

Professional Experience

14 years experience with various private agencies conducting typical fieldwork and laboratory work, as well. Major projects include Twelve Bridges Golf Club and adjacent areas, Clover Valley Lakes, and other smaller projects in several counties. Survey work includes the following counties: Colusa, Sutter, Yuba, Sacramento, El Dorado, Sierra, Butte, Lake, Fresno, Merced, San Joaquin, Placer, Nevada, Amador, Solano, Tuolumne, Kern, Contra Costa, Sonoma, Kings and Tulare. Additional experience includes mapping and processing field notes and photography. Informal visits in an unpaid capacity include: historic and prehistoric sites in Sacramento, Amador, Placer, Sonoma, Marin, Fresno, Modoc and Lassen.

Other site visits include prehistoric sites in Nevada, Arizona, Oregon, South Dakota, Michigan, Ohio and Texas.

Sites visited in Mexico and Guatemala include: El Ray, Uxmal, Tulum, Escaret, Chitchen-Itza, Carocol, Burial Creek Caves and Tikal.

Education

B.A. Anthropology – California State University, Sacramento, 2007
A.A. General Education – American River College, 1993

CSUS field class conducted at Virginia Town, Chinese mining area, Gold Hill, CA

Related Studies

Reproduction of ancient technologies, including flint knapping, blacksmithing, bronze and copper tool and weaponry, including projectiles.

APPENDIX B

Native American Heritage Commission

Sacred Lands File review

Correspondence

STATE OF CALIFORNIA Arnold Schwarzenegger, Governor

NATIVE AMERICAN HERITAGE COMMISSION
915 CAPITOL MALL, ROOM 364
SACRAMENTO, CA 95814
(916) 653-4082
Fax (916) 657-5390
Web Site www.nahc.ca.gov

December 5, 2008

Neal
Peak & Associates, Inc.
3161 Godman Avenue, Suite A
Chico, CA 95973

Sent by Fax: 530-342-0273
Number of Pages: 2

Re: Proposed Holly Sugar Sports Park project, San Joaquin County.

Dear Neal:

A record search of the sacred land file has failed to indicate the presence of Native American cultural resources in the immediate project area. The absence of specific site information in the sacred lands file does not indicate the absence of cultural resources in any project area. Other sources of cultural resources should also be contacted for information regarding known and recorded sites.

Enclosed is a list of Native Americans individuals/organizations who may have knowledge of cultural resources in the project area. The Commission makes no recommendation or preference of a single individual, or group over another. This list should provide a starting place in locating areas of potential adverse impact within the proposed project area. I suggest you contact all of those indicated, if they cannot supply information, they might recommend others with specific knowledge. By contacting all those listed, your organization will be better able to respond to claims of failure to consult with the appropriate tribe or group. If a response has not been received within two weeks of notification, the Commission requests that you follow-up with a telephone call to ensure that the project information has been received.

If you receive notification of change of addresses and phone numbers from any of these individuals or groups, please notify me. With your assistance we are able to assure that our lists contain current information. If you have any questions or need additional information, please contact me at (916) 653-4038.

Sincerely,

Debbie Pilas-Treadway
Environmental Specialist III

Native American Contacts
San Joaquin County
December 5, 2008

Katherine Erolinda Perez
PO Box 717
Linden , CA 95236
(209) 887-3415

Ohlone/Costanoan
Northern Valley Yokuts
Bay Miwok

This list is current only as of the date of this document.

Distribution of this list does not relieve any person of statutory responsibility as defined in Section 7050.5 of the Health and Safety Code, Section 5097.94 of the Public Resources Code and Section 5097.98 of the Public Resources Code.

This list is only applicable for contacting local Native Americans with regard to cultural resources for the proposed Holly Sugar Sports Park project, San Joaquin County.

PEAK & ASSOCIATES, INC.
CONSULTING ARCHEOLOGY

February 25, 2009

Katherine Erolinda Perez
P.O. Box 717
Linden, California 95236

RE: Holly Sugar Sports Park, San Joaquin County

Dear Ms. Perez,

Peak & Associates is assisting the City of Tracy with a study of a 275 acre area located west of Tracy Boulevard, east of Corral Hollow Road, north of Larch, and south of Sugar Road, just north of the city limits of Tracy (see enclosures). The 275 acre area proposed to be developed into a sports park is part of the old Holly Sugar property and is currently used to raise alfalfa.

If you have any information about this area or comments concerning this proposed project, please contact me (Neal Neuenschwander, Staff Archeologist), I can be reached at (530) 342-2800, by fax at (530) 342-0273, by mail at Peak & Associates, 3161 Godman Avenue, Chico, CA 95973, or by e-mail at peakinc@yahoo.com.

Thank you for taking the time reviewing this request and helping ensure protection of California's cultural heritage.

Sincerely,

Neal Neuenschwander
Staff Archeologist

Enclosures: USGS Map, aerial view of the project area.

3941 Park Drive, Suite 20 #329, El Dorado Hills, CA 95762/Phone: (916) 939-2405/Fax: 939-2406/email: peakinc@sbcglobal.net
☒ 3161 Godman Avenue, Suite A, Chico, CA 95973/Phone: (530) 342-2800/Fax: 342-0273/email: peakinc@cmc.net

APPENDIX C

Central California Information Center

February 11th, 2009 Record Search

CENTRAL CALIFORNIA INFORMATION CENTER

California Historical Resources Information System
Department of Anthropology – California State University, Stanislaus
One University Circle, Turlock, California 95382
(209) 667-3307 - FAX (209) 667-3324

Alpine, Calaveras, Mariposa, Merced, San Joaquin, Stanislaus & Tuolumne Counties

Date: 2/11/2009

CCIC File #: 7316L
Project: Holly Sugar Sports Complex, Tracy

Neal Neuenschwander
Peak & Associates, Inc.
3161 Godman Avenue, Suite A
Chico, CA 95973

Dear Mr. Neuenschwander:

We have conducted a records search as per your request for the above-referenced project area located on the Union Island USGS 7.5-minute quadrangle map in San Joaquin County.

Search of our files includes review of our maps for the specific project area and a one-quarter mile radius of the project area (as specified by the client), and review of the National Register of Historic Places, the California Register of Historical Resources, the *California Inventory of Historic Resources* (1976), the *California Historical Landmarks* (1996), and the *California Points of Historical Interest* listing (May 1992 and updates), the Directory of Properties in the Historic Property Data File and the Archaeological Determinations of Eligibility (Office of Historic Preservation current computer lists dated 11-10-2008 and 10-31-2008), GLO Plats, and other pertinent historic maps available at the CCIC for each specific county.

The following details the results of the records search:

Prehistoric or historic resources within the project area:

(1) A segment of the Bellota Newark Transmission Line has been recorded immediately west of the project area as P-39-004374; the portion of this linear resource within the project area has not been recorded.

(2) The following maps reference the project area within the historic Mexican land grant of Rancho El Pescadero:

GLO Plat T2S R5E, Sheet # 44-109, dated 1855-1862

Map Number Three in *History of San Joaquin County, California with Illustrations* (1879; 1968 reprint)

Union Island 1:31680-scale, edition of 1914

Union Island 7.5', 1952 (PR 1968)

Prehistoric or historic resources within a one-quarter mile radius of the project area:

(1) Five recorded historical resources:

Primary # P-39-	**Trinomial CA-SJO-**	**Resource Attributes**
004359	--	Residence, 21191 Corral Hollow Road, Minimal Traditional style
004360	--	Residence, 21193 Corral Hollow Road, Modern Ranch Style
004361	--	Residence, 21349 Corral Hollow Road, National Folk/Craftsman
004362	--	Residence, 12227 Larch Road, Folk Style
004374	--	Bellota Newark Transmission Line

(2) The Union Island 7.5', 1952 (PR 1968) map references buildings other than those referenced above that may be 57 years in age or older and considered as historical resources. We have no further information on file for these historical resources.

Resources known to have value to local cultural groups: None have been formally reported to the CCIC.

Previous investigations within the project area: Three investigations, referenced as follows:

CCIC Report # SJ-	**Author/Date**	
00822	Peak & Associates (1980)	(overview by your company; not copied)
05047	Dougherty et al. (2003)	
06302	Busby (2006)	(overview)

Previous investigations within a one-quarter mile radius of the project area:

CCIC Report #	**Author/Date**
SJ-	
00656	Office of Environmental Quality (1983)
01732	West and Scott (1990)
01733	True et al. (1981)
06303	Busby (2006)
06735	Goetter (2008)

Comments: In accordance with State law, if any historical resources are found during construction, work is to stop and the lead agency and a qualified professional are to be consulted to determine the importance and appropriate treatment of the find.

We understand that you will be conducting an archaeological survey of the proposed project that is the subject of this records search. We look forward to receiving one copy of your report of findings which should include two copies each of site records for all historical resources.

We thank you for contacting this office regarding historical resource preservation. Please let us know when we can be of further service. Please sign and return the attached **Statement of Qualifications for Access to CHRIS Agreement of Confidential Information**. Billing is attached, payable within 60 days of receipt of the invoice.

Sincerely,

E. A. Greathouse, Coordinator
Central California Information Center
California Historical Resources Information System

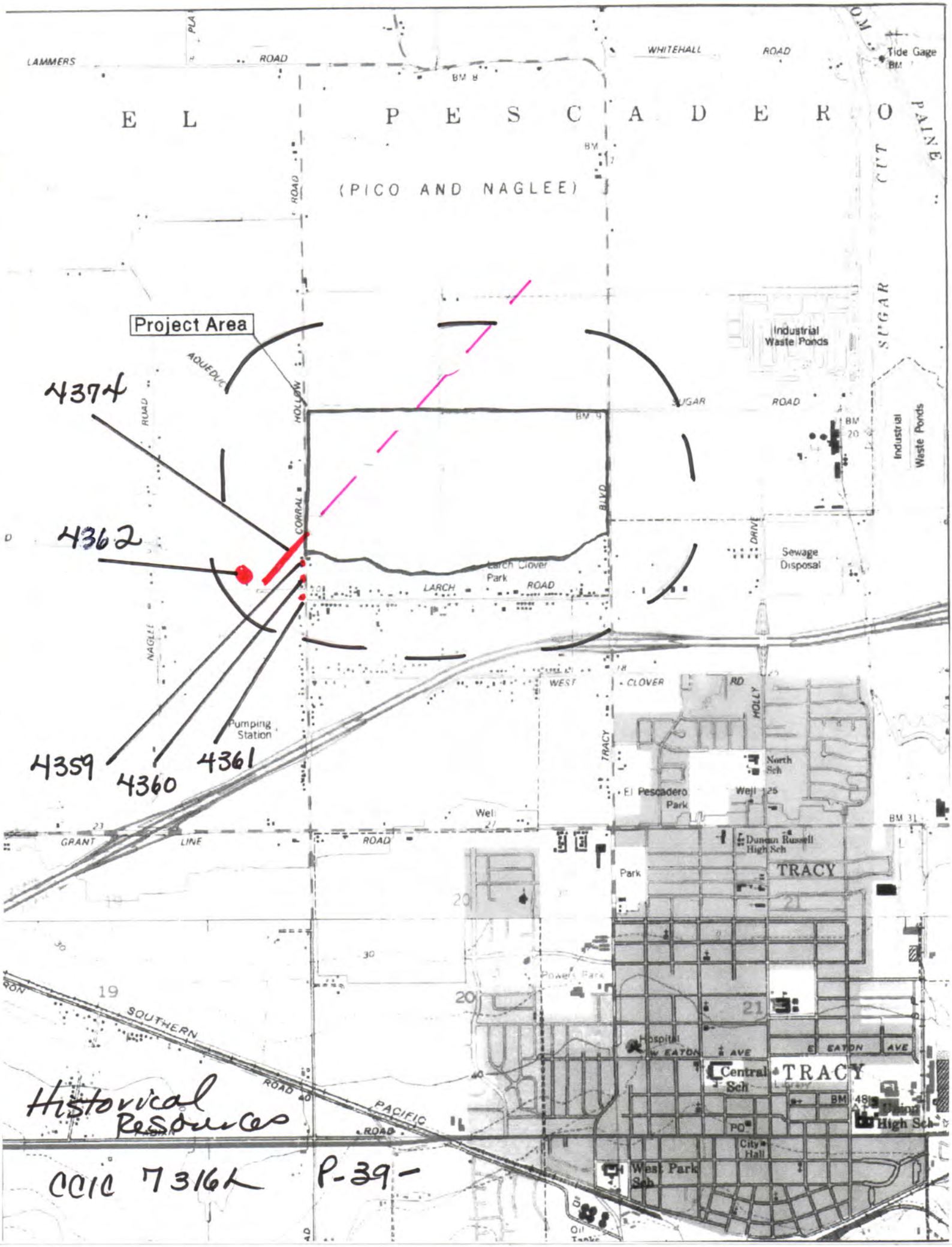
LAMMERS ROAD
WHITEHALL ROAD
Tide Gage
EL PESCADERO
(PICO AND NAGLEE)
Project Area
4374
4362
4359
4360
4361
AQUEDUCT
HOLLOW
CORRAL
BLVD
SUGAR ROAD
Industrial Waste Ponds
Industrial Waste Ponds
Sewage Disposal
Larch Clover Park
LARCH ROAD
NAGLEE
WEST CLOVER RD
HOLLY
TRACY
Pumping Station
North Sch
El Pescadero Park
Well
GRANT LINE ROAD
Duncan Russell High Sch
Park
TRACY
Powers Park
SOUTHERN PACIFIC
Hospital
W EATON AVE
E EATON AVE
Central Sch
TRACY
High Sch
PO
City Hall
West Park Sch
Oil Tanks
Historical Resources
CCIC 7316L
P-39-

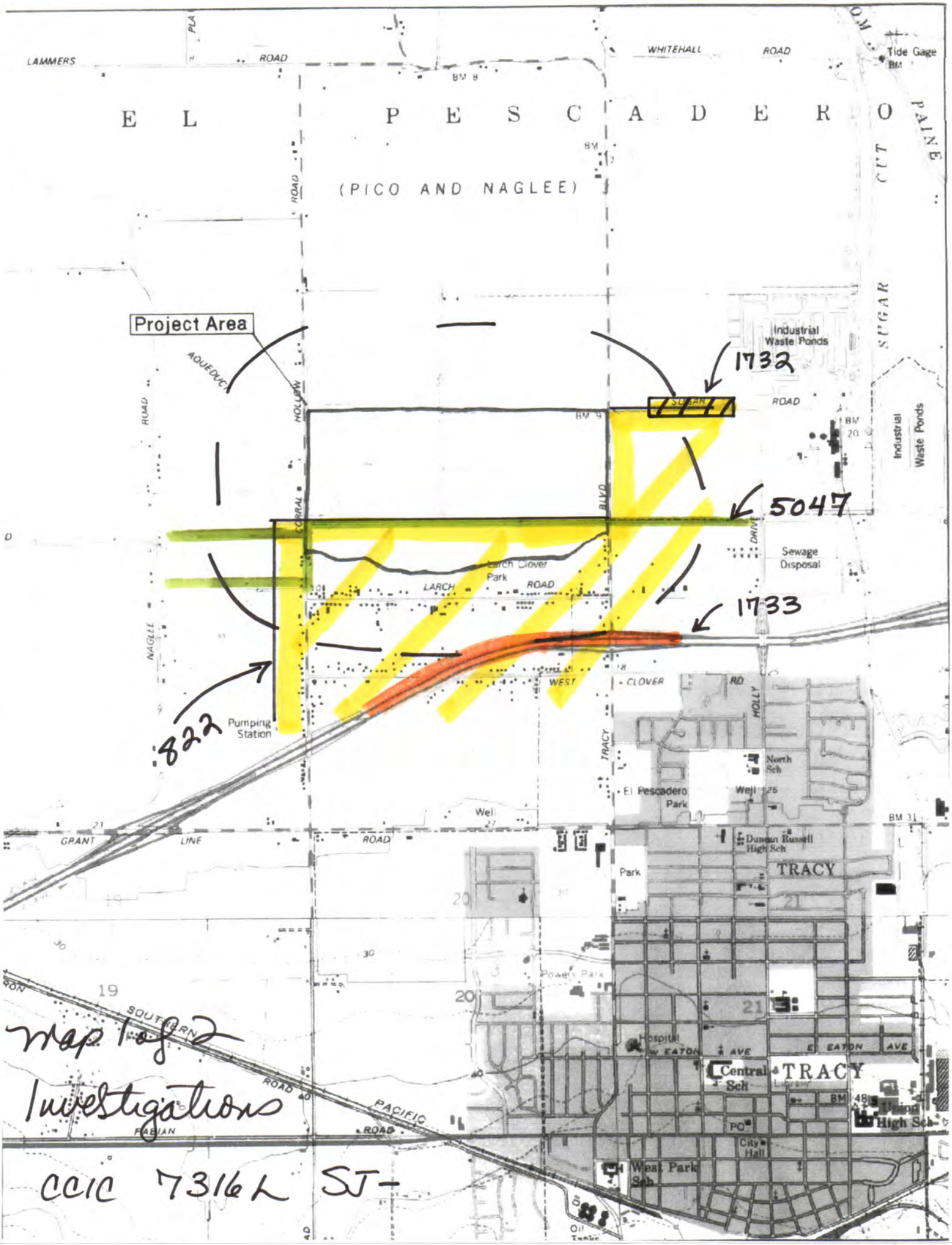

Map 1 of 2

Investigations

CCIC 7316L SJ-

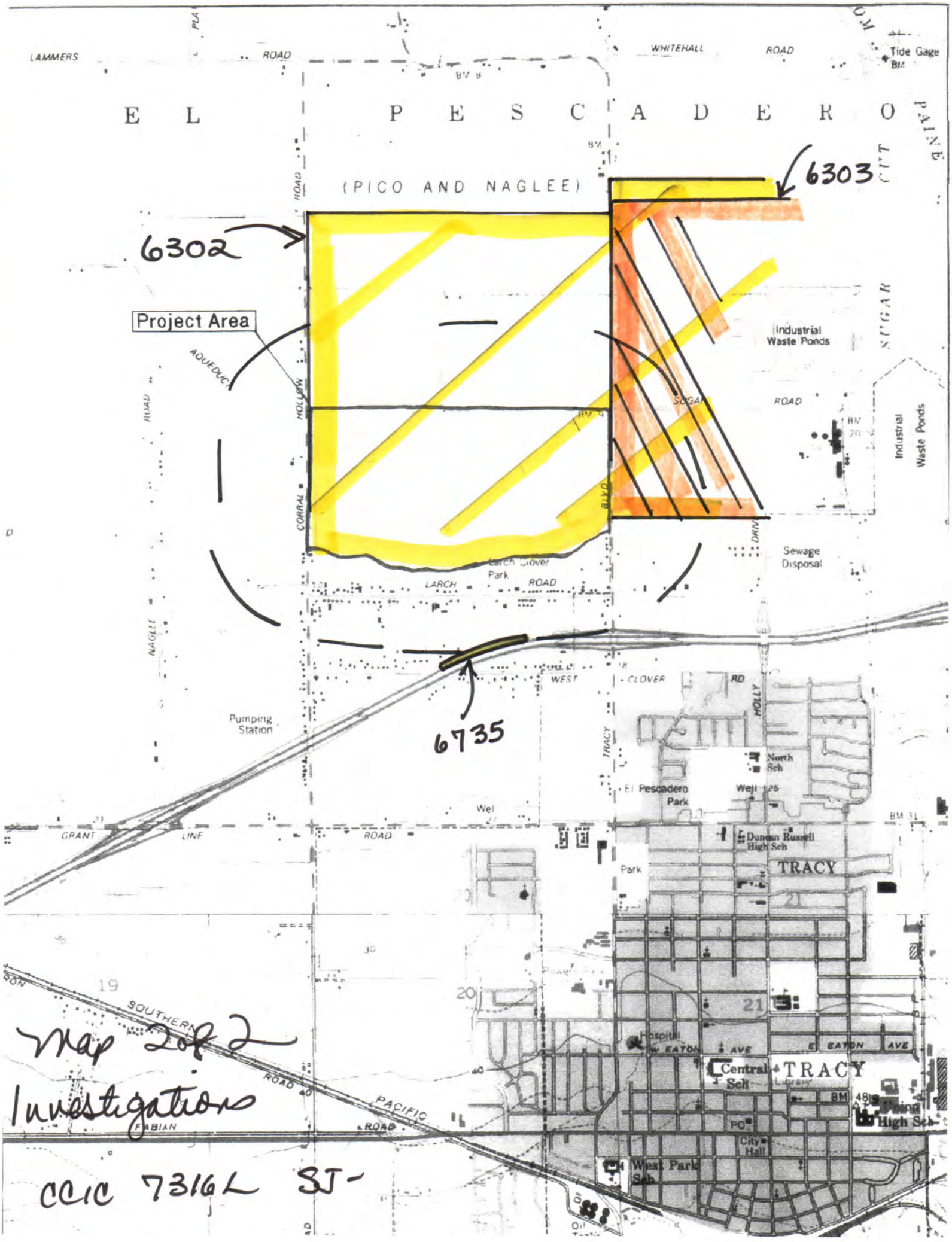

Map 2 of 2

Investigations

CCIC 7316L SJ-

APPENDIX D

P-39-004374

2003 Form

2009 Supplement

State of California - The Resources Agency
DEPARTMENT OF PARKS AND RECREATION
PRIMARY RECORD

Primary # P-39-004374
HRI#
Trinomial
NRHP Status Code

Other Listings
Review Code Reviewer Date

Total 4 pages

Page P1 of P3 ***Resource Name or #: (Assigned by recorder)** TRWP - 26 6/2003

P1. Other Identifier: Bellota Newark Transmission Line

***P2. Location:** ☒ Not for Publication ☐ Unrestricted ***a. County** San Joaquin
and (P2b and P2c or P2d. Attach a Location Map as necessary.)

***b. USGS 7.5' Quad** Union Island **Date** 1978 **T** 2 S; **R** ~~4~~ 5E; Unsectioned land within the El Pescadero Land Grant.

c. Address **City** Tracy **Zip**

d. UTM: (Give more than one for large and/or linear resources) (Continued)

e. Other Locational Data: (e.g., parcel #, directions to resource, elevation, etc., as appropriate)
From the intersection of Tracy Boulevard and Highway 205 in Tracy, California, drive 0.11 miles north on Tracy Boulevard to Larch Road. Turn left (west) on Larch Road and drive 0.98 miles to Corral Hollow Road. Turn right (north) on Corral Hollow Road. Drive 0.2 of a mile north on Corral Hollow Road and park under the transmission lines. The recorded segment of the lines runs from Corral Hollow Road southwest to Larch Road. The segment is located 5 to 10 feet above mean sea level (amsl). Elevations were determined using a USGS topographic map.

***P3a. Description:** (Describe resource and its major elements. Include design, materials condition, alterations, size, setting and boundaries)
This 230 kV high-tension electrical transmission line is supported by steel lattice towers of standard design, which rest on concrete pier foundations on a 125-foot-wide easement. PG&E constructed the line around 1931 as part of its Tiger Creek hydroelectric project on the Mokelumne River to carry power to the bay area (Baker 2003:28).

***P3b. Resource Attributes: (List attributes and codes)** HP39. Other (power lines)

***P4. Resources Present:** ☒ Building ☐ Structure ☐ Object ☐ Site ☐ District ☐ Element of District ☐ Other (Isolates, etc.)

P5a. Photo or Drawing (Photo required for buildings, structures and objects.)

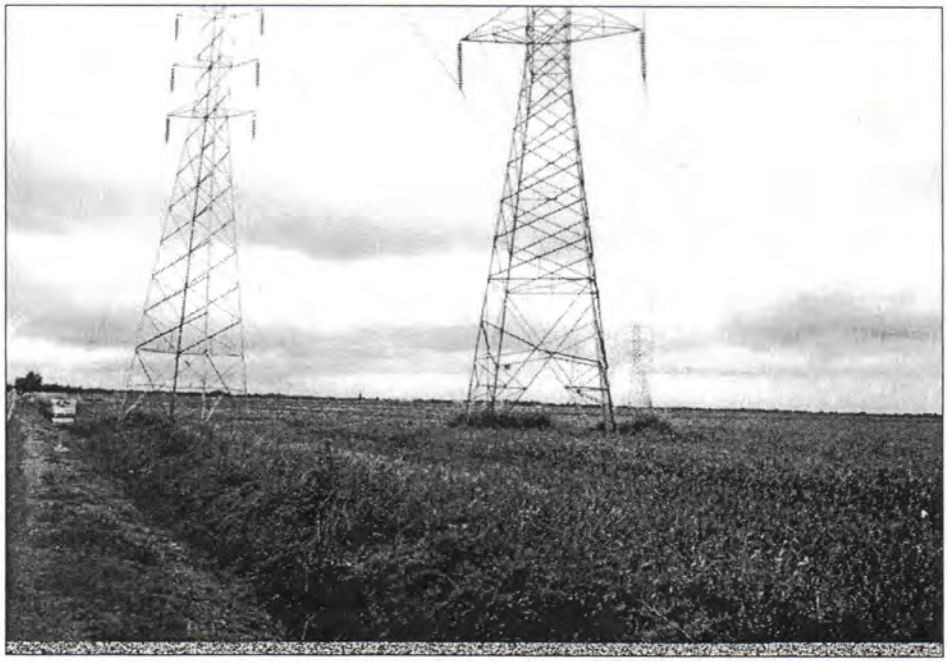

P5b. Description of Photo: (View, date, accession #) View NE, 4/25/2003, Frame 1, Accession #01-949-BW-1

***P6. Date Constructed/Age and Sources:** ☒Historic ☐Prehistoric ☐Both
1931
(continued)

***P7. Owner and Address:**
Pacific Gas and Electric Co.
245 Market Street
San Francisco, CA

***P8. Recorded by: (Name, affiliation and address)** M. Schmidt & C. Baker
PAR Environmental Services, Inc.
P.O Box 160756
Sacramento, CA 95816-0756

***P9. Date Recorded:** 4/25/2003

***P10. Survey Type: (Describe)**
Cultural Resource Inventory/ Reconnaissance

***P11. Report Citation: (Cite survey report and other sources, or enter "None")** Dougherty, J.
2003 *A Cultural Resource Assessment for the Proposed Tesla Reclaimed Waterline Project, Alameda and San Joaquin Counties, California.* On file at the California Energy Commission, Sacramento.
(continued)

***Attachments:** ☐NONE ☒ Location Map ☐ Sketch Map ☒ Continuation Sheet ☐ Building, Structure and Object Record
☐ Archaeological Record ☐ District Record ☐ Linear Feature Record ☐ Milling Station Record ☐ Rock Art Record
☐ Artifact Record ☒Photograph Record ☐ Other (List)

***P2d.** 636330? 4181030?
Zone 10; ~~636255~~ mE/ ~~4181232~~ mN Northeast end of the recorded segment
Zone 10; ~~635966~~ mE/ ~~4180890~~ mN Southwest end of the recorded segment
636100?, 4180760?
UTMs were determined using Toposcout and the NAD 83 datum.

TRW – 83 to NAD 83
DWR – 27 to NAD 27

***P6.**
The transmission lines are shown on the 1952, 1968 and 1978 USGS Union Island quadrangle maps, but are not present on the 1914 USGS Union Island quadrangle map (surveyed 1911-1912).

***P11.**
Baker, C.
2003 *National Register of Historic Places Evaluation, Mokelumne River Hydroelectric Project, FERC No. 137, Alpine, Amador, and Calaveras Counties, California.* PAR Environmental Services, Inc., Sacramento.

United States Geological Survey (USGS)
1978 Union Island, 7.5-minute topographical quad. On file, California State Library, Government Publications, Sacramento.

1968 Union Island, 7.5-minute topographical quad. On file, California State Library, Government Publications, Sacramento.

1952 Union Island, 7.5-minute topographical quad. On file, California State Library, Government Publications, Sacramento.

1914 Union Island, 1:31080 topographical quad. On file, California State Library, Government Publications, Sacramento.

State of California – The Resources Agency
DEPARTMENT OF PARKS AND RECREATION

LOCATION MAP

Primary # P-39-004374
HRI #
Trinomial

Page P3 of P3 * Resource Name or # (Assigned by recorder) TRWP - 26
*Map Name: 7.5 Minute Union Island, CA USGS quadrangle *Scale 1:24,000 * Date of map: 1978

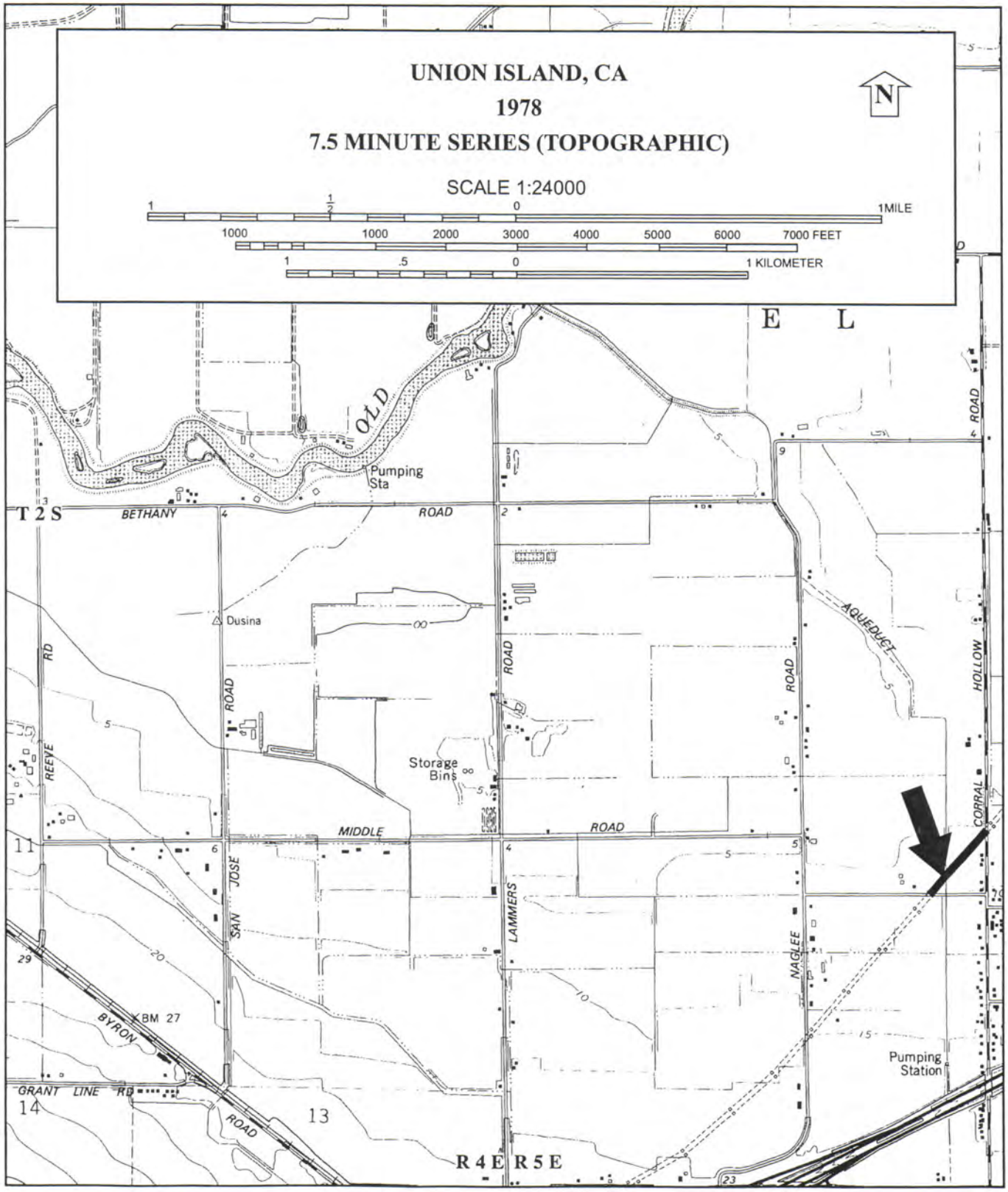

State of California - The Resources Agency
DEPARTMENT OF PARKS AND RECREATION
PRIMARY RECORD

Primary # P-39-004374 Supplement
HRI#
Trinomial

Other Listings:
Review Code: Reviewer: Date:

 Resource Name or #: (assigned by recorder) **P-39-004374 Supplement**

P1. Other Identifier: Bellota-Newark Transmission Line

P2. Location: Not for Publication x Unrestricted (P2b and P2c or P2d. Attach a Location Map as necessary)

a. County San Joaquin
b. USGS 7.5' Quad: Union Island Date: 1978 T. 2 S ;R. 5E ; 1/4 of _1/4 of Sec. Land Grant
c. Address: City: Zip:
d. UTM: (Give more than one for large and/or linear resources) Zone: 10 ; Point A, 636330; Point B, 636915 mE/ Point A 4180985; Point B, 4181665 mN
e. Other Locational Data: (e.g.parcel #, directions to resource, elevation, etc., as appropriate) The western edge of the inspected segment crosses Corral Hollow Road approximately 1050 feet north of the intersection of Corral Hollow Road and Larch Road in North Tracy.

P3a. Description: (Describe resource and it major elements. Include design, materials, condition, alterations, size, setting, and boundaries). The resource consists of two parallel transmission lines with towers spaced at intervals of approximately 760 feet. The inspected segment is approximately 2950 feet long and crosses through the Project Area at a bearing of 40 degrees. There are four sets of towers within the inspected segment.

P3b. Resource Attributes: (List attributes and codes) HP 39 - Other (transmission line corridor)

P4. Resources Present: □ Building x Structure □ Object Site □ District □ Element of a District □ Other (Isolates etc.)

P5a. Photo or Drawing (Photo required for buildings, structures, and objects)

P5b. Description of Photo: (View, date, accession #) Overview looking southwest. 3-04-09

P6. Date Construction Age and Sources: Historic X Prehistoric Both □

P7. Owner and Address: Pacific Gas & Electric Company

P8. Recorded By: (Name, affiliation, and address) Neal Neuenschwander
Peak & Associates, Inc.
3161 Godman Avenue, Suite A
Chico, California 95973

P9. Date Recorded: 3/04/08

P10. Survey Type: (Describe) Intensive reconnaissance

P11. Report Citation: (Cite Survey report and other resources, or enter "none") Cultural Resource Assessment of the Holly Sugar Sports Park Project Area, San Joaquin County, California. Peak & Associates, Inc. 2009

ATTACHMENTS: NONE x Location Map □ Sketch Map x Continuation Sheet □ Building, Structure, and Object Record
□ Archaeological Record □ District Record X Linear Feature Record Milling Station Record □ Rock Art Record
□ Artifact Record □ Photograph Record □ Other: _____

LINEAR FEATURE RECORD

Primary # P-39-004374
HRI #
Trinomial

 Resource Name or #: (Assigned by recorder)

L1. Historic and/or Common Name: Bellota-Newark Transmission Line

L2a. Portion Described: ☐ Entire Resource x Segment ☐ Point Observation **Designation:** Inspected Segment

b. Location of point or segment: (Provide UTM coordinates, legal description, and any other useful locational data. Show the area that has been field inspected on a Location Map) The inspected segment is located between Corral Hollow Road on the west and the north edge of the current Project.

L3. Description: (Describe construction details, materials, and artifacts found at this segment/point. Provide plans/sections as appropriate.) Two sets of parallel transmission towers within a 125 foot wide corridor. Four sets of towers are located within the inspected area. The sets of towers are approximately 760 feet apart and cross the Project Area at a bearing of 40 degrees.

L4. Dimensions: (In feet for historic features and meters for prehistoric features)

a. Top Width: 125 foot wide easement
b. Bottom Width: 125 foot wide easement
c. Height or Depth: Unknown
d. Length of Segment: 2950 feet

L5. Associated Resources:

L4e. Sketch of Cross-Section (include scale) **Facing:**

L6. Setting: (Describe natural features, landscape characteristics, slope, etc., as appropriate.) Level agricultural land in the Central Valley.

L7. Integrity Considerations: Features designed to inhibit climbing have been added to the eastern-most of the two towers.

L8a. Photograph, Map or Drawing See pages 3/7 to 6/7.

L8b. Description of Photo, Map, or Drawing (View, scale, etc.) See pages 3/7 to 6/7.

L9. Remarks:

L10. Form Prepared by: (Name, affiliation, and address) Neal Neuenschwander, Peak & Associates, Inc 3161 Godman Avenue, Suite A, Chico, California

L11. Date: 3/04/09

DPR 523E (1/95)

A) P-39-004374. View of the transmission line corridor looking northeast.

B) P-39-004374. View of an anti-climbing device on the eastern-most tower.

C) P-39-004374. View of one of the western-most tower's concrete support base.

D) P-39-004374. View of one of the eastern-most tower's concrete support base.

E) P-39-004374. View of a typical western-most tower looking northwest.

F) P-39-004374. View of a typical eastern-most tower looking northeast.

State of California — The Resources Agency
DEPARTMENT OF PARKS AND RECREATION

LOCATION MAP

Primary # P-39-004374
HRI#
Trinomial

*Resource Name or #: P-39-004374

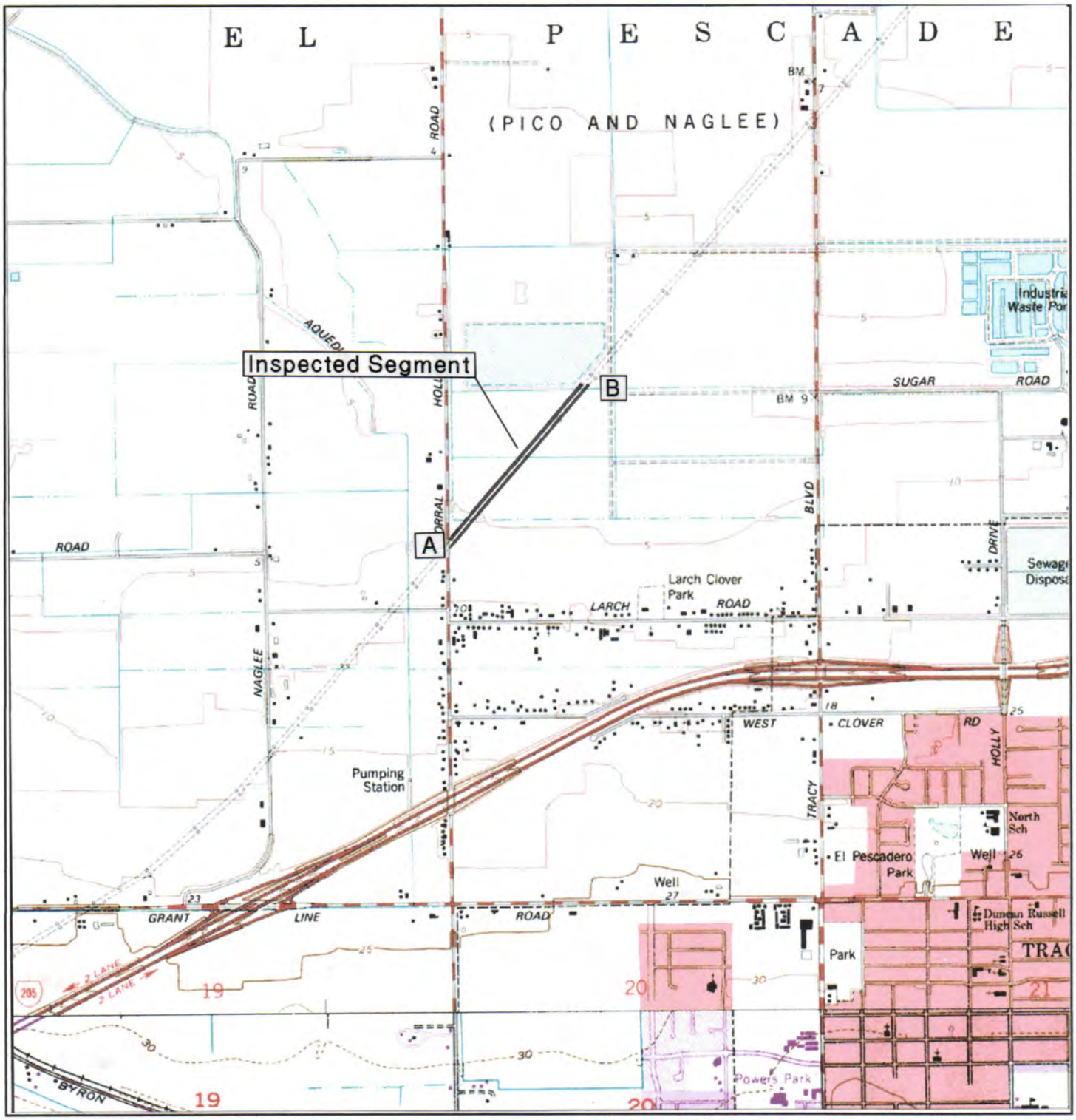

*Map Name: Union Island, Calif.
DPR 523J (1/95)

*Scale: 1:24,000 *Date of Map: 1978
*Required information

Wallace Kuhl
& ASSOCIATES INC

Preliniary Geotechnical Engineering
and Geologic Hazards Report
HOLLY SUGAR SPORTS PARK
WKA No. 8404.02
February 27, 2009

Prepared For:
De Novo Planning Group
4630 Brand Way
Sacramento, California 95819

Preliminary Geotechnical Engineering and Geologic Hazards Report

HOLLY SUGAR SPORTS PARK

Tracy, California

TABLE OF CONTENTS

INTRODUCTION 1
- Work Scope 1
- Figures and Attachments 2
- Project Description 2

FINDINGS 2
- Site Description 2
- Aerial Photographic Review 3
- Preliminary Soil Description 3
- Groundwater Conditions 4
- Geology 4
- Geologic Structure 5
- Faults and Seismicity 5
- Historic Seismicity 7

CONCLUSIONS 7
- General 7
- Expansive Soils 8
- Fill Material Suitability 8
- Excavation Conditions 8
- Pavement Subgrade Quality 8
- Seismic Code Parameters 9
- Groundwater Conditions and Seasonal Moisture 10
- Preliminary Soil Corrosion Potential 10
- Preliminary Erosion Potential 10
- Seismic Hazards 10
- Seismic Settlement 11
- Volcanic Hazards 11
- Flood Hazards 11
- Landslides 11

PRELIMINARY RECOMMENDATIONS 12
- General 12
- Foundation Design and Floor Slab Support 12
- Pavement Design 12
- Future Studies 13

LIMITATIONS 14

Wallace Kuhl
& ASSOCIATES INC

CORPORATE OFFICE
3251 Beacon Boulevard, Suite 300
West Sacramento, CA 95691
916.372.1434 phone
916.372.2565 fax

ROCKLIN OFFICE
500 Menlo Drive, Suite 100
Rocklin, CA 95765
916.435.9722 phone
916.435.9822 fax

STOCKTON OFFICE
3410 West Hammer Lane, Suite F
Stockton, CA 95219
209.234.7722 phone
209.234.7727 fax

Preliminary Geotechnical Engineering and Geologic Hazards Report
HOLLY SUGAR SPORTS PARK
Tracy, California
WKA No. 8404.02
February 27, 2009

INTRODUCTION

As authorized, we have completed a preliminary geotechnical engineering and geologic hazards investigation for the proposed Holly Sugar Sports Park in Tracy, California. The purposes of our work have been to review information on the nature, distribution and general engineering characteristics of the soils at the site, and to present our findings and conclusions with emphasis upon the soil-related aspects of development of the subject property. We also have reviewed information regarding site geologic and groundwater conditions, and included our findings and conclusions pertaining to geologic hazards at the site. It is emphasized that the findings and conclusions contained in this report are preliminary in nature and are not intended for use in specific design of structural improvements.

Our office has prepared a Phase I Environmental Site Assessment for the subject site as a separate report (WKA No. 8404.01).

Work Scope

Our scope of work for this project included the following tasks:

1. site reconnaissance including collection of bulk surface soil samples;
2. review of historic USGS topographic maps; geologic and fault maps; Soil Conservation Service (SCS) soil survey maps; and, aerial photographs of the property;
3. laboratory testing of soil samples; and,
4. preparation of this report.

Figures and Attachments

The following Figures are included with this report:

Figure	Title	Figure	Title
1	Vicinity Map	6	Epicenter Map
2	Topographic Map	7	Flood Hazard Map
3	Soils Map	8	Expansion Index Test Results
4	Geologic Map	9	R-Value Test Results
5	Fault Map		

Project Description

We understand improvements to the site are associated with the construction of a sports park. The 298-acre site will include an active sports park of approximately 166 acres; 86 acres for a passive recreational area to be used for such activities as walking, biking, disc golf, or an arboretum; and, 46 acres for future expansion. Specific improvements to the remainder of the site includes construction of up to 16 soccer fields, 18 baseball fields, five softball fields, four football fields, one football/soccer stadium, three play areas, several restroom structures, concession facilities, bleachers and parking areas. The football/soccer stadium will include stadium lighting, a public address system, and synthetic turf. The remainder of the play fields will be natural grass turf.

FINDINGS

Site Description

The site is located approximately 500 feet north of West Larch Road, between South Corral Hollow Road and South Tracy Road, just north of and outside the City of Tracy corporate boundary in San Joaquin County, California (Figure 1). The site is comprised of the southern approximately 275 acres of San Joaquin County Assessor's Parcel Number (APN) 212-150-01.

We performed a site reconnaissance on January 29, 2009. On the date of the site reconnaissance the site was observed to be fallow and/or contain an agricultural crop(s). Several irrigation canals traversed the site that divided the site into six, approximate equal sized, rectangular-shaped fields. Several of the irrigation ditches were lined with concrete, while most of them were unlined. Two parallel irrigation ditches were located along the southern boundary of the site. Additionally, several unimproved access roads were observed parallel to some of the irrigation ditches. Several groundwater monitoring wells were observed near the southern boundary of the site during our site reconnaissance.

Based upon the USGS *Topographic Map of the Union Island Quadrangle*, 1978, the ground surface elevation across the site is approximately +5 feet relative to mean sea level (msl). A topographic map is included as Figure2. The center of the site is located at approximate latitude 37.7703ºN and longitude 121.4453ºW.

Aerial Photographic Review

We reviewed available aerial photographs dated 1963, 1975, 1987, and 1989. Based on these photographs the subject property appears to have supported agricultural crops since 1963. Unimproved access roads and agricultural ditches are apparent in all the photographs. The 1963 and 1987 photographs suggest that flood irrigation was used to irrigate the crops.

Preliminary Soil Description

Review of the May 1988 U.S. Department of Agriculture, Soil Conservation Service (SCS) *Soil Survey of San Joaquin County, California,* indicates the near-surface soils on the subject property include the Pescadero clay loam, partially drained, 0 to 2 percent slopes; and, Willows clay, partially drained, 0 to 2 percent slopes. See Figure 3 for the approximate distribution of these soils with respect to the subject site.

The following is a summary of the soil description characteristics as described by the U.S. Department of Agriculture, SCS *Soil Survey of San Joaquin County, California*:

- The Pescadero clay loam typically consists of a surface layer of grayish brown clay loam about 10 inches thick. The subsoil is gray, mottled silty clay about 32 inches

thick. The substratum is gray, mottled silty clay loam to a depth of 60 inches. Permeability is very slow.

- The Willows clay typically consists of a surface layer of gray clay about 20 inches thick. The subsoil is grayish brown, mottled clay to a depth of 60 inches. Permeability is very slow.

Groundwater Conditions

We reviewed groundwater elevation data obtained from a California Department of Water Resources (DWR) monitored well as identified as #02S05E08B001M. This well is reported by DWR to be located approximately 1800 feet north of the subject property. Surface elevation at the well is indicated to be about +4 feet msl. DWR has periodically measured water elevations in this well from March 11, 1960 to at least February 25, 2008. Based on the available data, the lowest measured groundwater elevation in the well occurred on several dates in 1962, 1983, and 1987, at an elevation of approximately –6.7 feet msl (or 10.7 feet below existing grade at the well); the highest elevation of +2.8 feet msl occurred on March 5, 1962 (1.2 feet below existing grade at the well). The most recent measurement on February 25, 2008, indicates water at an elevation of about –4.7 feet msl, or 8.7 feet below existing grade at the well.

Geology

The Holly Sugar Sports Park site is located on the west side of the San Joaquin Valley within the Great Valley geomorphic province of California. The Great Valley geomorphic province is typified by thick sequences of sedimentary materials deposited in an elongate trough located between the Sierra Nevada and Coast Ranges geomorphic provinces.

The Geologic Map of the San Francisco-San Jose Quadrangle (California Department of Conservation, Division of Mines and Geology, Regional Geologic Map Series Map No. 5A, 1991) indicates two Holocene geologic units underlie the site. Flood basin deposits of the Dos Palos Alluvium geologic unit underlie the northern portion of the site, and alluvial fan deposits consisting of gravel, sand, silt and clay underlie the southern portion of the site. A geologic map is presented as Figure 4.

Geologic Structure

The Great Valley of California is considered to be an elongated sedimentary trough, about 450 miles long and 50 miles wide, which has been filled by a thick sequence of Jurassic to Holocene continental and marine sediments. The sediments have been folded into an asymmetric syncline, the axis of which lies immediately east of the interior Coast Ranges (Bailey, 1966).

The Cenozoic deposits along the west side of the San Joaquin Valley are underlain by sedimentary and metamorphic rocks of the Coast Ranges geomorphic province. Near the Tracy area, these rocks typically consist of Cretaceous marine sandstone and shale, and a diverse assemblage of eugeosynclinal rocks of the Franciscan Complex that have been deformed into complex structures with numerous faults.

Faults and Seismicity

No faults are shown as crossing the site in the Safety Element of the City of Tracy General Plan or on the available geologic and fault maps we reviewed, and the site is not located within a designated Alquist-Priolo Earthquake Fault Zone (Bryant and Hart, 2007). As shown on the *Fault Activity Map of California and Adjacent Areas* (Jennings, 1994), the nearest fault to the subject site is the Stockton fault located within one mile of the site to the west. The Stockton fault does not show evidence of displacement during the past 1.6 million years, and does not meet the definitions of the commonly used fault terms "active" or "potentially active".

The nearest fault with evidence of displacement during the Quaternary (the last 1.6 million years) is the Vernalis fault located about one mile to the northeast. Other Quaternary faults near the site include the Black Butte fault (7 miles south) and the Corral Hollow fault (11 miles southwest). The San Joaquin fault (9 miles to the south) and the Midway fault (7 miles southwest) show evidence of displacement during the late Quaternary (10,000 to 700,000 years ago). These faults could be designated as "potentially active", based on accepted definitions of fault activity.

The nearest "active" fault with displacement during the Holocene (the last 10,000 years) is the Carnegie fault located about 11 miles southwest of the subject site near the southern end of the Corral Hollow fault. Other nearby faults with Holocene displacement include the Greenville fault (13 miles southwest), Marsh Creek fault (16 miles west), Verona fault (22 miles southwest),

Pleasanton fault (26 miles west), Calaveras fault (27 miles west), Hayward fault (31 miles west), and Concord fault (31 miles northwest).

Faults with historic surface displacement (during the last 200 years) include the Greenville fault (1980), the Hayward fault (1886), the Calaveras fault (1861), and the Concord fault, which shows evidence of active fault creep.

The California Geological Survey (CGS) publication *Probabilistic Seismic Hazard Assessment for the State of California* (Petersen, et al, 1996; Cao, et al., 2003) indicates the site is located near several faults that are capable of generating earthquake ground motions. A regional fault map is included as Figure 5. A partial listing of CGS Class A and B fault sources with moment magnitudes (M_w) of 6.5 or greater located near the site is presented in Table 1.

TABLE 1
FAULTS INFLUENTIAL TO HOLLY SUGAR SPORTS PARK

Fault Name	Distance		Seismology Parameters	
	Miles	Kilometers	Maximum Magnitude (M_w)	Fault Type
Great Valley 7	5	8	6.7	r
Greenville (GN)	13	21	6.7	rl-ss
Mount Diablo (MTD)	17	27	6.7	r
Calaveras (CS+CC+CN)	27	43	6.9	rl-ss
Great Valley 5	27	44	6.5	r
Great Valley 8	27	44	6.6	r
Hayward (HS+HN+RC)	31	50	7.3	rl-ss
Concord/GV (CON+GVS)	31	50	6.6	rl-ss

The nearest of these faults is Segment No. 7 of the Great Valley Fault System. The Great Valley Fault System consists of a series of low-angle faults or blind thrusts, the fault surfaces of which do not break the ground surface during sizeable earthquakes (Namson and Davis, 1988; Unruh and Moores, 1992; Wakabayashi and Smith, 1994).

Seismic hazards maps based on the *USGS/CGS Probabilistic Seismic Hazards Assessment Model, 2002 (revised April 2003)* shows the subject site is located within a zone with peak

ground accelerations between 0.3g and 0.4g for ground motions with a 10% probability of being exceeded in 50 years.

Historic Seismicity

Data pertinent to the greatest historical earthquakes affecting the site are contained within the database of the EQSEARCH computer program (Blake, 2000; database updated to June, 2008). The EQSEARCH database was developed by extracting records of events greater than magnitude 4.0 from the CGS *Comprehensive Computerized Earthquake Catalog*, and supplemented by records from the USGS; University of California, Berkeley; the California Institute of Technology; and, the University of Nevada at Reno. A historic earthquake epicenter map is included as Figure 6.

An examination of the tabulated data suggests that the Holly Sugar Sports Park site has experienced ground shaking equivalent to Modified Mercalli Intensity VIII[1]. According to this data, the most intense earthquake ground shaking in the vicinity of the site resulted from the magnitude 8.25 San Francisco earthquake of April 18, 1906, with an epicenter located approximately 58 miles (93 kilometers) west of the site. The closest earthquake to the site is indicated to be a magnitude 4.0 earthquake that occurred on February 15, 1992, with an epicenter located approximately 10 miles (16 kilometers) southwesterly of the site.

CONCLUSIONS

General

Our preliminary site reconnaissance indicates the subject site to be suitable for the planned improvements from a soils and geologic standpoint. Earth materials appear to have no unusual or adverse engineering characteristics that would preclude any of the elements of the proposed

[1] Damage slight in specially designed structures; considerable in ordinary substantial buildings with partial collapse; great in poorly built structures. Panel walls thrown out of frame structures. Fall of chimneys, factory stacks, columns, monuments, and walls. Heavy furniture overturned. Sand and mud ejected in small amounts. Changes in well water. Persons driving automobiles disturbed.

development. When specific improvements are defined, a more in depth field investigation will need to be performed to verify suitability of the site with planned improvements.

Expansive Soils

The surface and near-surface soils at the site are variable and contain significant thicknesses of clays. Laboratory tests of collected surface soils indicate these clays possess a medium expansion potential (see Figure 8) that can develop swelling pressures with increases in soil moisture content. Special preparation during site grading and deepening of foundations, accompanied with presaturation of the soil subgrade prior to floor slab placement and reinforcement of floor slabs, may be recommended to help mitigate the effects of expansive soils.

Future studies should include additional laboratory testing to better define the extent of on-site expansive soils. If on-site soils with high expansion potential are present, volume changes with increasing or decreasing soil moisture content should be taken into consideration during design and construction of planned improvements.

Fill Material Suitability

Based on our preliminary site reconnaissance and limited laboratory testing, the on-site soils are considered suitable for use in engineered fill construction, provided they are free of debris and significant concentrations of organics and are at a workable moisture content. Special recommendations may be required for use of potentially expansive clay soils in engineered fill.

Excavation Conditions

Based on our experience in the area and our limited field reconnaissance, the site likely contains surface and subsurface soils consisting of silty clays underlain by clayey and sandy silts. These soils should be excavatable with conventional excavation equipment typically used in the area.

Pavement Subgrade Quality

Laboratory test results (see Figure 9) indicate the on-site near-surface soils possess a Resistance ("R") value of 8. We recommend an "R" value of 5 be used for pavement design.

Seismic Code Parameters

Section 1613A of the 2007 California Building Code (CBC) references Chapter 11 (*Seismic Design Criteria)* of the American Society of Civil Engineers (ASCE) Standard 7-05 for the purposes of seismic design. ASCE 7-05 seismic design uses the Maximum Considered Earthquake (MCE) ground motion for most design not requiring site-specific response analysis. Section 11.4 in Chapter 11 of ASCE 7-05 requires the determination of parameters S_S and S_1, the 0.2 second and 1.0 second spectral response accelerations, for code site class B as determined by maps prepared by the United States Geological Survey (USGS) presented in ASCE 7-05 Figures 22-3 and 22-4. Alternatively, the site parameters may be determined based on the site latitude and longitude using the public domain computer program (Version 5.0.9) developed by the USGS. In our opinion, the following parameters may be used for seismic design at the project using the 2007 CBC.

TABLE 2
2007 CBC SEISMIC DESIGN PARAMETERS

Design Parameters	ASCE 7-05 Table/Figure	2007 CBC Table/Figure	Factor/Coefficient	Value
Short-Period MCE at 0.2s	Figure 22-3	Figure 1613.5(1)	S_S	1.41g
1.0s Period MCE	Figure 22-4	Figure 1613.5(2)	S_1	0.46g
Site Classification	Table 20.3-1	Table 1613.5.2	D	---
Site Coefficient	Table 11.4-1	Table 1613.5.3(1)	F_a	1.0
Site Coefficient	Table 11.4-2	Table 1613.5.3(2)	F_v	1.5
Adjusted MCE Spectral Response Parameters	Equation 11.4-1	Equation 16-37	S_{MS}	1.41g
	Equation 11.4-2	Equation 16-38	S_{M1}	0.71g
Design Spectral Acceleration Parameters	Equation 11.4-3	Equation 16-39	S_{DS}	0.94g
	Equation 11.4-4	Equation 16-40	S_{D1}	0.47g
Seismic Design Categories	Table 11.6-1	Table 1613.5.6-1	Occupancy I to IV	D
	Table 11.6-2	Table 1613.5.6-2	Occupancy I to IV	D

Latitude: 37.7703° N; Longitude: 121.4453° W taken from near the center of the site

Groundwater Conditions and Seasonal Moisture

Available data indicates the groundwater table fluctuates between an elevation of +2.8 feet msl and –6.7 feet msl, or approximately 2 to 12 feet below the ground surface at the project site, respectively. Excavations reaching depths close to the documented groundwater table may encounter saturated soils and possibly groundwater depending on the time of year construction occurs, and may require dewatering.

Preliminary Soil Corrosion Potential

Review of the U.S. Department of Agriculture, SCS *Soil Survey of San Joaquin County, California,* indicates the risk of corrosion on unprotected steel and concrete, for Pescadero clay loam and Willows clay, is high and low, respectively. Based on this information, corrosion of unprotected buried metal objects should be considered during project design. Ordinary Type I/II Portland cement is anticipated to be suitable for use on this project, assuming minimum concrete cover is maintained over the reinforcement.

Preliminary Erosion Potential

Review of the U.S. Department of Agriculture, SCS *Soil Survey of San Joaquin County, California,* indicates the hazard of water erosion for the Pescadero clay loam and Willows clay is slight.

Seismic Hazards

No known Quaternary faults underlie the Holly Sugar Sports Park site based on the published geologic and fault maps and the City of Tracy General Plan we reviewed, and the site is not located within an Alquist-Priolo Fault Study Zone. Therefore, it is our opinion that ground rupture at the site resulting from seismic activity is unlikely. The site is located within a seismically active area; however, design of the structures in conformance with the appropriate edition of the *California Building Code* should be sufficient to prevent significant damage from ground shaking during seismic events resulting from movement on any of the faults or fault systems described in this report.

Seismic Settlement

The site has relatively high groundwater, is underlain by Holocene alluvial and flood basin deposits, and is located within a seismically active area. These conditions indicate a risk of seismic settlement and liquefaction exist. A site-specific geotechnical investigation should be conducted and an analysis of the potential for liquefaction should be accomplished during future geotechnical studies of the site.

Volcanic Hazards

The subject site is located more than 100 miles from Lassen Peak and the Mono Lake - Long Valley Volcanic areas, and more than 90 miles from the Clear Lake area; therefore, the risk to the site associated with volcanic hazards is very low (Miller, 1989).

Flood Hazards

The Federal Emergency Management Agency (FEMA) *Flood Insurance Rate Map for San Joaquin County (unincorporated areas), California* (Panels 565 and 570 of 925, Community-Panel Numbers 0602990565B and 0602990570B, revision date July 4, 1998) shows the site is located within an area designated as Zone A21 with a Base Flood Elevation of +11 msl. A Flood Hazard Map is included as Figure 7. We also checked the FEMA website for Letters of Map Amendments (LOMA) and Letters of Map Revision (LOMR) through November 2008, and found no additional references to the site.

The *Dam Failure Plan* (December 2003) prepared by the San Joaquin County Office of Emergency Services indicates the subject site is located within the dam inundation zones of both New Melones Dam and San Luis Reservoir.

Landslides

The site is essentially flat with no significant slopes near the property. Therefore, the risk of the site being impacted by landslides is nonexistent. The risk of lateral spreading at the site is considered to low assuming future fill material is placed and compacted as engineered fill in accordance with the recommendations of future geotechnical engineering reports.

PRELIMINARY RECOMMENDATIONS

General

The following recommendations are not intended for specific design or construction of the project improvements. They are intended for planning and cost estimating purposes only. A design level report should be prepared at a later time, which would contain specific recommendations for design and construction of the project.

Foundation Design and Floor Slab Support

Based on known current and past uses of the site and soil characteristics, the soils at the site are capable of supporting proposed improvements associated with a sports park. Proposed one-story structures can likely be supported upon continuous and/or isolated spread foundations extending at least 18 inches below lowest adjacent soil grade for lightly loaded structures. Foundations should be continuous around the perimeter of the buildings to help reduce the potential for moisture migration beneath the structures. A maximum allowable soil pressure on the order of 2500 to 3000 pounds per square foot (psf) for dead load plus live load with a one-third increase for consideration of seismic or wind forces is considered appropriate for preliminary foundation design. Continuous foundations should be reinforced to span local irregularities in the supporting soil.

Interior slab-on-grade concrete floors would be suitable for graded pads or relatively flat natural pads constructed at this site, provided slabs are properly designed and constructed with regard to moisture vapor penetration resistance and the slabs are adequately reinforced. Typical slab reinforcement would consist of chaired No. 4 rebar at a maximum of 18-inch center-to-center spacing or No. 3 rebar at maximum 24-inch center-to-center spacing.

Pavement Design

Based on Resistance ("R") value testing, our experience in the area, and appropriate traffic indices, we have calculated the following preliminary pavement section alternatives. The procedures used for designing the pavement section are in general conformance with the

procedures contained in Chapter 600 of the *Caltrans Highway Design Manual*, dated September 1, 2006. An R-value of five is applicable to pavement subgrades at the site.

PAVEMENT DESIGN ALTERNATIVES R-value = 5			
Traffic Condition	Traffic Traffic Index (TI)	Type B Asphalt Concrete (inches)	Class 2 Aggregate Base (inches)
Hard Court Areas	4.0	2½	8
Parking Stalls and Traffic Lanes for Automobiles	4.5	2½	10
Light Trucks and Automobiles	6.0	2½ 3½*	15 13*
Truck Traffic and Collector	8.0	4 5*	19 18*

* Includes the Caltrans factor of safety applied to the asphalt concrete thickness

The upper six inches of pavement subgrades and aggregate base materials should be compacted to at least 95 percent of the maximum dry density, as defined by the ASTM D1557 test method. We emphasize that the performance of the pavement is critically dependent upon uniform and adequate compaction of the soil subgrade as well as all engineered fill and utility trench backfill within the limits of the pavement.

Future Studies

This report is intended to provide an overview of the suitability of the site for development of a sports park. Prior to development, detailed subsurface investigations of the property, including borings and/or test pits, should be performed along with a more extensive laboratory testing program. Geotechnical reports should be prepared presenting specific conclusions and recommendations for design and construction of the various phases of the project.

LIMITATIONS

Our preliminary recommendations are based upon the information provided regarding the proposed construction, combined with our analysis of site conditions revealed by our limited site reconnaissance and laboratory testing programs. We have used our engineering judgment based upon the information provided and the data generated from our investigation.

We appreciate this opportunity to be of service. Please contact our office if you have any questions regarding our report or the geotechnical aspects of site development

Wallace - Kuhl & Associates, Inc.

Juan M. Gonzalez, EIT
Staff Engineer

Edward J. Uhlir
Senior Engineering Geologist

Todd G. Kamisky
Senior Engineer

REFERENCES

1. American Concrete Institute, 2005, ACI Manual of Concrete Practice Part 3, p 318-53.
2. American Society of Civil Engineers Structural Engineering Institute. (2006) ASCE/SEI 7-05: Minimum Design Loads for Buildings and Other Structures.
3. Bailey, E.H. (ed.), 1966, Geology of Northern California, DMG Bulletin 190, pp 215-252.
4. Blake, T.F., 2000, EQFAULT, A Computer Program for the Deterministic Prediction of Peak Horizontal Acceleration from Digitized California Faults, Windows 95/98 Ver. 3.0.
5. Blake, T.F., 2000, EQSEARCH, A Computer Program for the Estimation of Peak Horizontal Acceleration from California Historical Earthquake Catalogs, Ver. 3.0
6. Bryant W.A. and Hart, E.W., 2007, Fault-Rupture Hazard Zones in California, Alquist-Priolo Earthquake Fault Zoning Act with Index to Earthquake Fault Zones Maps (Interim Revision), California Geological Survey Special Publication 42.
7. California Building Standards Commission, 2007, California Code of Regulations, Title 24, "California Building Code,"
8. California Department of Transportation, Division of Engineering Services, Materials Engineering and Testing Services, Corrosion Technology Branch, 2003, Corrosion Guidelines, Version 1.0.
9. California Department of Transportation, 2006, Highway Design Manual, Chapter 600.
10. California Geological Survey, 1999, Recommended Criteria for Delineating Seismic Hazards Zones in California: California Geological Survey, Special Publication 118, 12p.
11. Cao, T., Bryant, W.A., Rowshandel, B., Branum, D. and Wills, C.J., 2003, The revised 2002 California probabilistic seismic hazard maps: California Geological Survey, 11p.
12. Federal Emergency Management Agency, Map Revision date July 4, 1998, Flood Insurance Rate Map (FIRM), Community-Panel No. 060299 0565B and 060299 0570B, San Joaquin County unincorporated areas, California.
13. Frankel, A.D., Petersen, M.D., Muller, C.S., Haller, K.M., Wheeler, R.L., Leyendecker, E.V., Wesson, R.L., Harmsen, S.C., Cramer, C.H., Perkins, D.M., and Rukstales, K.S., 2002, Documentation for the 2002 Update of the National Seismic Hazard Maps: U.S. Geological Survey, Open-File Report 02-420, 33 p.
14. Geonex - Cartwright Aerial Survey, black and white stereo aerial photographs, various years, scale 1:12,000.
15. Jennings, C.W., 1994, Fault Activity Map of California and Adjacent Areas with Locations and ages of Recent Volcanic Eruptions, DMG, 1:750,000.

16. Miller, D.C., 1989, Potential Hazards from Future Volcanic Eruptions in California, USGS, Bulletin 1847.

17. Namson, J.S., and Davis, T. L., 1988, Seismically active fold and thrust belt in the San Joaquin Valley, central California: Geological Society of America Bulletin, v. 100, p. 257-273.

18. Petersen, M. D. and eight others, 1996, Probabilistic seismic hazard assessment for the State of California: CDMG Open File Report 96-08.

19. San Joaquin County Office of Emergency Services, December 2003, Dam Failure Plan.

20. The City of Tracy, Safety Element, City of Tracy General Plan, July 20, 2006.

21. Toppozada, T., and Branum, D., 2002a, Simplified Fault Activity Map of California, CGS Map Sheet 54.

22. Toppozada, T.R., and Branum, D., 2002b, California earthquakes of M≥5.5 – their history and the areas damaged, *in*, Lee, W.H.K., Hanamori, H., and Jennings, P.C., eds., International Handbook of Earthquake and Engineering Seismology: Academic Press, International Geophysics Series, v. 81A, p. 793-798.

23. Toppozada, T.R., and Branum, D., 2004, California earthquake history: Annals of Geophysics, v. 47, p. 509-522.

24. United States Department of Agriculture, Soil Conservation Service, Soil Survey of San Joaquin County, California.

25. Unruh, J.R., and Moores, E.M., 1992, Quaternary blind thrusting in the southwestern Sacramento Valley, California: Tectonics, v. 11, p. 192-203.

26. USGS, 1978, Union Island Quadrangle, California, 7½-minute series (topographic), 1:24,000.

27. Wagner, D.L., Bortugno, E.J., and McJunkin, R.D., 1990, Geologic Map of the San Francisco-San Jose Quadrangle, California: California Division of Mines and Geology: Regional Geologic Map Series, Map No. 5A, 1:250,000.

28. Wakabayshi, J., and Smith, D.L., 1994, Evaluation of recurrence intervals, characteristic earthquakes, and slip rates associated with thrusting along the Coast Range-Central Valley geomorphic boundary, California: Bulletin of the Seismological Society of America, v. 84, p. 1960-1970.

29. Wills, C. J., Petersen, M., Bryant, W. A., Reichle, M., Saucedo, G. J., Tan, S., Taylor, G., and Treiman, J., 2000, A site-conditions map for California based on geology and shear-wave velocity: Bulletin of the Seismological Society of America, v. 90, p. S187-S208.

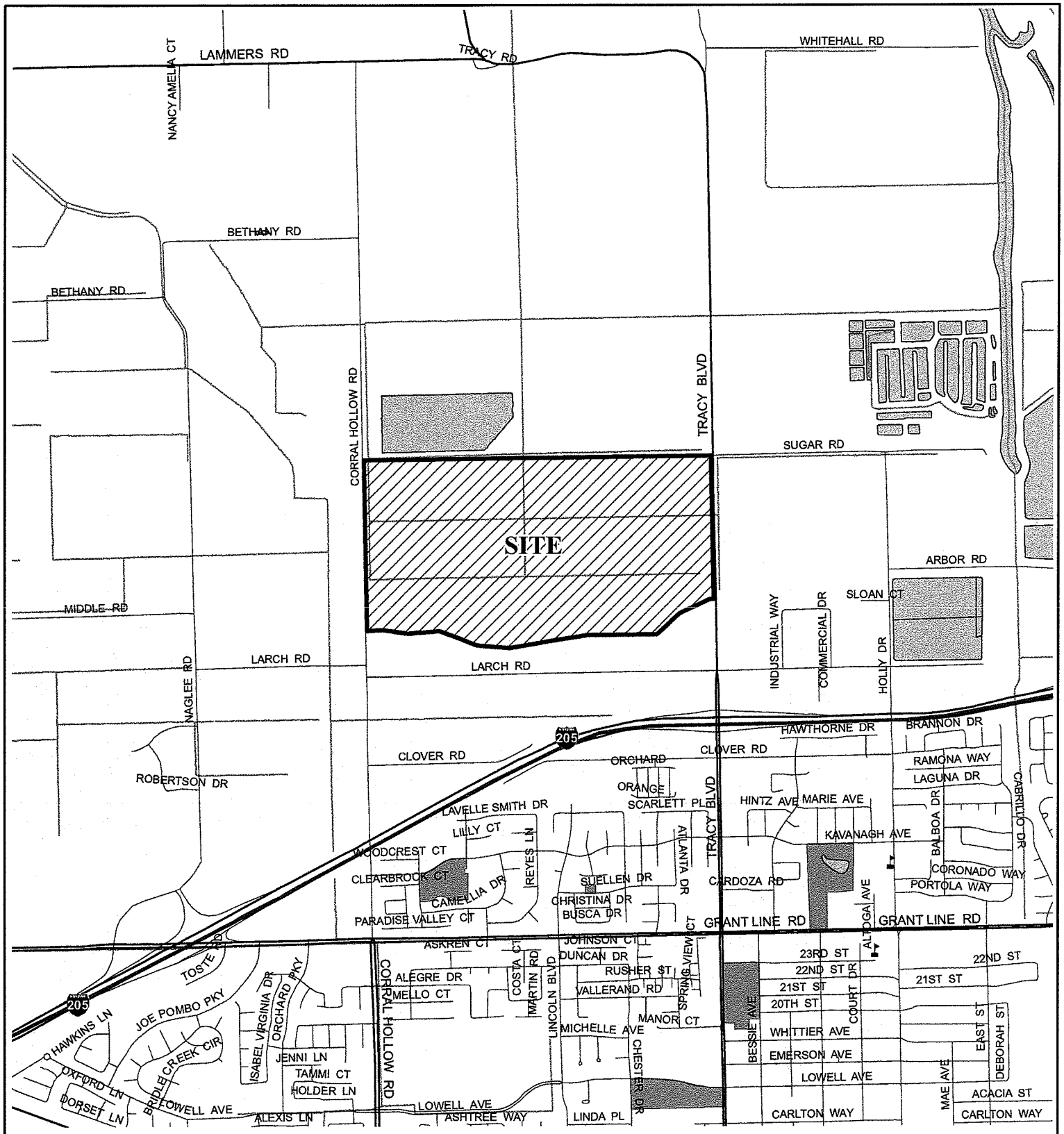

Adapted from data provided by the
Sacramento Area Council of Governments, 2007
Projection: NAD 83, California State Plane, Zone III

Wallace Kuhl & Associates Inc

VICINITY MAP

HOLLY SUGAR SPORTS PARK

Tracy, San Joaquin County, California

FIGURE	1
DRAWN BY	TJC
CHECKED BY	EJU
PROJECT MGR	EJU
DATE	2/09

WKA NO. 8404.02

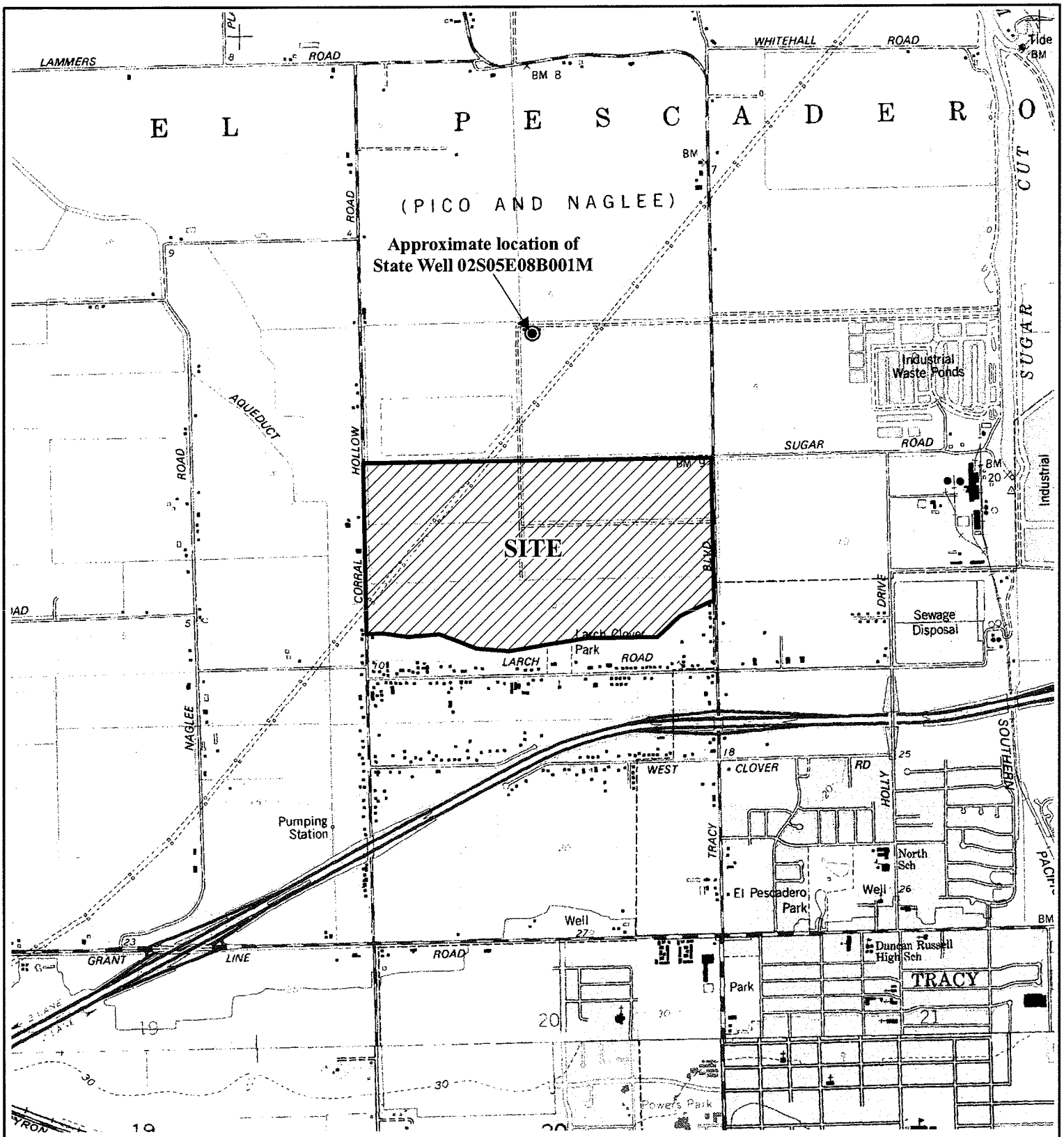

Adapted from U.S. Geological Survey 7.5 minute topographic map of the Union Island quadrangle, California, 1978 acquired from the California Geospatial Information Library, 2007
Projection: NAD 83, California State Plane, Zone III

N

0 1,000 2,000
Feet

WallaceKuhl & Associates Inc

TOPOGRAPHIC MAP

HOLLY SUGAR SPORTS PARK

Tracy, San Joaquin County, California

FIGURE	2
DRAWN BY	TJC
CHECKED BY	EJU
PROJECT MGR	EJU
DATE	2/09

WKA NO. 8404.02

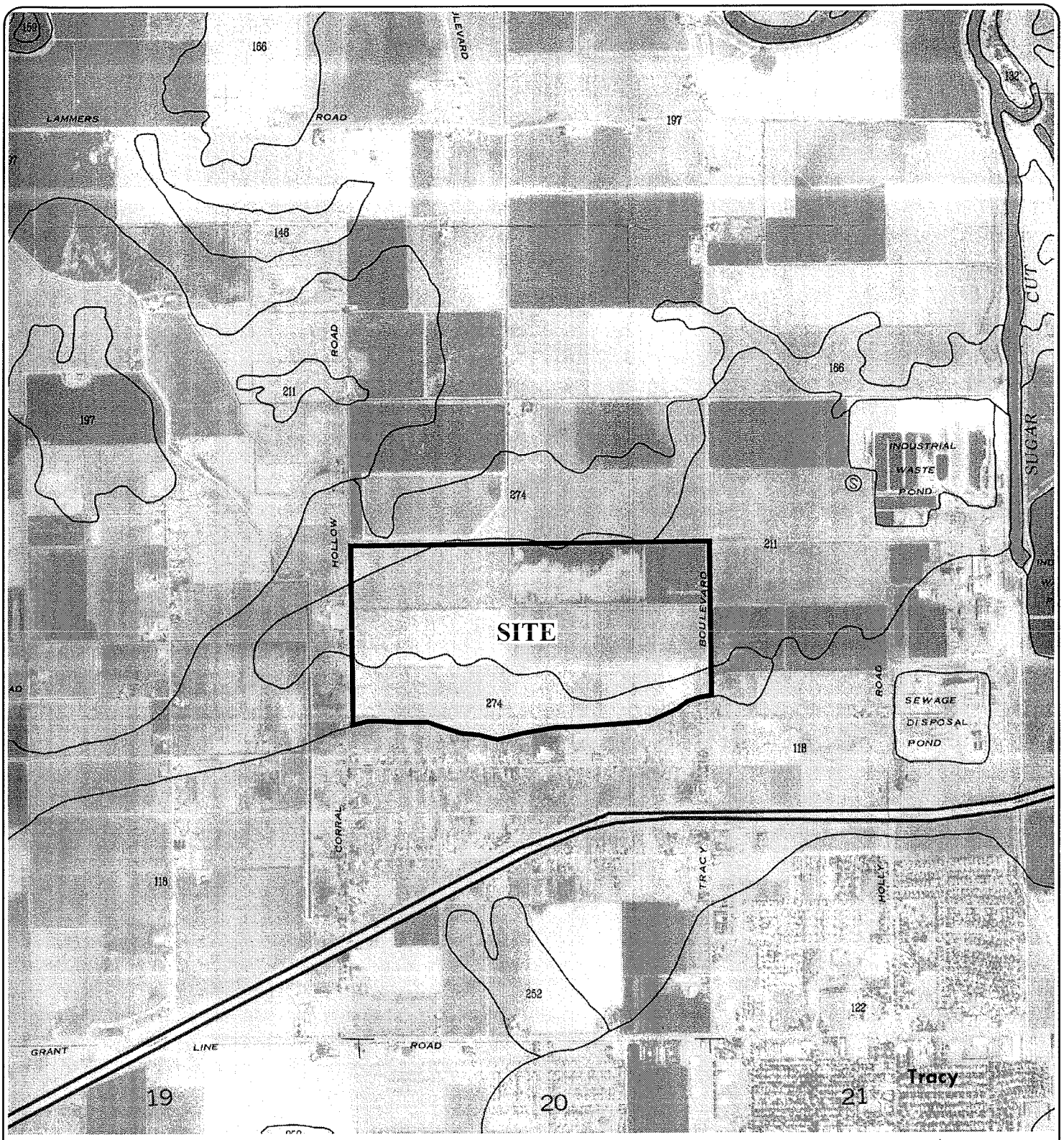

Adapted from the Soil Survey of San Joaquin County, California (Union Island Quadrangle).

Legend:

211 - Pescadero clay loam

274 - Willows clay

N

0 1000 2000

SCALE IN FEET

Wallace Kuhl & Associates Inc

SOIL MAP

HOLLY SUGAR SPORTS PARK

Tracy, San Joaquin County, California

FIGURE 3

DRAWN BY	TJC
CHECKED BY	EJU
PROJECT MGR	EJU
DATE	2 09

WKA NO. 8404.02

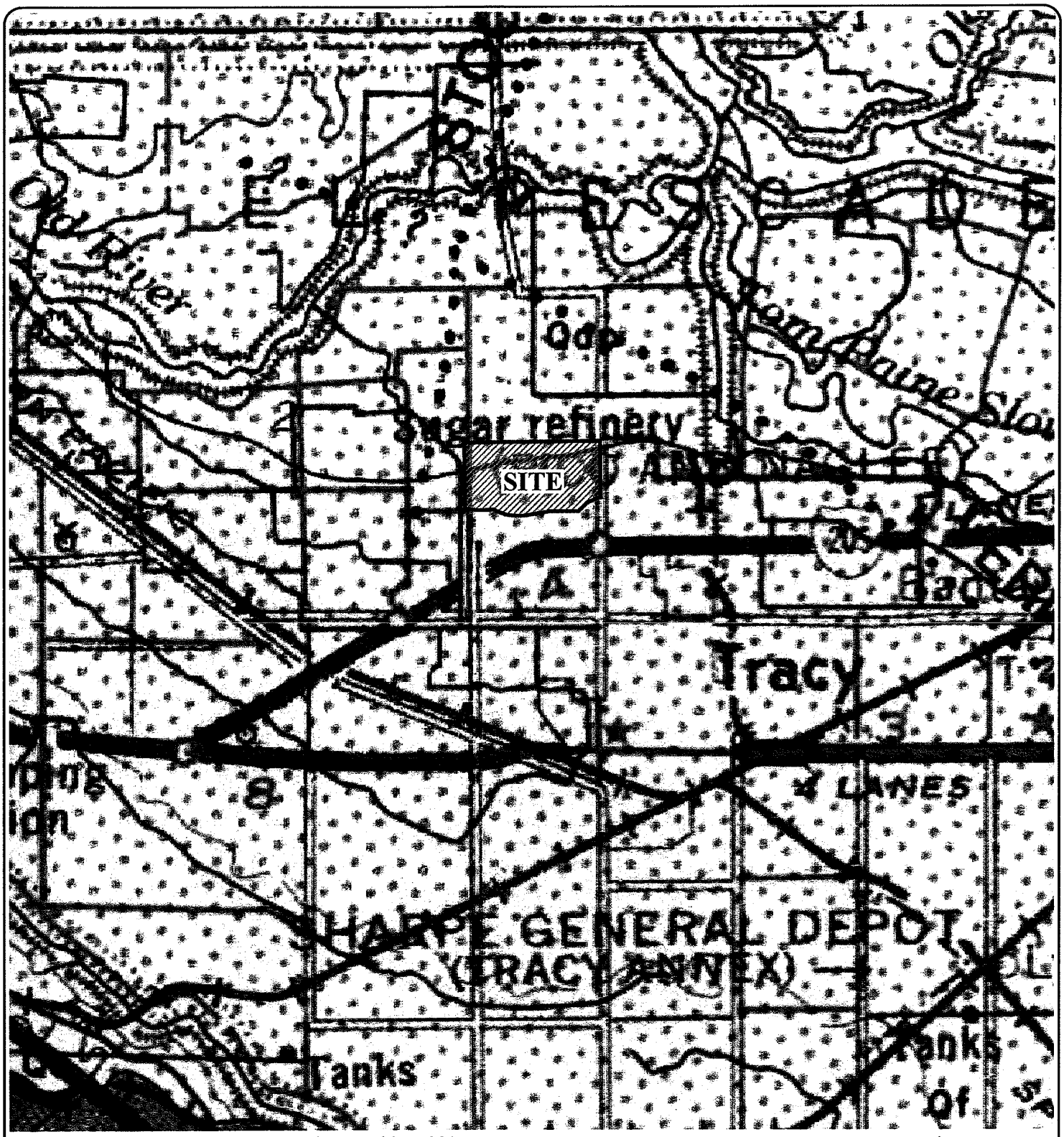

Adapted from Wagner, Bortugno, and McJunkin, 1991.

Qdp - Dos Palos Alluvium (Flood basin deposits)

Qf - Alluvial Fan Deposits (gravel, sand, silt, and clay)

N

0 .5 1.0

SCALE IN MILES

WallaceKuhl & ASSOCIATES INC

GEOLOGIC MAP

HOLLY SUGAR SPORTS PARK

Tracy, San Joaquin County, California

FIGURE 4

DRAWN BY	TJC
CHECKED BY	EJU
PROJECT MGR	EJU
DATE	2/09

WKA NO. 8404.02

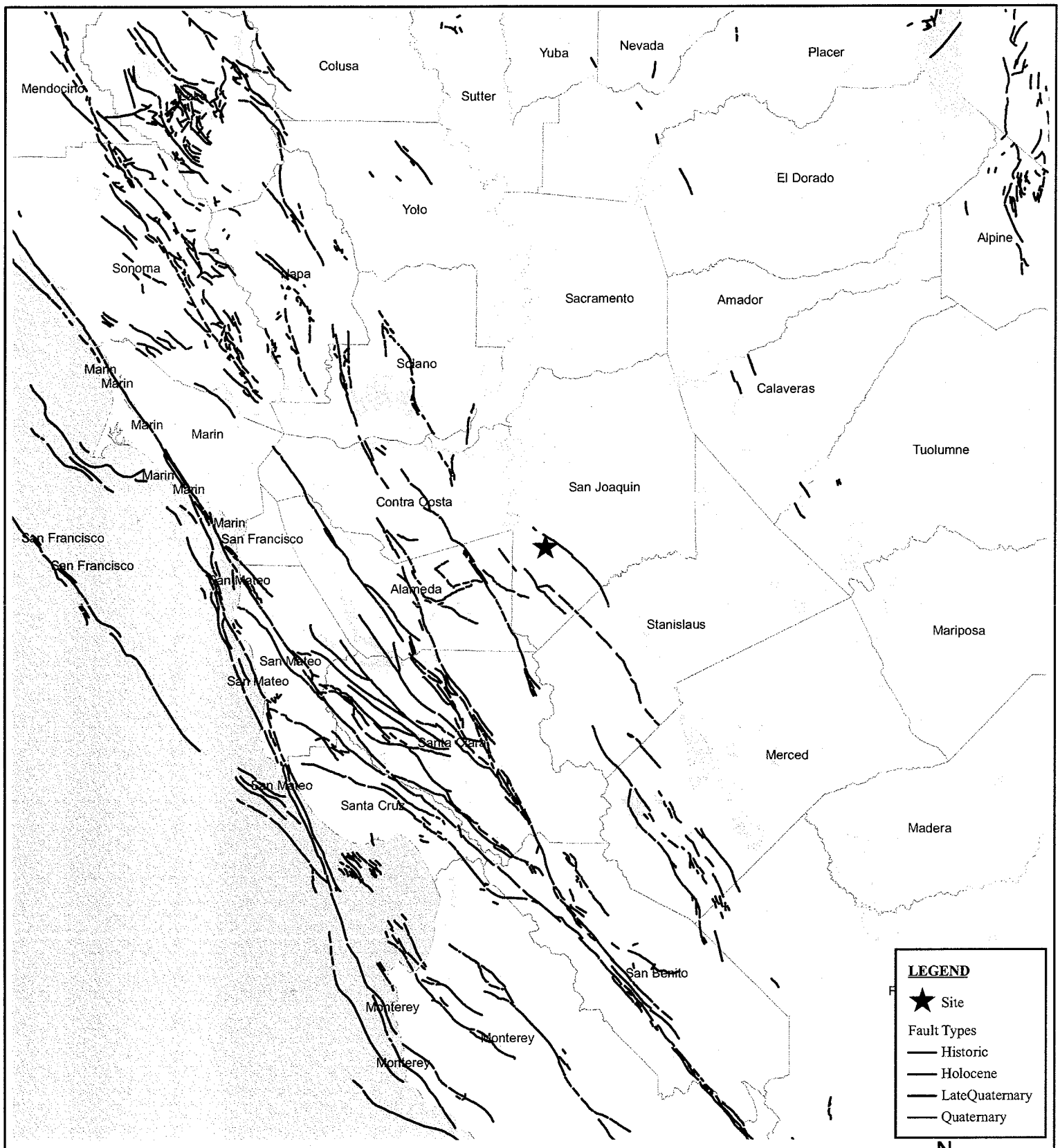

Modified from, Division of Mines and Geology, CD-ROM 2000-08 (2000), Digital database of faults from the Fault Activity Map of California and Adjacent Areas.
Projection: NAD 83, California State Plane, Zone III

Wallace Kuhl & Associates Inc

FAULT MAP

HOLLY SUGAR SPORTS PARK

Tracy, San Joaquin County, California

FIGURE	5
DRAWN BY	TJC
CHECKED BY	EJU
PROJECT MGR	EJU
DATE	2/09

WKA NO. 8404.02

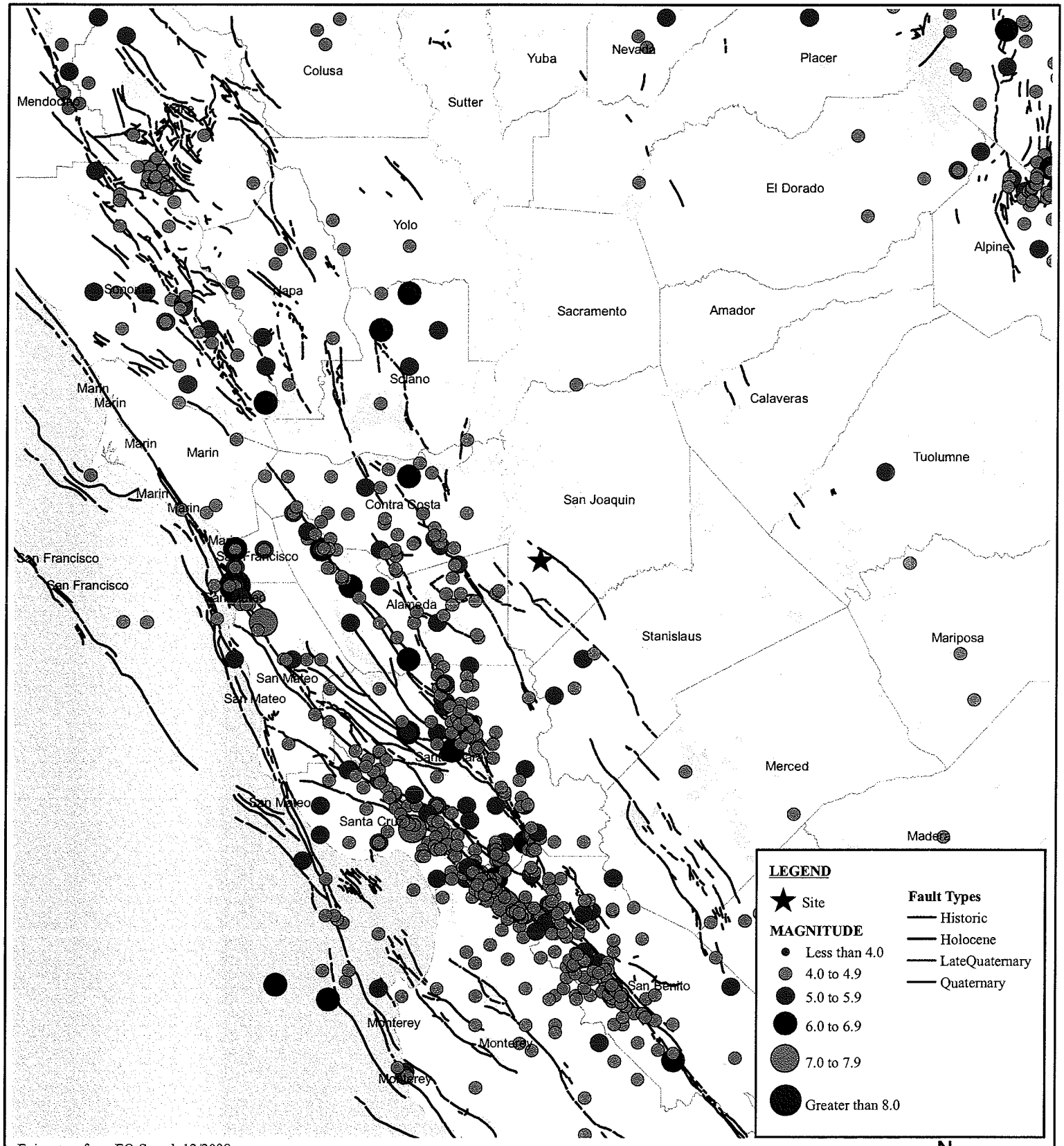

Epicenters from EQ Search 12/2008.
Projection: NAD 83, California State Plane, Zone II

Wallace Kuhl & Associates Inc

EPICENTER MAP

HOLLY SUGAR SPORTS PARK

Tracy, San Joaquin County, California

FIGURE	6
DRAWN BY	TJC
CHECKED BY	EJU
PROJECT MGR	EJU
DATE	2/09

WKA NO. 8404.02

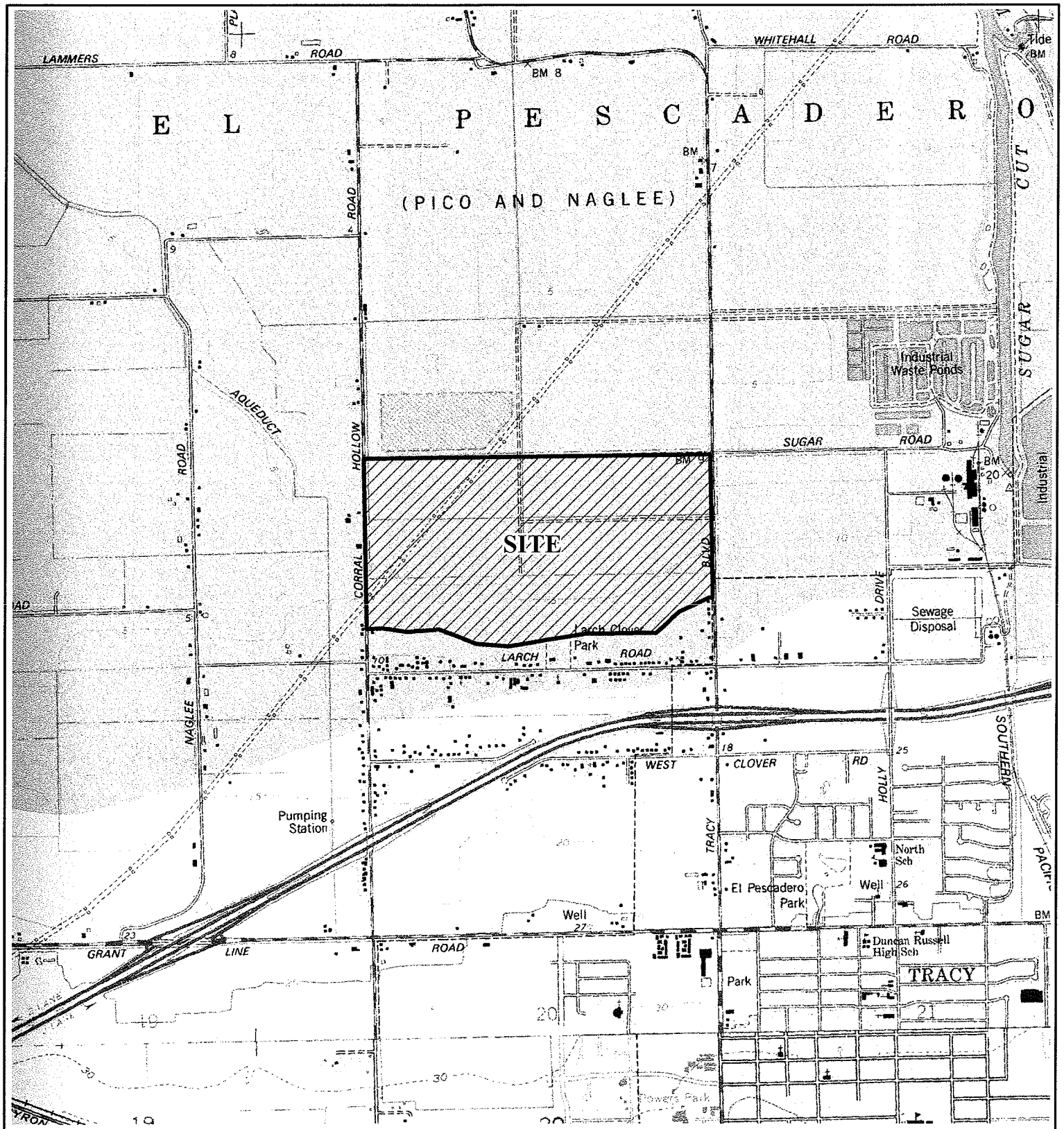

Adapted from the FEMA Quarter 3 dataset of San Joaquin County acquired from the GIS Data Depot, December 2007.
Projection: NAD83, California State Plane, Zone III

Legend

FEMA Flood Zone

A

X

N

0 1,000 2,000

Feet

Wallace Kuhl & Associates, Inc.

FLOOD HAZARD MAP

HOLLY SUGAR SPORTS PARK

Tracy, San Joaquin County, California

FIGURE	7
DRAWN BY	TJC
CHECKED BY	EJU
PROJECT MGR	EJU
DATE	2/09

WKA NO. 8404.02

EXPANSION INDEX TEST RESULTS

UBC Standard No. 18-2

ASTM D4829-03

MATERIAL DESCRIPTION: Brown, slightly sandy, silty clay

Sample Depth	Pre-Test Moisture (%)	Post-Test Moisture (%)	Dry Density (pcf)	Expansion Index *
0'-1'	15.2	31.8	91	**66**

CLASSIFICATION OF EXPANSIVE SOIL **

EXPANSION INDEX	POTENTIAL EXPANSION
0 - 20	Very Low
21 - 50	Low
51 - 90	**Medium**
91 - 130	High
Above 130	Very High

* Corrected to 50% Saturation

** From UBC Table 18-I-B

Wallace Kuhl & ASSOCIATES INC

EXPANSION INDEX TEST RESULTS

HOLLY SUGAR SPORTS PARK

Tracy, San Joaquin County, California

FIGURE 8

DRAWN BY	TJC
CHECKED BY	EJC
PROJECT MGR	EJC
DATE	2/09

WKA NO. 8404.02

RESISTANCE VALUE TEST RESULTS
(California Test 301)

MATERIAL DESCRIPTION: Brown, slightly sandy, silty clay

SAMPLE DEPTH: 0'-1'

Specimen No.	Dry Unit Weight (pcf)	Moisture @ Compaction (%)	Exudation Pressure (psi)	Expansion Pressure (dial)	Expansion Pressure (psf)	R Value
1	107	15.3	254	9	39	5
2	111	13.3	388	19	82	15
3	118	10.9	787	230	996	54

R-Value at 300 psi exudation pressure = 8

WallaceKuhl & ASSOCIATES INC

RESISTANCE VALUE TEST RESULTS

HOLLY SUGAR SPORTS PARK

Tracy, San Joaquin County, California

FIGURE 9

DRAWN BY	TJC
CHECKED BY	EJC
PROJECT MGR	EJC
DATE	2/09

WKA NO. 8404.02

Wallace Kuhl
& ASSOCIATES INC

Phase I Environmental Site Assessment

HOLLY SUGAR SPORTS PARK

Tracy, San Joaquin County, California

WKA No. 8404.01

March 12, 2009

Prepared for:

De Novo Planning Group
4630 Brand Way
Sacramento, California 95819

Prepared By:

Wallace-Kuhl & Associates, Inc.
3251 Beacon Boulevard, Suite 300
West Sacramento, California 95691

Wallace Kuhl
& ASSOCIATES INC

CORPORATE OFFICE
3251 Beacon Boulevard, Suite 300
West Sacramento, CA 95691
916.372.1434 phone
916.372.2565 fax

ROCKLIN OFFICE
500 Menlo Drive, Suite 100
Rocklin, CA 95765
916.435.9722 phone
916.435.9822 fax

STOCKTON OFFICE
3410 West Hammer Lane, Suite F
Stockton, CA 95219
209.234.7722 phone
209.234.7727 fax

Phase I Environmental Site Assessment

HOLLY SUGAR SPORTS PARK

Tracy, San Joaquin County, California

WKA No. 8404.01

March 12, 2009

Wallace-Kuhl & Associates, Inc. (WKA), on behalf of De Novo Planning Group, prepared this Phase I Environmental Site Assessment for the site known as Holly Sugar Sports Park, which is located north of the Tracy City limits, north of Larch Road in San Joaquin County, California. We declare that, to the best of our professional knowledge and belief, the report preparer and reviewer meet the definition of *Environmental Professional* as defined in §312.10 of 40 CFR 312 and have the "specific qualifications based on education, training, and experience to assess a *property* of the nature, history, and setting of the subject *property*. We have developed and performed the all appropriate inquiries in conformance with the standards and practices set forth in 40 CFR Part 312." Resumes of the key staff who prepared this report are included in Appendix A.

WALLACE-KUHL & ASSOCIATES, INC.

Prepared By:

Registered Environmental Assessor I
BENJAMIN McLERNON
REA I - 08137
Expires: 6/09
STATE OF CALIFORNIA

Benjamin McLernon
Senior Staff Environmental Scientist

Reviewed By:

Randy L. Wheeler
Senior Environmental Scientist

Phase I Environmental Site Assessment
HOLLY SUGAR SPORTS PARK

TABLE OF CONTENTS

EXECUTIVE SUMMARY i
1.0 INTRODUCTION 1
1.1 Purpose 1
1.2 Scope of Services 1
1.3 Special Terms and Conditions 2
1.4 User Provided Information 2
2.0 SITE DESCRIPTION 3
2.1 Site and Vicinity General Characteristics 3
2.2 Site Reconnaissance 3
2.2.1 Municipal Infrastructure and Utilities 3
2.3 Adjoining Properties 4
3.0 INTERVIEWS 5
3.1 Owner or Key Site Manager 5
3.2 Occupants (Multi-family or Major) 5
3.3 Past and Present Owners, Operators, and/or Occupants 5
3.4 State and/or Local Government Officials 5
3.5 Abandoned Properties 6
4.0 RECORDS REVIEW 7
4.1 Physical Setting Source(s) 7
4.1.1 Regional and Local Geology 7
4.1.2 Soil Survey 8
4.1.3 Regional and Local Groundwater 9
4.2 Historical Use Information 9
4.2.1 Sanborn® Maps 10
4.2.2 Topographic Maps 10
4.2.3 Oil and Gas Well Maps 11
4.2.4 Aerial Photographs 12
4.2.5 Ownership Records 13
4.2.6 Building Department Records 13
4.2.7 Local Street Directories 13
4.2.8 Zoning and Land Use Records 14
4.2.9 Other Historical Sources 14
4.2.10 Prior Assessments 14

TABLE OF CONTENTS (cont.)

4.3 Environmental Record Sources 14
4.3.1 Site-Related Database Search Results 14
4.3.2 Federal Database Search Results 15
4.3.3 State and County Database Search Results 15
4.3.4 Preliminary Screen For Potential Vapor Intrusion Conditions 16
4.3.5 Environmental Lien Search 17
5.0 CONCLUSIONS AND RECOMMENDATIONS 18
5.1 Data Gaps 18
5.2 Conclusions 18
5.3 Recommendations 19
5.4 Exceptions and/or Deletions 19
5.5 Additional Services 19
6.0 LIMITATIONS 20
7.0 REFERENCES 21

FIGURES

1 Vicinity Map
2 Topographic Map
3 Parcel Map
4 Color Photographs

TABLES

1 Agency Database Search Summary

APPENDICES

A Resumes
B ASTM E 1527-05 User Questionnaire
C Pesticide Use Reports for the site
D EDR® Radius Map Report Executive Summary
E Preliminary Screen For Potential Vapor Intrusion Conditions Matrix
F EDR® Environmental Lien Search Report

Attached CD contains: EDR® Reports: (Radius Map Report, Aerial Photographic Decade Package, Historical Topographic Maps, Sanborn Map Search, City Directory Abstract), and Phase I ESA, Holly Sugar Sports Park (WKA No. 8404.01, dated March 9, 2009).

EXECUTIVE SUMMARY

The proposed Holly Sugar Sports Park (herein referred to as site) is located approximately 500 feet north of West Larch Road, between South Corral Hollow Road and South Tracy Road, just north of and outside the City of Tracy corporate boundary in San Joaquin County, California (Figures 1 and 2). The site is comprised of the southern approximate 298 acres of San Joaquin County Assessor's Parcel Number (APN) 212-150-01 (Figure 3). Surrounding land use consists of rural residential and agricultural land. The following presents a list of observations and findings identified during the preparation of this report:

- The site was a portion of a larger land area developed for agricultural use by at least the 1950s.
- The site was part of a larger land area that was irrigated with washwater (also referred to as wastewater) from the Spreckels Sugar facility located east of the site.
- The Spreckels facility was regulated under Waste Discharge Requirements (WDRs) Order Nos. 5-00-060 and R-5-20003-0050.
- Groundwater monitoring wells on-site are/were used to characterize background groundwater quality beneath the site, as required under the Spreckels WDRs.
- The site itself and the on-site wells are reported to be upgradient from the Spreckels facility.
- Documentation from groundwater analysis conducted in 2000 by West Yost and Associates indicated high levels of sodium sulfate and overall salinity in groundwater along the southern portion of the site.
- The CRWQCB started in 2003: "available data indicates that current wastewater quality is similar to background groundwater quality for most constituents. Exceptions are biochemical oxygen demand (BOD), and total organic carbon (TOC). These constituents do not pose a significant threat to water quality if the wastewater is applied to land at the proposed rate under an effluent limitation. This order places an effluent (TFDS) limitation on wastewater applied to land based on average concentration found in background groundwater." Therefore the application of waste/washwater from the

Spreckels facility to the site, for irrigation purposes, does not appear to have adversely impacted the site.

- Given the documentation reviewed concerning the neighboring agency listed facilities, it appears that none of the facilities have adversely impacted the site.
- Based on the completion of the pVIC-screening matrix, WKA concludes it is presumed *unlikely* that a pVIC currently exists beneath the site.

WKA recommends the following:

- Given the long-term agricultural use of the site and the proposed land use, it may be prudent to sample and test the site soils for possible persistent pesticide residuals.
- If the groundwater monitoring wells on the site will no longer be used, they should be properly abandoned in accordance with San Joaquin County guidelines.

1.0 INTRODUCTION

1.1 Purpose

The purpose of this Phase I Environmental Site Assessment (ESA) was to evaluate the proposed location of the future Holly Sugar Sports Park (herein referred to as site) for evidence of potential Recognized Environmental Conditions (RECs) resulting from current and/or former site activities. According to the American Society of Testing and Materials (ASTM) Standard E 1527-05 the term REC is defined as "the presence or likely presence of any *hazardous substances* or *petroleum products* on a *property* under conditions that indicate an existing release, a past release, or a *material threat* of a release of any *hazardous substances* or *petroleum products* into structures on the *property* or into the ground, groundwater, or surface water of the *property*" (ASTM, 2005).

According to the ASTM, "this practice is intended to permit a *user* to satisfy one of the requirements to qualify for the *innocent landowner*, *contiguous property owner*, or *bona fide prospective purchaser* limitations on CERCLA [Comprehensive Environmental Response, Compensation and Liability Act] liability (hereinafter, the "*landowner liability protections*," or "*LLPs*"): that is, the practice that constitutes "*all appropriate inquiry* into the previous ownership and uses of the *property* consistent with good commercial or customary practice" as defined at 42 U.S.C. §9601(35)(B)."

1.2 Scope of Services

Wallace-Kuhl & Associates, Inc. (WKA) has completed this ESA for the site shown on Figures 1 through 3. Mr. Ben Ritchie, Principle with De Novo Planning Group authorized this assessment on January 1, 2009. This ESA has been performed in conformance with the ASTM Standard E 1527-05 and the scope and limitations defined in WKA's authorized proposal, 2PR08290, dated August 22, 2008 and revised January 8, 2009. The scope of this assessment included the following:

- Site Reconnaissance
- Interviews
- Records Review
- Report Preparation

1.3 Special Terms and Conditions

De Novo Planning Group authorized WKA to perform a search for recorded Environmental Liens and Activity and Use Limitations (AULs) for the San Joaquin County Assessor Parcel Number (APN) related to the site. Results of that search are included in Section 4.3.5.

1.4 User Provided Information

Mr. Steve Bayley, Deputy Director of Public Works with the City of Tracy, completed an ASTM User Questionnaire regarding the site on February 24, 2009. Discussion regarding his responses is provided in the following section. A copy of the completed questionnaire is included in Appendix B.

In summary, Mr. Bayley was not aware of any records of Environmental Liens or AULs currently recorded against the site. Mr. Bayley stated he has no specialized knowledge or experience related to the site. The City of Tracy currently owns the site. Therefore, the question regarding fair market value was not applicable.

Mr. Bayley stated he was aware of the general site history as agricultural in nature. Mr. Bayley stated that he is not aware of any obvious indicators that point to the presence or likely presence of existing contamination at the site.

2.0 SITE DESCRIPTION

2.1 Site and Vicinity General Characteristics

The site is located approximately 500 feet north of West Larch Road, between South Corral Hollow Road and South Tracy Road, just north of and outside the City of Tracy corporate boundary in San Joaquin County, California (Figures 1 and 2). The site is comprised of the southern approximate 298 acres of San Joaquin County Assessor's Parcel Number (APN) 212-150-01 (Figure 3). Surrounding land use consists of rural residential and agricultural land.

2.2 Site Reconnaissance

A visual site reconnaissance was conducted by WKA on January 29, 2009. On the date of the site reconnaissance the site was observed to be fallow and/or contain an agricultural crop(s). Several irrigation canals traversed the site. The irrigation canals divided the site into six, approximate equal sized, rectangular-shaped fields. Most of the irrigation ditches appeared to be unlined. Two parallel irrigation ditches were located along the southern boundary of the site. These two ditches were also parallel to the southern site boundary. The southern-most ditch was concrete lined. The site contained unimproved access roads that were parallel to the on-site irrigation ditches.

A lift pump was located was located approximately 600 to 700 feet west of South Tracy Boulevard and approximately 700 feet south of the northern site boundary.

Along the southern boundary of the site WKA observed several groundwater-monitoring wells. The steel well casings were marked "Spreckels Sugar-Tracy, Monitoring/Test Well." Spreckels Sugar is further discussed in Section 4.3.

2.2.1 Municipal Infrastructure and Utilities

No municipal or private provisions for potable water are currently known to be located on the site. A City of Tracy water main is located southeast of the site, near Larch Road.

Steel tower-mounted electrical power transmission lines were located on the western portion of the site. The transmission lines traversed the site in a southwest/northeast direction. The transmission lines entered the site approximately 500 feet north of the southwestern corner of the site and exited approximately 1,400 feet east of the northwestern corner of the site. Electrical distribution lines were observed on the eastern portion of the site, which supplied power to the lift pump. Two pole-mounted transformers were located near the lift pump. Both were tagged as non-Polychlorinated biphenyl (PCB).

WKA observed markers indicating a buried pipeline beneath and parallel to the transmission lines. Review of the November 26, 2008 *Holly Sugar Sports Park Notice of Preparation and Initial Study*, prepared by De Novo Planning Group, indicates the transmission lines and buried pipeline are owned by Pacific Gas and Electric Company (PG&E). The PG&E pipeline is indicated to be a 12-inch diameter buried natural gas main (De Novo, 2008).

Provisions for sanitary sewer service are not known to be located on the site. A municipal sewer main is located within the South Tracy Boulevard right-of-way.

Stormwater is likely directed to the surrounding irrigation ditches. No municipal stormdrain inlets were located on the site.

2.3 Adjoining Properties

The site is located within a largely agricultural area north of the City of Tracy. On the date of the site reconnaissance, north of the site was similar-type agricultural land to that of the site. To the south, wire fencing and rural properties bound the site. South Tracy Boulevard bounded the site to the east, beyond which was agricultural land and an industrial area to the southeast. The Spreckels Sugar complex was located approximately 2,600 feet to the east of the site. The site is bounded to the west by South Corral Hollow Road, beyond which are rural residences and agricultural land.

3.0 INTERVIEWS

Interviews with various persons familiar with the site vicinity, including representatives of public agencies, were conducted for the purpose of identifying past and present uses, which may have contributed to RECs on the site. Results of those interviews are discussed in the following sections.

3.1 Owner or Key Site Manager

The City of Tracy was contacted through Mr. Ben Ritchie, with De Novo Planning Group, concerning site history. According to an electronic mail received from Mr. Steve Bayley:

- The City has owned the site since July 2003.
- Corn, winter wheat, and alfalfa have been grown on the site.
- Holly Sugar applied washwater from the sugar refinery, located to the east of the site, to the site for crop irrigation water.

3.2 Occupants (Multi-family or Major)

The site was vacant agricultural land on the date of the site reconnaissance, therefore no occupants were interviewed.

3.3 Past and Present Owners, Operators, and/or Occupants

Contact information for Holly Sugar was not received in time for inclusion in this report.

3.4 State and/or Local Government Officials

WKA contacted the San Joaquin County Environmental Health Department regarding files related to the site and Spreckels Sugar. Results of that inquiry are discussed in Section 4.3.

WKA also contacted the San Joaquin County Agricultural Commissioner's Office (SJCAC) regarding crop history and pesticide use reports for the site. The SJCAC had pesticide use reports for the site dating from December 2004 through November 2008. The pesticide use reports indicate alfalfa and oats were grown on the site during that timeframe. The site is

indicated by the pesticide use reports to have been fallow in 2004. Copies of the use reports as received from the SJCAC are included in Appendix C.

3.5 Abandoned Properties

As referenced in 40 CFR Part 312, in the case of inquiries conducted at "abandoned properties," as defined in §312.23(d), "where there is evidence of potential unauthorized uses of the site or evidence of uncontrolled access to the site, the environmental professional's inquiry must include interviewing one or more (as necessary) owners or occupants of neighboring or nearby properties from which it appears possible to have observed uses of, or releases at, such abandoned properties…" No evidence of potential unauthorized uses, or evidence of uncontrolled access to the site was observed. Therefore, WKA did not interview owners or occupants of neighboring properties.

4.0 RECORDS REVIEW

The purpose of the records review is to obtain and review information concerning the current and historical use of the site and adjoining properties that would help identify the presence of RECs in connection with the site. The records review included review and discussion of the following, as available:

- Physical Setting Source(s)
- Historical Use Information
- Environmental Record Sources

4.1 Physical Setting Source(s)

The site is depicted on the 1987 United States Geological Survey (USGS) 7.5 Minute topographic map of the *Union Island, California Quadrangle* as agricultural land, as evident by irrigation canals mapped on the site. The site is located within Section 8, Township 2 South, Range 5 East, Mount Diablo Base and Meridian, at an elevation of approximately +5 feet relative to mean sea level (msl).

4.1.1 Regional and Local Geology

The site is located in the western edge of the Great Valley geomorphic province of California, a large, elongate, northwest-trending structural trough, generally constrained to the west by the Coast Ranges and to the east by the foothills of the Sierra Nevada Range (Norris and Webb, 1990). The Great Valley consists of two valleys lying end-to-end, with the Sacramento Valley to the north and the San Joaquin Valley to the south.

The Sacramento and San Joaquin Valleys have been filled to their present elevations with thick sequences of sediment derived from both marine and continental sources. The sedimentary deposits range in thickness from relatively thin deposits along the eastern valley edge to more than 25,000 feet in the south central portion of the Great Valley (Norris and Webb, 1990). The sedimentary geologic formations of the Great Valley province vary in age from Jurassic to Quaternary, with the older deposits being primarily marine in origin. Younger sediments are

continentally derived and were typically deposited in lacustrine, fluvial, and alluvial environments with their main source being the Sierra Nevada Range.

The Geologic Map of the San Francisco-San Jose Quadrangle (California Department of Conservation, 1991) indicates two Holocene geologic units underlie the site. Flood basin deposits of the Dos Palos Alluvium geologic unit underlie the northern portion of the site, and alluvial fan deposits consisting of gravel, sand, silt and clay underlie the southern portion of the site.

4.1.2 Soil Survey

On February 2, 2009, WKA accessed the United States Department of Agriculture (USDA), Natural Resources Conservation Service (NRCS) Web Soil Survey (WSS). The WSS "...provides soil data and information produced by the National Cooperative Soil Survey. It is operated by the USDA Natural Resources Conservation Service (NRCS) and provides access to the largest natural resource information system in the world..." (USDA, 2009).

According to the WWS the site soils are comprised of Pescadero clay loam and Willows clay.

The NRCS describes the two soil types as follows:

- The Pescadero series consists of poorly drained silty clays in basins. Slopes are less than 1 percent. The soils formed in alluvium from sedimentary rocks. Elevation ranges from 5 to 100 feet. Annual temperature is 60° F., annual rainfall is 16 to 19 inches, and the frost-free season is about 280 days. Vegetation is saltgrass, pickleweed, and other plants that tolerate salt. Pescadero soils are associated principally with Capay and Willows soils.

  In a typical profile, the surface layer is light-gray silty clay loam about 3 inches thick. The subsoil is gray and mottled light olive-gray and pale-brown silty clay and silty clay loam about 64 inches thick. It is underlain by mottled pale-brown clay loam.

  Pescadero soils are used for irrigated row crops, field crops, and irrigated pasture where reclaimed, and for dryland pasture, wildlife habitat, and recreation (NRCS, 2009).

- The Willows series consists of poorly drained clays in basins. Slopes are less than 1 percent. The soils formed in alluvium from mixed sources. Elevation ranges from sea level to 100 feet above. The annual temperature is about 62° F., annual rainfall is 16 to 20 inches, and the frost-free season is about 280 days. In uncultivated areas the vegetation is annual grasses and forbs. Willows soils are associated principally with Capay and Sacramento soils.

  In a typical profile, the soil is mottled gray and olive-gray clay that extends to a depth of more than 60 inches.

  Willows soils are used for row crops (sugar beets), field crops, pasture, dry farmed grain, wildlife habitat, and recreation (NRCS, 2009).

4.1.3 Regional and Local Groundwater

The site is located within the San Joaquin River Hydrologic Basin, as defined by the California Department of Water Resources (DWR). The closest DWR-monitored well is located approximately 1,800 feet north of the site at a rural residence.

Surface elevation at the well is indicated to be about +4 feet msl. DWR has periodically measured water elevations in this well from March 11, 1960 to at least February 25, 2008. Based on the available data, the lowest measured groundwater elevation in the well occurred on several dates in 1962, 1983, and 1987, at an elevation of approximately –6.7 feet msl (or 10.7 feet below existing grade at the well); the highest elevation of +2.8 feet msl occurred on March 5, 1962 (1.2 feet below existing grade at the well). The most recent measurement on February 25, 2008, indicates water at an elevation of about –4.7 feet msl, or approximately 8.7 feet below existing grade at the well.

4.2 Historical Use Information

Historical information was reviewed to develop a history of the previous uses of the site and surrounding area, in order to evaluate the site and adjoining properties for evidence of RECs. Standard historical sources reviewed during the preparation of this report included the following, as available:

- Sanborn® Maps
- Topographic Maps
- Oil and Gas Well Maps
- Aerial Photographs
- Ownership Records
- Building Department Records
- Local Street Directories
- Zoning and Land Use Records
- Other Historical Sources
- Prior Assessments

Discussion of these historical sources is provided in the following sections.

4.2.1 Sanborn® Maps

Sanborn® Maps with coverage of the site were sought through Environmental Data Resources, Inc. (EDR®). EDR® is a national commercial provider of environmental database information. Sanborn® Maps are detailed drawings of site development, and were typically used by fire insurance companies to determine site fire insurability. According to EDR®, Sanborn® Map coverage of the site is not available (EDR®, 2009a).

4.2.2 Topographic Maps

Historical USGS topographic maps with coverage of the site and outlying land areas were reviewed. Topographic maps of the *Union Island, California Quadrangle* for years 1914, 1952, 1968, and 1978 were available for review (EDR®, 2009b). The maps are discussed individually below by year. Copies of the topographic maps compiled by EDR® with coverage of the site are included on the compact disc (CD) attached to the back cover of this report.

1914
Scale: 1:31,680

The site is mapped as part of a much larger land area that is void of development. Tracy Boulevard (to the east of the site) is mapped but not labeled. Grant Line Road is mapped, but not labeled, approximately one mile south of the site.

1952
Scale: 1:24,000

The site is mapped as part of a larger land area likely containing agriculture, given the canals mapped on the site. PG&E electrical transmission lines are mapped on the site in the location as stated in the Site Reconnaissance (Section 2.2). Corral Hollow Road is mapped to the west of the site and Tracy Boulevard is labeled as "Tracy Road." Spreckels Sugar is mapped east of the site and is labeled as "Sugar Refinery."

1968
Scale: 1:24,000

No changes to the site have been mapped on the 1968 map in relation to the 1952 map reviewed above.

1978
Scale: 1:24,000

No significant changes to the site are mapped. A detention basin is mapped to the north of the site. "Industrial waste ponds" are mapped near Spreckels Sugar, approximately 2,500 and 4,000 feet northeast and east of the site respectively.

4.2.3 Oil and Gas Well Maps

Review of California Department of Conservation, Division of Oil, Gas, and Geothermal Resources (DOGGR) Map *W5-3,* dated April 6, 2003, indicates the site is not located in a designated natural gas field. No DOGGR wells are located on or within at least one mile of the site (DOGGR, 2003).

4.2.4 Aerial Photographs

Historical aerial photographs of the site and general vicinity were compiled by EDR®. Photographs covering the years 1957, 1972, 1982, 1993, 1998, and 2005 were available for review (EDR®, 2009c). The results of the review are discussed below by year. Copies of the aerial photographs provided through EDR® are included on the CD attached to the back cover of this report.

1957
Scale: 1 inch = 555 feet

In the 1957 aerial photograph, the site contains agricultural land. Irrigation canals are visible on the site. The PG&E electrical transmission lines mentioned in Section 2.2 of this report are visible on the western portion of the site. A shadow is visible on the eastern portion of the site in the general location of the lift pump observed on the date of the site reconnaissance (Section 2.2). The object casting the shadow is not identifiable at this scale and resolution. WKA has no reason to conclude that it is something other than the lift pump. The roads to the west and east of the site are visible.

1972
Scale: 1 inch = 600 feet

In the 1972 aerial photograph the site contains agricultural crops. No significant change is visible on the site.

1982
Scale: 1 inch = 690 feet

No significant changes are visible on the site in relation to the 1972 aerial photograph discussed above.

1993
Scale: 1 inch = 666 feet

In the 1987 photograph, the site and surrounding area is relatively unchanged from the 1982 photograph. A detention pond is visible to the north of site.

1998
Scale: 1 inch = 666 feet

In the 1998 photograph, the site remains relatively unchanged from the previous photographs.

2005
Scale: 1 inch = 484 feet

In the 2005 photograph, the site remains relatively unchanged from the previous photographs.

4.2.5 Ownership Records

Available ownership information was reviewed through ParcelQuest®. ParcelQuest® is an on-line distributor of "Assessor-Direct property information throughout the State of California." According to ParcelQuest®, the owner of the site is listed as "TRACY CITY OF" and site use is shown as "COMMERCIAL" (ParcelQuest®, 2009).

4.2.6 Building Department Records

Given the lack of historical or recent development on the site, it was not deemed warranted to inquire about building department records in order for the environmental professional to make a determination regarding RECs on the site.

4.2.7 Local Street Directories

Local street directories with coverage of site vicinity were obtained from EDR®. These documents contain business and residential listings based on street number identifiers. The nearest site address of 19842 South Corral Hollow Road was not listed from 1959 to 1996. The address was first listed in 2000 as residences. Surrounding addresses along South Corral Hollow Road were listed as residences (EDR®, 2009d). A copy of the EDR® City Directory is provided on the CD attached to the back cover of this report.

4.2.8 Zoning and Land Use Records

Zoning information for the site was retrieved from the San Joaquin County General Plan Land Use Map. According to the reviewed map, the site is zoned as Agricultural land.

4.2.9 Other Historical Sources

Review of additional historical sources was not warranted in order for the Environmental Professional to make a determination as to evidence of potential RECs on the site.

4.2.10 Prior Assessments

WKA reviewed the November 26, 2008 *Holly Sugar Sports Park Notice of Preparation and Initial Study*, prepared by De Novo Planning Group. Review of that report indicated a similar site use/history as presented herein.

Additionally, WKA reviewed the September 2008 Phase 1 ESA, *Proposed Youth Sports Complex, Former Holly Sugar Complex Property*, prepared by Wright Environmental Services. Review of that report indicated a similar site use/history and conclusions regarding past uses as presented herein.

4.3 Environmental Record Sources

EDR® was contacted to provide a summary of facilities listed on regulatory agency databases (EDR®, 2009e). Table 1 (attached) is a summary of the researched ASTM required *Standard Environmental Record Sources*, as well as several *Additional Environmental Record Sources*, as defined in Sections 8.2.1 and 8.2.2 of the ASTM Standard. For additional reference, the Executive Summary of the EDR® report is included in Appendix D. A copy of the entire EDR® report is included on the CD attached to the back cover of this report.

4.3.1 Site-Related Database Search Results

The site itself does not appear to be listed on any agency databases. EDR® did map 20500 Holly Drive in the central portion of the site. However, 20500 Holly Drive is located approximately

2,700 feet east of the site. This is the location of Spreckels Sugar (a.k.a. Holly Sugar). Holly Sugar owned the site prior to the City of Tracy acquiring it in 2003.

4.3.2 Federal Database Search Results

Holy Sugar is listed on the Federal Emergency Response Notification System database. Spreckels Sugar is also listed on several State databases and is discussed below.

4.3.3 State and County Database Search Results

Spreckels Sugar is listed on several Regional Water Quality Control Board databases including, but not limited, to the Leaking Underground Storage Tank (*LUST*) database and the Underground Storage Tank (*UST*) database. Given its proximity to the site and the mapping by EDR® as discussed above (Section 4.3.1), WKA preformed an agency file review for Spreckels Sugar with the San Joaquin County Environmental Health Department on February 20, 2009. Additionally, WKA reviewed the 2003 California Regional Water Quality Control Board (CRWQCB) Central Valley Region *Monitoring And Reporting Program - Waste Discharge Requirements (WDRs) No. R5-2003-0050* for Spreckels Sugar. The reviewed files revealed the following:

- Spreckels Sugar is the location of a former sugar beet processing facility. The facility was used to produce sugar from sugar beets from 1917 until December 2000. Holly Sugar owned and operated the facility since 1927.
- After December 2000 the facility was a sugar packaging and distribution facility.
- The facility is located one half mile east of the site.
- In 1990, 500 to 800 gallons of fuel spilled from a 420,000-gallon above ground fuel storage tank (AST).
- Total Petroleum Hydrocarbons (TPH) as fuel oil was reported in groundwater beneath the facility.
- The tank is no longer in operation.
- The site was part of a larger land area that was irrigated with wastewater from the Spreckels Sugar facility.

- The primary wastewater streams were from non-contact cooling, boiler blowdown, cleaning of packaging equipment, and general site cleanup.
- The Spreckels facility was regulated under Waste Discharge Requirements (WDRs) Order No. 5-00-060. However, new WDRs were proposed due to the change in facility operations.
- The groundwater monitoring wells on-site are/were used to characterize background groundwater quality.
- The site and on-site wells are reported to be upgradient from the Spreckels facility
- No documentation was encountered indicating TPH as fuel oil contamination beneath the site.
- Documentation from groundwater analysis conducted in 2000 by West Yost and Associates indicated high levels of sodium sulfate and overall salinity in groundwater along the southern portion of the site.
- The CRWQCB started in 2003: "available data indicates that current wastewater quality is similar to background groundwater quality for most constituents. Exceptions are biochemical oxygen demand (BOD), and total organic carbon (TOC). These constituents do not pose a significant threat to water quality if the wastewater is applied to land at the proposed rate under an effluent limitation. This order places an effluent (TFDS) limitation on wastewater applied to land based on average concentration found in background groundwater."

WKA also reviewed documentation concerning the other State and County Database Search Results indicated by EDR® in the vicinity of the site. None of the files reviewed for those facilities indicated a REC in connection with the site.

4.3.4 Preliminary Screen For Potential Vapor Intrusion Conditions

WKA conducted a preliminary screening for potential vapor intrusion conditions (pVIC) beneath the site using a pVIC-screening matrix[1]. The matrix included performing a *Search Distance Test* to identify if there are any known or suspect contaminated sites surrounding or upgradient of the

[1] The Preliminary Screen for Potential Vapor Intrusion Conditions was based on the guidelines presented in the ASTM *E 2600-08 Standard*

site within specific search radii, a *Chemicals of Concern (COC) Test* (for those known or suspect contaminated sites identified within the *Search Distance Test*) to evaluate whether or not COC are likely to be present, and a *Critical Distance Test* to evaluate whether or not COC in a contaminated plume may be within the critical distance of the site (100 feet for non-petroleum hydrocarbon contaminants, and 30 feet for petroleum hydrocarbon contaminants). The Potential Vapor Intrusion Screening Matrix is included in Appendix E.

Based on the completion of the pVIC-screening matrix, it is presumed *unlikely* that a pVIC currently exists beneath the site.

4.3.5 Environmental Lien Search

An environmental lien search for the site was requested through EDR®. According to EDR® no environmental liens or AULs were found for the site (EDR®, 2008f). The EDR® Environmental Lien Search Report is included in Appendix F.

5.0 CONCLUSIONS AND RECOMMENDATIONS

5.1 Data Gaps

The time intervals between the Standard Historical Sources (i.e., topographic maps, aerial photographs, other historical sources) exceeded the ASTM minimum five-year period. However, the use of the site appears unchanged within the time gaps, and therefore, research of the site use during the time gaps is not required by the ASTM Standard (Refer to *Section 8.3.2.1 – Intervals* of the ASTM E 1527-05 standard).

No significant data gaps were identified during the preparation of this report that affects the ability of the Environmental Professional to identify RECs on the site.

5.2 Conclusions

In summary, the historical land use research dating back to the early 1900s, which included reviews of topographic maps, aerial photography, and other ASTM standard historical sources revealed the was a portion of a larger land area developed for agricultural use by at least the 1950s.

Given the documentation reviewed concerning the neighboring agency listed facilities, it appears that none of the facilities reviewed have adversely impacted the site. Groundwater beneath the southern portion of the site was reported in 2000 to contain high levels of sodium sulfate and overall salinity. Additionally in 2003 the CRWQCB started: "...constituents [reported in groundwater] do not pose a significant threat to water quality if the wastewater is applied to land at the proposed rate under an effluent limitation." Therefore the application of waste/washwater from the Spreckels facility to the site, for irrigation purposes, does not appear to have adversely impacted the site.

Based on the completion of the pVIC-screening matrix, WKA concludes it is presumed *unlikely* that a pVIC currently exists beneath the site.

WKA has performed this ESA in conformance with the scope and limitations of ASTM Standard Practice E 1527-05 for the site known as Holly Sugar Sports Complex. This assessment has revealed no evidence of historical or existing RECs in connection with the site.

Any exceptions to, or deletions from, this practice are described in Section 5.4 of this report. A full copy of this ESA report, in a .pdf format, is included on the attached CD.

5.3 Recommendations

WKA recommends the following:

- Given the long-term agricultural use of the site, it may be prudent to sample and test the site soils for possible persistent pesticide residuals.

- If the monitoring wells on the site will no longer be used, they should be properly abandoned under San Joaquin County guidelines.

5.4 Exceptions and/or Deletions

No exceptions or deletions from the ASTM E 1527-05 standard were made during the performance of this ESA.

5.5 Additional Services

Non-scope considerations, such as assessment for naturally occurring asbestos (NOA), wetlands evaluation, indoor air quality, laboratory testing of the soils and groundwater beneath the site for environmental contaminants (such as agricultural-related pesticides, termiticides, polychlorinated biphenyls [PCBs], or arsenic and lead), and assessments for asbestos containing materials and lead-based paint were not included or requested as part of this ESA. Additionally, this ESA did not include conducting a vapor intrusion assessment in accordance with the ASTM *E 2600-08 Standard Practice for Assessment of Vapor Intrusion Into Structures on Property Involved in Real Estate Transactions*. These additional components can be provided as part of a Phase II assessment, if requested or warranted.

6.0 LIMITATIONS

The statements and conclusions in this report are based upon the scope of work described above and on observations made only on the date of the field reconnaissance, January 29, 2009. Work was performed using a degree of skill consistent with that of competent environmental consulting firms performing similar work in the area. Information regarding the site that is *publicly available* and *practically reviewable,* as described in the ASTM standard, was obtained. Additional research or receipt of information regarding the site that was not disclosed or available to WKA during this assessment may result in revision of the conclusions. The conclusions in this report should be reevaluated if site conditions change. No recommendation is made as to the suitability of the site for any purpose. The results of this assessment do not preclude the possibility that materials currently or in the future defined as hazardous are present on the site, nor do the results of this work guarantee the potability of groundwater beneath the site. This report is applicable only to the investigated site and should not be used for any other property. No warranty is expressed or implied.

This report is viable for one year from the publication date of the report provided the following components are updated within 180 days of the date of purchase or (for transactions not involving an acquisition) the date of the intended transaction:

- Interviews with current owners/occupants and/or in order to identify changes in site conditions or uses since the publication date of this report
- Searches for recorded environmental cleanup liens
- Visual inspection of the site and of adjoining properties with emphasis on changes in conditions or uses since the publication date of this report
- A current review of federal, state, tribal and county databases
- The declaration by the environmental professional responsible for the assessment.

Environmental Site Assessments completed more than one year prior to the date of purchase must be reviewed and updated in order for the *Environmental Site Assessment* to be considered valid per Section 4.6 (*Continued Viability of Environmental Site Assessment*), and Sections 4.7 and 8.4 (*Prior Assessment Usage*) of the ASTM E 1527-05 Standard.

BPM:RLW:lmb
H:/dept7/8404.01 Holly Sugar Sports Complex

7.0 REFERENCES

ASTM International. 2005. American Society for Testing and Materials, ASTM Standard E 1527-05, *Standard Practice for Environmental Site Assessments: Phase I Environmental Site Assessment Process*, 100 Barr Harbor Drive, P.O. Box C700, West Conshohocken, Pennsylvania (November 2005).

ASTM International. 2008. American Society for Testing and Materials, ASTM Standard E 2600-08, *Standard Practice for Assessment of Vapor Intrusion Into Structures on Property Involved in Real Estate Transactions*, 100 Barr Harbor Drive, P.O. Box C700, West Conshohocken, Pennsylvania (March 2008).

California Department of Conservation, Division of Mines and Geology, Regional Geologic Map Series Map No. 5A, 1991.

De Novo Planning Group, 2008, *Holly Sugar Sports Park Notice of Preparation and Initial Study*, November 26, 2008.

Environmental Data Resources, Inc. (EDR®) 2009a. *Certified Sanborn Map Report, Holly Sugar Sports Park, Corral Hollow Road, Tracy, California, Inquiry Number* 2410057.3, Milford, Connecticut, (February 4, 2009).

Environmental Data Resources, Inc. (EDR®) 2009b. *The EDR Topographic Map Report, Holly Sugar Sports Park, Corral Hollow Road, Tracy, California, Inquiry Number* 2410057.4, Milford, Connecticut, (February 4, 2009).

Environmental Data Resources, Inc. (EDR®) 2009c. *The EDR Aerial Photo Decade Package, Holly Sugar Sports Park, Corral Hollow Road, Tracy, California, Inquiry Number* 2410057.5, Milford, Connecticut, (February 4, 2009).

Environmental Data Resources, Inc. (EDR®) 2009d. *The EDR City Directory Abstract, Holly Sugar Sports Park, Corral Hollow Road, Tracy, California, Inquiry Number* 2410057.6, Milford, Connecticut, (February 4, 2009).

Environmental Data Resources, Inc. (EDR®) 2009e. *EDR Radius Map Report with GeoCheck, Holly Sugar Sports Park, Corral Hollow Road, Tracy, California, Inquiry Number* 2410057.4, Milford, Connecticut, (February 4, 2009).

Environmental Data Resources, Inc. (EDR®) 2009f. *EDR Environmental Lien Search, Holly Sugar Sports Park, Corral Hollow Road, Tracy, California, Inquiry Number* 2410057.7, Milford, Connecticut, (February 4, 2009).

Jennings, C.W., et al, State of California Department of Mines and Geology, *Geologic Map of California* [map]. 1:750,000, California Geologic Data Map Series, Map No. 2 (Geology). Capitol Heights, MD: William Heintz Map Corporation, 1991.

Norris, R. M., Webb, R. W., 1990, *Geology of California* Second Edition, John Wiley and Sons, Inc. New York.

State of California, Department of Conservation, Division of Oil, Gas, and Geothermal Resources, 2003, *[Well Locations Map] W5-3,* [map], scale unknown.

United States Department of Agriculture (USDA), Natural Resources Conservation Service (NRCS), *Web Soil Survey,* <http://soils.usda.gov/technical/classification/osd/index.html> (2009).

USGS, 1987, Union Island Quadrangle, California, 7½-minute series (topographic), 1:24,000.

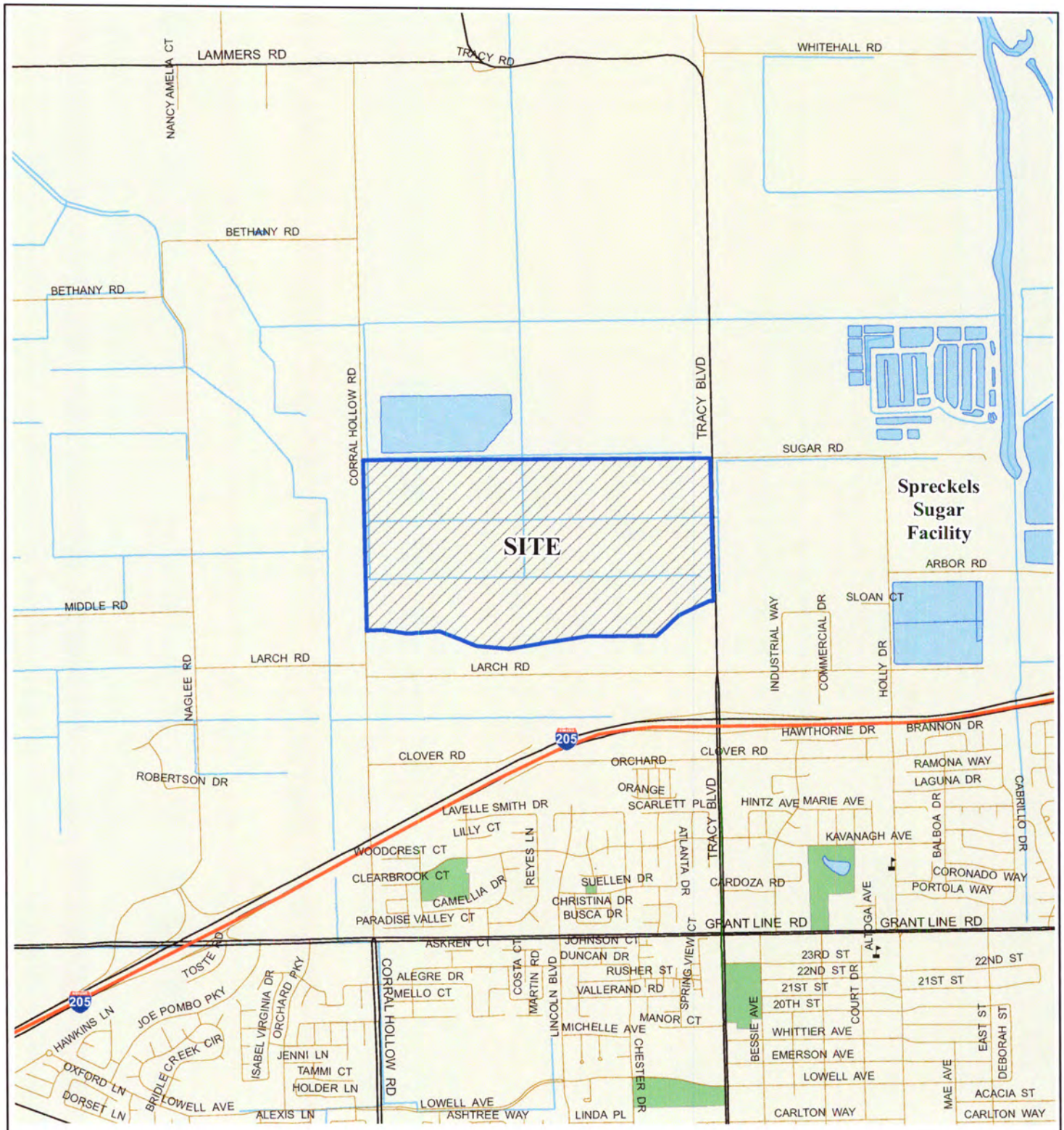

Adapted from data provided by the
Sacramento Area Council of Governments, 2007
Projection: NAD 83, California State Plane, Zone III

N

0 1,000 2,000
Feet

Wallace Kuhl & Associates Inc

VICINITY MAP

HOLLY SUGAR SPORTS PARK

Tracy, San Joaquin County, California

FIGURE	1
DRAWN BY	TJC
CHECKED BY	BPM
PROJECT MGR	BPM
DATE	2/09

WKA NO. 8404.01

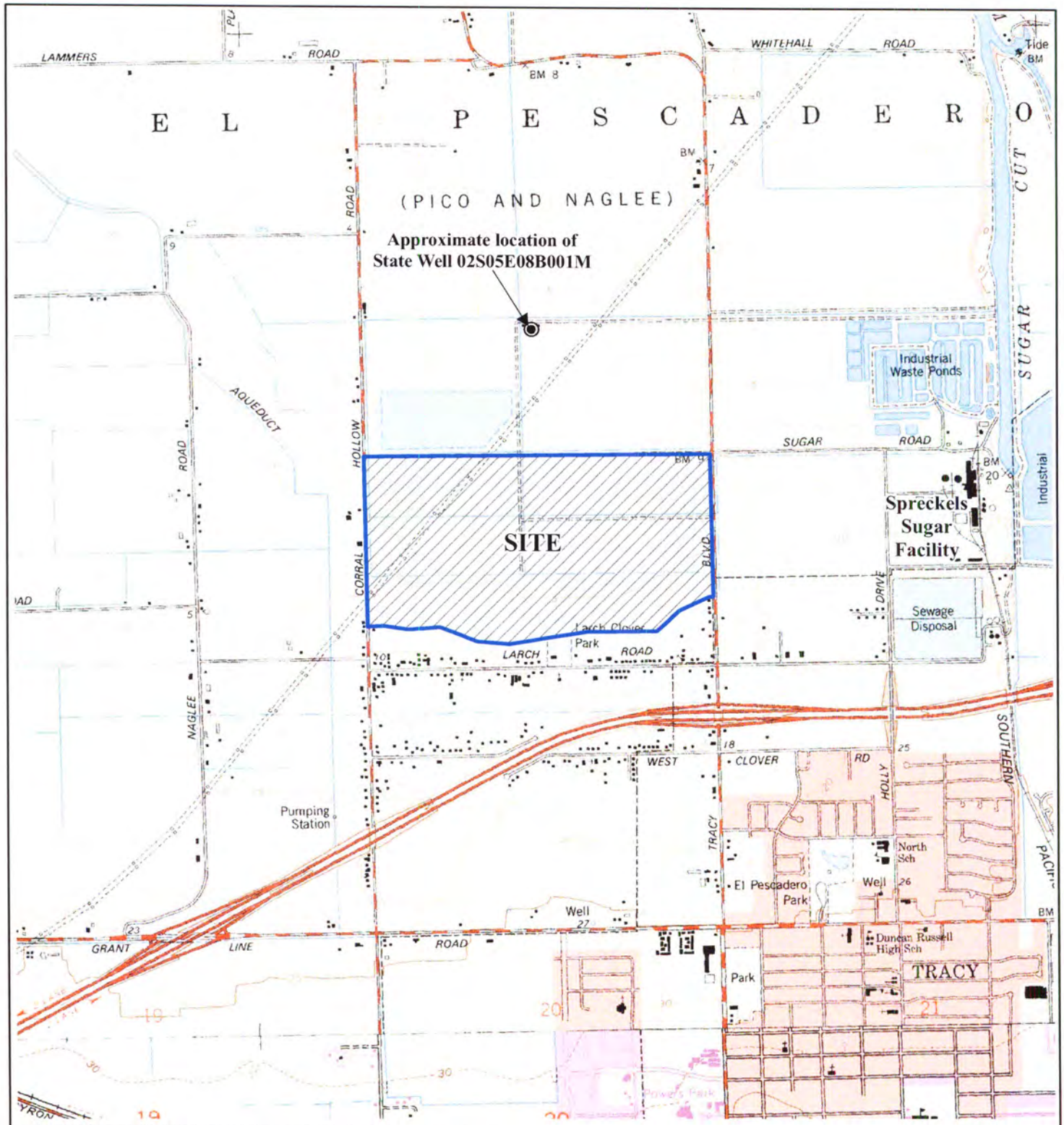

Adapted from U.S. Geological Survey 7.5 minute topographic map of the Union Island quadrangle, California, 1978 acquired from the California Geospatial Information Library, 2007
Projection: NAD 83, California State Plane, Zone III

N

0 1,000 2,000
Feet

Wallace Kuhl & Associates Inc

TOPOGRAPHIC MAP

HOLLY SUGAR SPORTS PARK

Tracy, San Joaquin County, California

FIGURE	2
DRAWN BY	TJC
CHECKED BY	BPM
PROJECT MGR	BPM
DATE	2/09

WKA NO. 8404.01

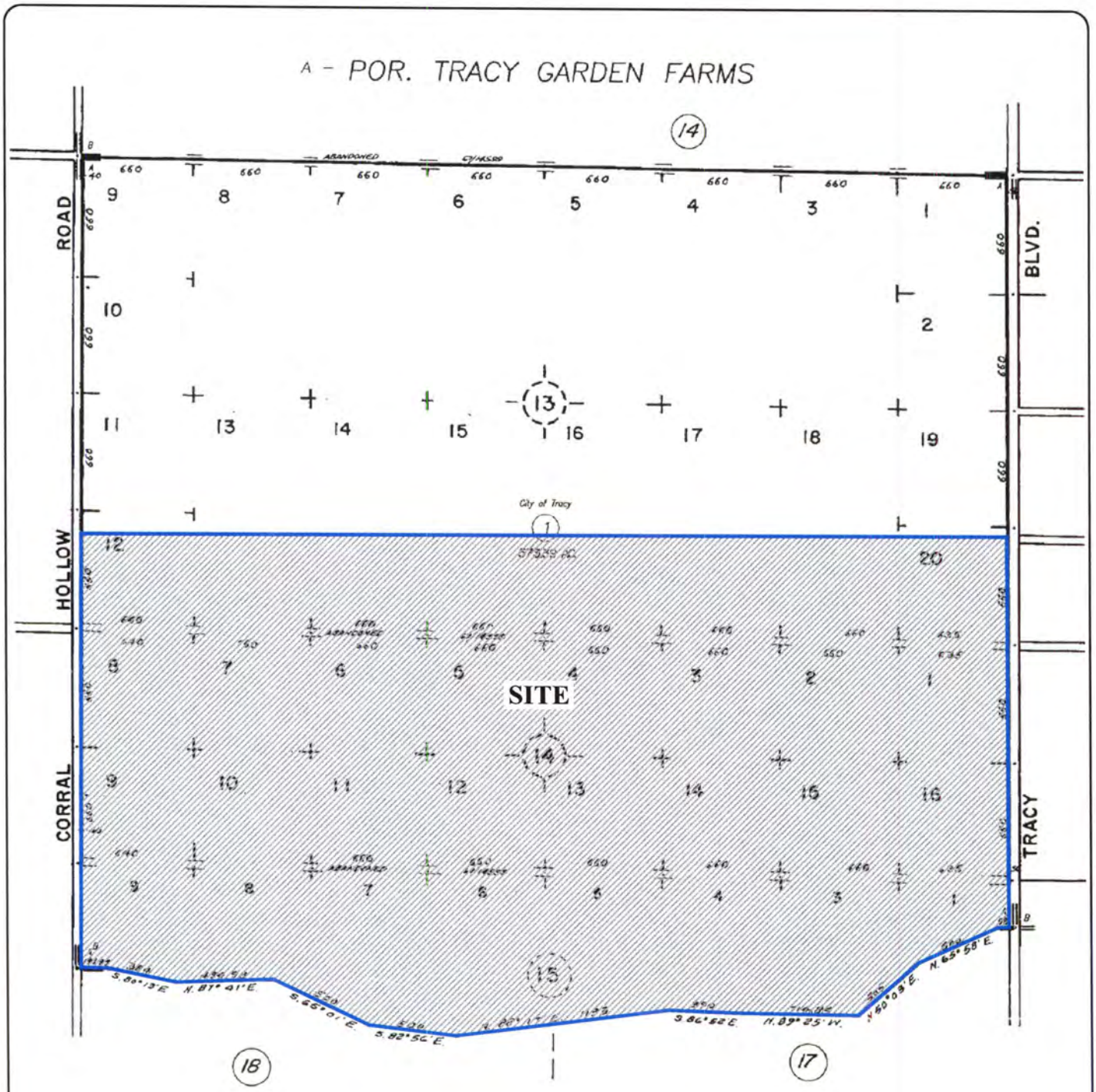

Adapted from the San Joaquin County Assessor's Map Book 212, Page 15.

N

0 400 800

SCALE IN FEET

WallaceKuhl & ASSOCIATES INC

PARCEL MAP

HOLLY SUGAR SPORTS PARK

Tracy, San Joaquin County, California

FIGURE 3	
DRAWN BY	TJC
CHECKED BY	BPM
PROJECT MGR	BPM
DATE	2/09
WKA NO. 8404.01	

View of the site looking west (left side of photo) to north (right side of photo) as seen from near the southeastern corner. Tracy Boulevard is visible on the right (arrow).

View of the site looking north (left side of photo) to south (right side of photo) as seen from near the west-central boundary along Coral Hollow Road. The PG&E electrical transmission lines are visible in the background (arrow).

Typical view of one of several on-site groundwater monitoring wells located on the southern portion of the site. The 55-gallon drum is likely for purge water.

WallaceKuhl
& ASSOCIATES INC

COLOR PHOTOGRAPHS
HOLLY SUGAR SPORTS PARK
Tracy, San Joaquin County, California

FIGURE 4	
DRAWN BY	BPM
CHECKED BY	RLW
PROJECT MGR	BPM
DATE	03/09

WKA NO. 8404.01

View of the on-site lift pump and associated electrical supply and pole-mounted transformers.

View across the site looking west. On the left is a typical irrigation ditch and associated access road.

WallaceKuhl
& ASSOCIATES INC

COLOR PHOTOGRAPHS
HOLLY SUGAR SPORTS PARK
Tracy, San Joaquin County, California

FIGURE 4

DRAWN BY	BPM
CHECKED BY	RLW
PROJECT MGR	BPM
DATE	03/09

WKA NO. 8404.01

TABLE 1

AGENCY DATABASE SEARCH SUMMARY
HOLLY SUGAR SPORTS PARK
WKA No. 8404.01

	EDR Listed Database	*ASTM E 1527-05 Search Distance*	No. of Facilities Listed (within Search Radius)
Federal			
Federal NPL Site List	*NPL*	1-mile	0
Federal Delisted NPL Site List	*Delisted NPL*	1/2-mile	0
Federal CERCLIS List	*CERCLIS*	1/2-mile	0
Federal CERCLIS NFRAP Site List	*CERCLIS NFRAP*	1/2-mile	0
Federal RCRA CORRACTS Facilities List	*CORRACTS*	1-mile	0
Federal RCRA Generators List:	*RCRAInfo*		0
Small Quantity and Large Quantity Generators	*RCRA SQG*	site & adjoining	0
	RCRA LQG		0
Landfills and Solid Waste Management Units	*RCRA TSDF*	1/2-mile	0
Federal Institutional Control / Engineering Control Registries	*US ENG Controls*	site only	0
	US INST Controls		0
Federal ERNS List	*ERNS*	site only	0
State			
State-equivalent NPL (Hist. Cal-Sites)	*Hist. Cal-Sites*	1-mile	0
State-equivalent CERCLIS	*RESPONSE*	1/2-mile	0
State Landfill and/or Solid Waste Disposal Site Lists	*SWF/LF (SWIS)*	1/2-mile	0
	WMUDS/SWAT		0
State Leaking Underground Storage Tanks	*LUST*	1/2-mile	10
Tribal Leaking Underground Storage	*Indian LUST*	1/2-mile	0
State Registered Underground Storage Tanks	*UST*	site & adjoining	0
Tribal Registered Underground Storage Tanks	*Indian UST*	site & adjoining	0
State Registered Aboveground Storage Tanks	*AST*	site & adjoining	0
State Institutional Control Registries [No State-equivalent for Eng. Controls]	*DEED*	site only	0
State Voluntary Cleanup Sites	*VCP*	1/2-mile	0
State Brownfield Sites	*US Brownfields*	1/2-mile	0
Additional Environmental Record Sources			
Hazardous Waste & Substances Sites List	*CORTESE*	1/2-mile	11
DTSC EnviroStor (includes Cal-Sites)	*EnviroStor*	1-mile	0
SLIC	*SLIC*	1/2-mile	4
Cleaner Facilities	*Historical Drycleaners*	1/4-mile	0
HAZNET	*HAZNET*	1/4-mile	0
Local - County			
San Joaquin County		1/2-mile	0

BOLD typeface indicates the site is listed on that particular database.
Names and addresses of identifed facilities are listed in the Executive Summary included in Appendix E.
The full EDR Radius Map Report is included on CD attached to the back cover of this report.
Database search based on EDR Radius Map Report

APPENDIX A

Resumes

BENJAMIN MCLERNON

SENIOR STAFF ENVIRONMENTAL SCIENTIST

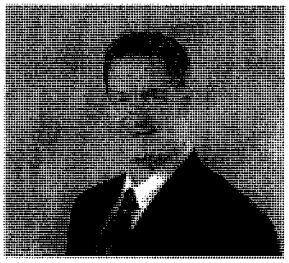

Mr. McLernon has been with Wallace-Kuhl & Associates since May of 2000. During a very short time as the CAD Manager for the drafting department, his dedication and genuine desire to improve productivity dramatically reduced job turnaround time. He also assisted with Environmental Site Assessments (ESAs) and assisted project engineers with soil and core sampling for use in geotechnical reports. Mr. McLernon has brought this job dedication and experience to his current position within the company as a Senior Staff Environmental Scientist. Since 2001, he has completed numerous ESAs in several California Central Valley and Eastern Sierra Nevada counties, including ESAs for proposed school sites. Many of his projects have included Phase 2 assessments for persistent pesticide residuals and petroleum hydrocarbon contamination in soils and/or groundwater. Mr. McLernon's prior field reconnaissance experience in the United States Army lends itself well to the detailed site observations, topographic map interpretations, and aerial photography interpretive skills that are necessary for thorough investigations.

HIGHER EDUCATION:

California State University, Sacramento
Bachelor of Arts, Environmental Studies, Minor in Biology (2006)

EXPERIENCE:

2/07 - Present	Wallace-Kuhl & Associates Sr. Staff Environmental Scientist
2/01 - 2/07	Wallace-Kuhl & Associates Staff Environmental Scientist
5/00 - 2/01	Wallace-Kuhl & Associates CAD Manager
5/97 - 5/00	Kern County Assessor Cadastral Map Drafting Technician

PROFESSIONAL REGISTRATION:

Registered Environmental Assessor I, No. 08137, California

PROFESSIONAL AFFILIATIONS:

Groundwater Resource Association of California

CERTIFICATIONS:

40-Hour HAZWOPER OSHA certification
Medic First Aid® Care Initiator (CPR Inclusive)

RELEVANT PROJECTS:

Van Exel Dairy, Lodi – Domestic and Agricultural Water Sampling
Miller-Auburn Property, Auburn – Phase 1 and Limited Phase 2 Investigation
Mancuso Property, Truckee - Phase 1 Environmental Site Assessment
Crystal Creamery, Sacramento – Phase 1 ESA and Phase 2 Investigation
Natomas Central – Fisherman's Lake, Sacramento – Phase 2 ESA Surface Water Quality Testing
Bradshaw Vineyards, Sacramento – Phase 2 ESA – Agriculture Soils Testing
Gold Rush Ranch, Sutter Creek – Phase 1 ESA and Limited Phase 2 –Mine Tailings

RANDY WHEELER

SENIOR ENVIRONMENTAL SCIENTIST

Mr. Wheeler has been employed in the fields of soil and groundwater investigations since 1988. With our firm since March 2003, Mr. Wheeler has over 21 years of experience conducting Phase I and Phase II site assessments. These projects include a large variety of properties ranging from single-family residential developments to large-scale commercial and industrial facilities.

He has also performed Phase I site assessments for several community-wide projects, including the South Sutter County Specific Plan; the results of which were or will be used to formulate project area specific plans with city and county agencies. Mr. Wheeler has conducted several Brownfields investigations for the City of West Sacramento under the EPA Brownfields Grant program, including the West Capitol Avenue Corridor Study, and the West Capitol West End Community Wide Assessment. His projects have also included Phase I studies of several thousand acres of proposed mitigation lands in addition to performing Phase I and Phase II work on the former Union Pacific Rail yard in West Sacramento.

HIGHER EDUCATION:

California State University, Sacramento
Bachelor of Arts, Geology (1987)

EXPERIENCE:

3/03 – Present	Wallace-Kuhl & Associates, Inc. Senior Environmental Scientist
3/88 – 3/03	Kleinfelder Project Manager

PROFESSIONAL REGISTRATION:

Registered Environmental Assessor I No. 07916; California
Certified Environmental Manager No. 2127, Nevada

PROFESSIONAL AFFILIATIONS:

Groundwater Resources Association

RELEVANT PROJECTS:

Port of Sacramento Collateral Property, West Sacramento
Ironworks at the Triangle Property, West Sacramento
Former Union Pacific Redevelopment Property, Riske Lane, West Sacramento
California Woodfiber Property, West Sacramento
West Capitol Avenue Corridor Study, West Sacramento
South Sutter County Specific Plan, Sutter County

REFERENCES:

Paul Dirksen, City of West Sacramento Redevelopment Agency, 916-617-4555
John Hopkins, Sheldon Oil Company, 707-425-2951
Wendy Hall, Conservation Resources, 916-974-3383
Robert Holmes, Regis Homes of Northern California, 916-929-3193
Jim Kleinfelder, Spectrum Exploration, 209-465-8712

APPENDIX B

ASTM E 1527-05 User Questionnaire

E 1527-05 USER QUESTIONNAIRE
TRACY SPORTS PARK

In order to qualify for one of the *Landowner Liability Protections (LLPs)* offered by the Small Business Liability Relief and Brownfields Revitalization Act of 2001 (the "*Brownfields Amendments*"), the *user*[1] must provide the following information (if available) to the *environmental professional*. Failure to provide this information could result in a determination that "*all appropriate inquiry*" is not complete.

(1.) Have you performed a search for environmental cleanup liens and AULs, as described under *User Obligations* in the attached proposal, for the *property*? No

(2.) Are you aware of any environmental cleanup liens against the *property* that are filed or recorded under federal, tribal, state or local law? No

(3.) Are you aware of any AULs, such as *engineering controls*, land use restrictions or *institutional controls* that are in place at the site and/or have been filed or recorded in a registry under federal, tribal, state or local law? No

(4.) As the *user* of the report, do you have any specialized knowledge or experience related to the *property* or nearby properties? For example, are you involved in the same line of business as the current or former occupants of the property or an adjoining property so that you would have specialized knowledge of the chemicals and processes used by this type of business? No

(5.) Does the purchase price being paid for this *property* reasonably reflect the fair market value of the *property*? If you conclude that there is a difference, have you considered whether the lower purchase price is because contamination is known or believed to be present on the *property*? Not Applicable

(6.) Are you aware of commonly known or reasonably ascertainable information about the *property* that would help the environmental professional to identify conditions indicative of releases or threatened releases? For example, as user,

(a.) Do you know the past uses of the *property*? Yes If so, what were they? agricultural

(b.) What, if any, specific chemicals are present or once were present at the *property*?
Pesticide spraying and fertilizer application

(c.) What, if any, spills or other chemical releases have taken place at the *property*?
None that I'm aware of.

(d.) What, if any, environmental cleanups have taken place at the *property*?
None that I'm aware of.

---

[1] *User*, as defined in the ASTM Standard is "the party seeking to use Practice E 1527 to complete an *environmental site assessment* of the *property*. A *user* may include, without limitation, a potential purchaser of *property*, a potential tenant of *property*, an *owner* of *property*, a lender, or a *property* manager. The *user* has specific obligations for completing a successful application of this practice as outline in Section 6 [of the ASTM Standard]."

E 1527-05 USER QUESTIONNAIRE (cont.)
TRACY SPORTS PARK

(7.) As the *user* of this ESA, based on your knowledge and experience related to the *property* are there any obvious indicators that point to the presence or likely presence of contamination at the *property*? None

COMPLETION:

I have completed this User Questionnaire to the best of my knowledge and provided all information to the environmental professional as of the following date:

Completed by: Steven Bayley Date: 2/24/09

Title: Deputy Director of Public Works

Signature: Steven Bayley

Phone Number: 209-831-4434

Relationship to the Site (i.e., owner, lender, property manager): City employee/ property manager

APPENDIX C

Available Pesticides Use Reports for the site

STATE OF CALIFORNIA

PRODUCTION AGRICULTURE MONTHLY PESTICIDE USE REPORT : MULTIPLE SECTION

PR-ENF-184 (EST. 10/91)

SEE INSTRUCTIONS ON THE REVERSE OF THIS FORM

DEPARTMENT OF PESTICIDE REGULATION
PESTICIDE ENFORCEMENT BRANCH

№ 117972

1. MONTH	2. YEAR	3. COUNTY NO.
December	2004	39

4. COMMODITY / SITE TREATED	5. OPERATOR ID / PERMIT NO.	6. OPERATOR (GROWER)	7. ADDRESS	8. CITY	9. ZIP CODE
Fallow	39-04-3902007	Amando B+B	16505 Tracy Blvd	Tracy	95376

10. SECTION	11. TOWNSHIP	12. RANGE	13. BASE AND MERIDAN	14. SITE IDENTIFICATION NUMBER	15. DATE AND TIME APPLICATION COMPLETED	16. TOTAL PLANTED ACRES	17. TOTAL TREATED ACRES	18. APP. METHOD (CHECK ONE)	19. EPA / CALIF. REG. NO. FROM LABEL	20. TOTAL PRODUCT USED (CIRCLE ONE UNIT OF MEASURE)	21. RATE PER ACRE	22. DILUTION	23. DAYS REENTRY	24. MANUFACTURER / NAME OF PRODUCT
✓8	N 2 S	E 5 W	S M H	2-3 J	0900 12-3-04	62	62	GR ☒ AIR ☐ OTHER ☐	524-445-55467	15½ LB OZ PT QT GA	1 Qt	10 gpa		Tranbos Buccaneer
✓8	N 2 S	E 5 W	S M H	2-4 J	1300 12-3-04	59	59	GR ☒ AIR ☐ OTHER ☐	"	15 LB OZ PT QT GA	"	"		"
✓8	N 2 S	E 5 W	S M H	2-5 J	1600 12-3-04	53	53	GR ☒ AIR ☐ OTHER ☐	"	13½ LB OZ PT QT GA	"	"		"
✓17	N 2 S	E 5 W	S M H	2-6 J	0900 12-4-04	47	47	GR ☒ AIR ☐ OTHER ☐	"	6 LB OZ PT QT GA	"	"		"
✓17	N 2 S	E 5 W	S M H	2-7 J	1200 12-4-04	42	42	GR ☒ AIR ☐ OTHER ☐	"	5 LB OZ PT QT GA	"	"		"
✓8	N 2 S	E 5 W	S M H	2-8 J	1400 12-4-04	42	42	GR ☒ AIR ☐ OTHER ☐	"	5 LB OZ PT QT GA	"	"		"
✓8	N 2 S	E 5 W	S M H	2-9 J	1600 12-4-04	47	47	GR ☒ AIR ☐ OTHER ☐	"	6 LB OZ PT QT GA	"	"		"
	N S	E W	S M H					GR ☐ AIR ☐ OTHER ☐		LB OZ PT QT GA				
	N S	E W	S M H					GR ☐ AIR ☐ OTHER ☐		LB OZ PT QT GA				
	N S	E W	S M H					GR ☐ AIR ☐ OTHER ☐		LB OZ PT QT GA				

RECEIVED
JAN 07 2005
AGR. COMM. TRACY

REPORT PREPARED BY Philip A. Romero DATE 1-7-05

REVIEWED BY

FOR AGENCY USE ONLY

STATE OF CALIFORNIA - ENVIRONMENTAL PROTECTION AGENCY
DEPARTMENT OF PESTICIDE REGULATION
PESTICIDE USE REPORT (33-025 Rev 3/90) PMIS 0033

Rec.# M05-APL-01094-2

( ) Nursery

County	Section	Township	Range	Base & Meridian	Method	Permitte / Customer	Applicator Name & Address
39	8	02S	05E	M	A	B&B ARNAUDO	HFS Inc.
Operator Identification Number				Site Identification Number		Planted Area	P.O. BOX 1049
39-05-3902007				2-9		47.30 ac	TRACY, CA 95378-1049
Location						Block ID ARNAUDO F 2-9-J	
E OF CORRAL HOLLOW N OF LARCH * 05							
Date / Time Applied				Area Treated		Commodity or Site Treated	Crop ID
Proposed: 08/11/05 9:00 am				Actual			
Actual: 08/11/05 9:45 am				47.30 ac		ALFALFA	23001-00

Restricted Material	Chemical Number	Product and Manufacturer	Registration Number From Label	Total Formulated Product Used	Rate Per ac	Dilution Volume	
N	2536	LORSBAN 4E DOW ELANCO	62719-00220-AA-00000	5.91 gal	1.00 pt	10.00 gal	
N	99006	NUTRA WET J. R. SIMPLOT	07001-50519-AA-00000	1.18 gal	0.1000 qt	10.00 gal	

Days Reentry	Days Preharvest	Application Supervised By
24 hr	14 day	Gary Del Carlo

Environmental Changes / Comments

Submitted By:	Date	Time	PCA Name	
Denis Della Nina	08/13/05	11:07AM	Phillip Romena 4107	
Received By:	Box No.	Date	Time	Approved / Denied

NW	N	NE
W	Target Area	E
SW	S	SE

RECEIVED
AUG 16 2005
AGR. COMM. TRACY

STATE OF CALIFORNIA - ENVIRONMENTAL PROTECTION AGENCY
DEPARTMENT OF PESTICIDE REGULATION
PESTICIDE USE REPORT (33-025 Rev 3/90) PMIS 0033

Rec.# M05-APL-01003-1

( ) Nursery

County	Section	Township	Range	Base & Meridian	Method	Permitte / Customer	Applicator Name & Address
39	8	02S	05E	M	A	B&B ARNAUDO	HFS Inc. P.O. BOX 1049 TRACY, CA 95378-1049

Operator Identification Number	Site Identification Number	Planted Area
39-05-3902007	2-5	53.50 ac

Location	Block ID
WS TRACY BLVD N LARCH RD * 05	ARNAUDO F 2-5-J

Date / Time Applied	Area Treated	Commodity or Site Treated	Crop ID
Proposed: 08/12/05 1:00 pm Actual: 08/17/05 6:50 am	Actual 53.50 ac	ALFALFA	23001-00

Restricted Material	Chemical Number	Product and Manufacturer	Registration Number From Label	Total Formulated Product Used	Rate Per ac	Dilution Volume	
N	2536	LORSBAN 4E DOW ELANCO	62719-00220-AA-00000	6.69 gal	1.00 pt	10.00 gal	
N	99006	NUTRA WET J. R. SIMPLOT	07001-50519-AA-00000	1.34 gal	3.20 0Z	10.00 gal	

Days Reentry	Days Preharvest	Application Supervised By
24 hr	14 day	Gary Del Carlo

Environmental Changes / Comments

Submitted By:	Date	Time	PCA Name
Denis Della Nina	08/18/05	9:38AM	Phillip Romena 4107

Received By:	Box No.	Date	Time	Approved / Denied

NW	N	NE
W	Target Area	E
SW	S	SE

RECEIVED
AUG 19 2005
AGR. COMM. TRACY

STATE OF CALIFORNIA - ENVIRONMENTAL PROTECTION AGENCY

DEPARTMENT OF PESTICIDE REGULATION

PESTICIDE USE REPORT (33-025 Rev 3/90) PMIS 0033

Rec.# M05-APL-01002-3

( ) Nursery

County	Section	Township	Range	Base & Meridian	Method	Permitte / Customer	Applicator Name & Address
39	8	02S	05E	M	A	B&B ARNAUDO	HFS Inc.
Operator Identification Number				Site Identification Number		Planted Area	P.O. BOX 1049
39-05-3902007				2-8		42.00 ac	TRACY, CA 95378-1049
Location						Block ID ARNAUDO F 2-8-J	
E OF CORRAL HOLLOW N OF LARCH * 05							

Date / Time Applied	Area Treated	Commodity or Site Treated	Crop ID
Proposed: 08/12/05 6:10 am	Actual		
Actual: 08/12/05 7:10 am	42.00 ac	ALFALFA	23001-00

Restricted Material	Chemical Number	Product and Manufacturer	Registration Number From Label	Total Formulated Product Used	Rate Per ac	Dilution Volume	
N	2536	LORSBAN 4E DOW ELANCO	62719-00220-AA-00000	5.25 gal	1.00 pt	10.00 gal	
N	99006	NUTRA WET J. R. SIMPLOT	07001-50519-AA-00000	1.05 gal	3.20 0Z	10.00 gal	

Days Reentry	Days Preharvest	Application Supervised By
24 hr	14 day	Gary Del Carlo

Environmental Changes / Comments

Submitted By:	Date	Time	PCA Name	
Denis Della Nina	08/13/05	11:00AM	Phillip Romena 4107	
Received By:	Box No.	Date	Time	Approved / Denied

NW	N	NE
W	Target Area	E
SW	S	SE

RECEIVED

AUG 16 2005

AGR. COMM. TRACY

STATE OF CALIFORNIA - ENVIRONMENTAL PROTECTION AGENCY
DEPARTMENT OF PESTICIDE REGULATION
PESTICIDE USE REPORT (33-025 Rev 3/90) PMIS 0033

Rec.# M05-APL-01002-2

( ) Nursery

County	Section	Township	Range	Base & Meridian	Method	Permitte / Customer	Applicator Name & Address
39	17	02S	05E	M	A	B&B ARNAUDO	HFS Inc.
Operator Identification Number 39-05-3902007				Site Identification Number 2-7		Planted Area 42.00 ac	P.O. BOX 1049 TRACY, CA 95378-1049
Location E OF CORROAL HOLLOW N OF LARCH * 05						Block ID ARNAUDO F 2-7-J	
Date / Time Applied Proposed: 08/12/05 6:10 am Actual: 08/12/05 7:10 am				Area Treated Actual 42.00 ac		Commodity or Site Treated ALFALFA	Crop ID 23001-00

Restricted Material	Chemical Number	Product and Manufacturer	Registration Number From Label	Total Formulated Product Used	Rate Per ac	Dilution Volume	
N	2536	LORSBAN 4E DOW ELANCO	62719-00220-AA-00000	5.25 gal	1.00 pt	10.00 gal	
N	99006	NUTRA WET J. R. SIMPLOT	07001-50519-AA-00000	1.05 gal	3.20 0Z	10.00 gal	

Days Reentry	Days Preharvest	Application Supervised By
24 hr	14 day	Gary Del Carlo

Environmental Changes / Comments

Submitted By:	Date	Time	PCA Name
Denis Della Nina	08/13/05	11:00AM	Phillip Romena 4107

Received By:	Box No.	Date	Time	Approved / Denied

NW	N	NE
W	Target Area	E
SW	S	SE

RECEIVED
AUG 16 2005
AGR. COMM. TRACY

STATE OF CALIFORNIA - ENVIRONMENTAL PROTECTION AGENCY
DEPARTMENT OF PESTICIDE REGULATION
PESTICIDE USE REPORT (33-025 Rev 3/90) PMIS 0033

Rec.# M05-APL-01002-1

( ) Nursery

County	Section	Township	Range	Base & Meridian	Method	Permitte / Customer	Applicator Name & Address
39	17	02S	05E	M	A	B&B ARNAUDO	HFS Inc. P.O. BOX 1049 TRACY, CA 95378-1049

Operator Identification Number	Site Identification Number	Planted Area
39-05-3902007	2-6	47.90 ac

Location	Block ID
W OF TRACY BLVD N LARCH RD * 05	ARNAUDO F 2-6-J

Date / Time Applied	Area Treated	Commodity or Site Treated	Crop ID
Proposed: 08/12/05 6:10 am Actual: 08/12/05 7:10 am	Actual 48.00 ac	ALFALFA	23001-00

Restricted Material	Chemical Number	Product and Manufacturer	Registration Number From Label	Total Formulated Product Used	Rate Per ac	Dilution Volume	
N	2536	LORSBAN 4E DOW ELANCO	62719-00220-AA-00000	6.00 gal	1.00 pt	10.00 gal	
N	99006	NUTRA WET J. R. SIMPLOT	07001-50519-AA-00000	1.20 gal	3.20 0Z	10.00 gal	

Days Reentry	Days Preharvest	Application Supervised By
24 hr	14 day	Gary Del Carlo

Environmental Changes / Comments

Submitted By:	Date	Time	PCA Name
Denis Della Nina	08/13/05	11:00AM	Phillip Romena 4107

Received By:	Box No.	Date	Time	Approved / Denied

NW	N	NE
W	Target Area	E
SW	S	SE

RECEIVED
AUG 16 2005
AGR. COMM. TRACY

STATE OF CALIFORNIA - ENVIRONMENTAL PROTECTION AGENCY

DEPARTMENT OF PESTICIDE REGULATION

PESTICIDE USE REPORT (33-025 Rev 3/90) PMIS 0033

Rec.# M05-APL-01002-1

( ) Nursery

County	Section	Township	Range	Base & Meridian	Method	Permitte / Customer	Applicator Name & Address
39	8	02S	05E	M	A	B&B ARNAUDO	HFS Inc.
Operator Identification Number				Site Identification Number		Planted Area	P.O. BOX 1049
39-05-3902007				2-4		59.60 ac	TRACY, CA 95378-1049
Location						Block ID ARNAUDO F 2-4-J	
WS TRACY BLVD S SUGAR RD * 05							
Date / Time Applied				Area Treated		Commodity or Site Treated	Crop ID
Proposed: 08/12/05 6:10 am				Actual			
Actual: 08/12/05 7:10 am				59.60 ac		ALFALFA	23001-00

Restricted Material	Chemical Number	Product and Manufacturer	Registration Number From Label	Total Formulated Product Used	Rate Per ac	Dilution Volume	
N	2536	LORSBAN 4E DOW ELANCO	62719-00220-AA-00000	7.45 gal	1.00 pt	10.00 gal	
N	99006	NUTRA WET J. R. SIMPLOT	07001-50519-AA-00000	1.49 gal	3.20 0Z	10.00 gal	

Days Reentry	Days Preharvest	Application Supervised By
24 hr	14 day	Gary Del Carlo

Environmental Changes / Comments

Submitted By:	Date	Time	PCA Name	
Denis Della Nina	08/13/05	11:03AM	Phillip Romena 4107	
Received By:	Box No.	Date	Time	Approved / Denied

NW	N	NE
W	Target Area	E
SW	S	SE

RECEIVED

AUG 16 2005

AGR. COMM. TRACY

STATE OF CALIFORNIA

PRODUCTION AGRICULTURE MONTHLY PESTICIDE USE REPORT : MULTIPLE SECTION

PR-ENF-184 (EST. 10/91)

SEE INSTRUCTIONS ON THE REVERSE OF THIS FORM

DEPARTMENT OF PESTICIDE REGULATION
PESTICIDE ENFORCEMENT BRANCH

280618

1. MONTH	2. YEAR	3. COUNTY NO.
December	2005	39

4. COMMODITY / SITE TREATED	5. OPERATOR ID / PERMIT NO.	6. OPERATOR (GROWER)	7. ADDRESS	8. CITY	9. ZIP CODE
Alfalfa	39-05-3902007	Amando B+B ~~16505 Tracy Blvd~~	16505 Tracy Blvd	Tracy	95326

10. SECTION	11. TOWNSHIP	12. RANGE	13. BASE AND MERIDIAN	14. SITE IDENTIFICATION NUMBER	15. DATE AND TIME APPLICATION COMPLETED	16. TOTAL PLANTED ACRES	17. TOTAL TREATED ACRES	18. APP. METHOD (CHECK ONE)	19. EPA / CALIF. REG. NO. FROM LABEL	20. TOTAL PRODUCT USED (CIRCLE ONE UNIT OF MEASURE)	21. RATE PER ACRE	22. DILUTION	23. DAYS REENTRY	24. MANUFACTURER / NAME OF PRODUCT
8	N 2 (S)	5 (E) W	S (M) H	2-3 J	1000 12-16-05	62	62	GR AIR OTHER	352-392	15½ LB OZ PT QT (GA)	2pts	10 gpa		Dupont Velpar
8	N 2 (S)	5 (E) W	S (M) H	"	"	"	"	GR AIR OTHER	1812-257	24 LB OZ PT QT (GA)	3pts	"		Duppen Direx
8	N 2 (S)	5 (E) W	S (M) H	2-4 J	1300 12-16-05	59	59	GR AIR OTHER	352-392	15 LB OZ PT QT (GA)	2pts	10 gpa		Dupont Velpar
8	N 2 (S)	5 (E) W	S (M) H	"	"	"	"	GR AIR OTHER	1812-257	22 LB OZ PT QT (GA)	3pts	"		Duppen Direx
8	N 2 (S)	5 (E) W	S (M) H	2-5 J	1400 12-16-05	53	53	GR AIR OTHER	352-392	13½ LB OZ PT QT (GA)	2pts	10 gpa		Dupont Velpar
8	N 2 (S)	5 (E) W	S (M) H	"	"	"	"	GR AIR OTHER	1812-257	30 LB OZ PT QT (GA)	3pts	"		~~Duppen~~ Direx
17	N 2 (S)	5 (E) W	S (M) H	2-6 J	1600 12-16-05	47	47	GR AIR OTHER	352-392	12 LB OZ PT QT (GA)	2pts	10 gpa		~~Dupont~~ Velpar
17	N 2 (S)	5 (E) W	S (M) H	"	"	"	"	GR AIR OTHER	1812-257	17½ LB OZ PT QT (GA)	3pts	"		Direx
17	N 2 (S)	5 (E) W	S (M) H	2-7 J	0900 12-17-05	42	42	GR AIR OTHER	352-392	10½ LB OZ PT QT (GA)	2pts	10 gpa		Dupont Velpar
17	N 2 (S)	5 (E) W	S (M) H	"	"	"	"	GR AIR OTHER	1812-257	16 LB OZ PT QT (GA)	3pts	"		Duppen Direx

RECEIVED JAN 30 2005 AGR. COMM. TRACY

RECEIVED JAN 30 2005 AGR. COMM. TRACY

REPORT PREPARED BY Phillip A Romero DATE Jan 28, 2006

REVIEWED BY _____ FOR AGENCY USE ONLY

STATE OF CALIFORNIA

PRODUCTION AGRICULTURE MONTHLY PESTICIDE USE REPORT : MULTIPLE SECTION

PR-ENF-184 (EST. 10/91)

SEE INSTRUCTIONS ON THE REVERSE OF THIS FORM

DEPARTMENT OF PESTICIDE REGULATION
PESTICIDE ENFORCEMENT BRANCH

280619

1. MONTH	2. YEAR	3. COUNTY NO.
Dec	2005	39

4. COMMODITY / SITE TREATED	5. OPERATOR ID / PERMIT NO.	6. OPERATOR (GROWER)	7. ADDRESS	8. CITY	9. ZIP CODE
alfalfa	39-05-3902007	Amaudo B+B	16505 Tracy Blvd	Tracy	95376

10. SECTION	11. TOWNSHIP	12. RANGE	13. BASE AND MERIDAN	14. SITE IDENTIFICATION NUMBER	15. DATE AND TIME APPLICATION COMPLETED	16. TOTAL PLANTED ACRES	17. TOTAL TREATED ACRES	18. APP. METHOD (CHECK ONE)	19. EPA / CALIF. REG. NO. FROM LABEL	20. TOTAL PRODUCT USED (CIRCLE ONE UNIT OF MEASURE)	21. RATE PER ACRE	22. DILUTION	23. DAYS REENTRY	24. MANUFACTURER / NAME OF PRODUCT
8	N 2 (S)	5 (E) W	S (M) H	2-8 J	1100 12-17-05	42	42	GR ☒ AIR ☐ OTHER ☐	352-392	10½ LB OZ PT QT (GA)	2pts	10gpa		Dupont
8	N 2 (S)	5 (E) W	S (M) H	"	"	"	"	GR ☒ AIR ☐ OTHER ☐	1812-257	16 LB OZ PT QT (GA)	3pts	"		Velpar Gusper Dicey
8	N 2 (S)	5 (E) W	S (M) H	2-9 J	1300 12-17-05	42	42	GR ☒ AIR ☐ OTHER ☐	352-392	10½ LB OZ PT QT (GA)	2pts	10gpa		Dupont
8	N 2 (S)	5 (E) W	S (M) H	"		"	"	GR ☒ AIR ☐ OTHER ☐	1812-257	16 LB OZ PT QT (GA)	3pts	"		Velpar Gusper Dicey
	N S	E W	S M H					GR ☐ AIR ☐ OTHER ☐		LB OZ PT QT GA				
	N S	E W	S M H					GR ☐ AIR ☐ OTHER ☐		LB OZ PT QT GA				
	N S	E W	S M H					GR ☐ AIR ☐ OTHER ☐		LB OZ PT QT GA				
	N S	E W	S M H					GR ☐ AIR ☐ OTHER ☐		LB OZ PT QT GA				
	N S	E W	S M H					GR ☐ AIR ☐ OTHER ☐		LB OZ PT QT GA				
	N S	E W	S M H					GR ☐ AIR ☐ OTHER ☐		LB OZ PT QT GA				

RECEIVED
JAN 30 2005
AGR. COMM. TRACY

REPORT PREPARED BY Philip A. Rossman DATE 1/28/06

REVIEWED BY _____ FOR AGENCY USE ONLY

STATE OF CALIFORNIA

PRODUCTION AGRICULTURE MONTHLY PESTICIDE USE REPORT : MULTIPLE SITE/COMMODITY

PR-ENF-183 (EST. 10/91)

SEE INSTRUCTIONS ON THE REVERSE OF THIS FORM

RECEIVED
DEC 10 2006

DEPARTMENT OF PESTICIDE REGULATION
PESTICIDE ENFORCEMENT BRANCH
№ 025951

AGR. COMM. TRACY

1. MONTH	2. YEAR	3. NURSERY	4. COUNTY NO.
November	2006	☐	39

5. SECTION	6. TOWNSHIP	7. RANGE	8. BASE & MERIDIAN	9. OPERATOR ID / PERMIT NO.	10. OPERATOR (GROWER)	11. ADDRESS	12. CITY	13. ZIP CODE
8	2 (S) N	5 (E) W	(M) S H	39-06-3902007	Arnaudo B&B (Holly)	16505 Tracy Blvd	Tracy	95376

14. SITE IDENTIFICATION NUMBER	15. DATE AND TIME APPLICATION	16. COMMODITY / SITE TREATED	17. TOTAL PLANTED ACRES	18. TOTAL TREATED ACRES	19. APP. METHOD (CHECK ONE)	20. EPA / CALIF. REG. NO. FROM LABEL	21. TOTAL PRODUCT USED (CIRCLE ONE UNIT OF MEASURE)	22. RATE PER ACRE	23. DILUTION	24. DAYS REENTRY	25. MANUFACTURER / NAME OF PRODUCT
2-3 J	11-21-06	alfalfa	62	62	GR ☒ AIR ☐ OTHER ☐	100-1217	13½ LB OZ PT QT (GA)	1¾ pt	12 gpa		Syngenta Dimethoate
"	"	"	"	"	GR ☒ AIR ☐ OTHER ☐	352-392 ~~352-581~~	8 LB OZ PT QT (GA)	1 pt	"		Dupont Velpar
"	"	"	"	"	GR ☒ AIR ☐ OTHER ☐	1812-257	20 LB OZ PT QT (GA)	2½ pts	"		Dupont Direx
2-4 J	11-21-06	alfalfa	60	60	GR ☒ AIR ☐ OTHER ☐	100-1217	13½ LB OZ PT QT (GA)	1¾ pt	12 gpa		Syngenta Dimethoate
"	"	"	"	"	GR ☒ AIR ☐ OTHER ☐	352-392 ~~352-581~~	7½ LB OZ PT QT (GA)	1 pt	"		Dupont Velpar
"	"	"	"	"	GR ☒ AIR ☐ OTHER ☐	1812-257	19 LB OZ PT QT (GA)	2½ pts	"		Dupont Direx
2-5 J	11/22/06	alfalfa	54	54	GR ☒ AIR ☐ OTHER ☐	100-1217	12 LB OZ PT QT (GA)	1¾ pt	12 gpa		Syngenta Dimethoate
"	"	"	"	"	GR ☒ AIR ☐ OTHER ☐	352-392 ~~352-581~~	7 LB OZ PT QT (GA)	1 pt	"		Dupont Velpar
"	"	"	"	"	GR ☒ AIR ☐ OTHER ☐	1812-257	17 LB OZ PT QT (GA)	2½ pts	"		Dupont Direx
					GR ☐ AIR ☐ OTHER ☐		LB OZ PT QT GA				

REPORT PREPARED BY Philip C. Romera DATE 12-10-06

REVIEWED BY _____ FOR AGENCY USE ONLY

00814494

STATE OF CALIFORNIA

PRODUCTION AGRICULTURE MONTHLY PESTICIDE USE REPORT : MULTIPLE SITE/COMMODITY

PR-ENF-183 (EST. 10/91)

SEE INSTRUCTIONS ON THE REVERSE OF THIS FORM

RECEIVED DEC 10 2006

DEPARTMENT OF PESTICIDE REGULATION
PESTICIDE ENFORCEMENT BRANCH

№ 025953

AGR. COMM. TRACY

1. MONTH	2. YEAR	3. NURSERY	4. COUNTY NO.
November	2006	☐	39

5. SECTION	6. TOWNSHIP	7. RANGE	8. BASE & MERIDIAN	9. OPERATOR ID / PERMIT NO.	10. OPERATOR (GROWER)	11. ADDRESS	12. CITY	13. ZIP CODE
17	2 (S) N	5 (E) W	S (M) H	39-06-390 2007	Amando D&B (Holly)	16505 Tracy Blvd	Tracy	95376

14. SITE IDENTIFICATION NUMBER	15. DATE AND TIME APPLICATION	16. COMMODITY / SITE TREATED	17. TOTAL PLANTED ACRES	18. TOTAL TREATED ACRES	19. APP. METHOD (CHECK ONE)	20. EPA / CALIF. REG. NO. FROM LABEL	21. TOTAL PRODUCT USED (CIRCLE ONE UNIT OF MEASURE)	22. RATE PER ACRE	23. DILUTION	24. DAYS REENTRY	25. MANUFACTURER / NAME OF PRODUCT
2-8 J	11/24/06	alfalfa	42	42	GR ☒ AIR ☐ OTHER ☐	100-1217	9 LB OZ PT QT (GA)	1 3/4 pts	12 gpa		Syngenta Dromadone
"	"	"	"	"	GR ☒ AIR ☐ OTHER ☐	352-~~581~~ 392	5 1/2 LB OZ PT QT (GA)	1 pt	"		Dupont Velpar
"	"	"	"	"	GR ☒ AIR ☐ OTHER ☐	1812-257	13 1/2 LB OZ PT QT (GA)	2 1/2 pts	"		Dupont Direx
2-9 J	11/24/06	alfalfa	47	47	GR ☒ AIR ☐ OTHER ☐	100-1217	10 1/2 LB OZ PT QT (GA)	1 3/4 pts	12 gpa		Syngenta Dromadone
"	"	"	"	"	GR ☒ AIR ☐ OTHER ☐	352-~~581~~ 392	6 LB OZ PT QT (GA)	1 pt	"		Dupont Velpar
"	"	"	"	"	GR ☒ AIR ☐ OTHER ☐	1812-257	15 LB OZ PT QT (GA)	2 1/2 pts	"		Dupont Direx
					GR ☐ AIR ☐ OTHER ☐		LB OZ PT QT GA				
					GR ☐ AIR ☐ OTHER ☐		LB OZ PT QT GA				
					GR ☐ AIR ☐ OTHER ☐		LB OZ PT QT GA				
					GR ☐ AIR ☐ OTHER ☐		LB OZ PT QT GA				

REPORT PREPARED BY Phillip A. Romero DATE 12-10-06

REVIEWED BY _____ FOR AGENCY USE ONLY

0081494

STATE OF CALIFORNIA

PRODUCTION AGRICULTURE MONTHLY PESTICIDE USE REPORT : MULTIPLE SITE/COMMODITY

PR-ENF-183 (EST. 10/91)

SEE INSTRUCTIONS ON THE REVERSE OF THIS FORM

RECEIVED DEC 10 2006

DEPARTMENT OF PESTICIDE REGULATION
PESTICIDE ENFORCEMENT BRANCH
№ 025952

AGR. COMM. TRACY

1. MONTH	2. YEAR	3. NURSERY	4. COUNTY NO.
November	2006	☐	39

5. SECTION	6. TOWNSHIP	7. RANGE	8. BASE & MERIDIAN	9. OPERATOR ID / PERMIT NO.	10. OPERATOR (GROWER)	11. ADDRESS	12. CITY	13. ZIP CODE
17	2 (S) N	5 (E) W	S (M) H	39-06-390 2007	Amando B+B (Holly)	16505 Tracy Blvd	Tracy	95376

14. SITE IDENTIFICATION NUMBER	15. DATE AND TIME APPLICATION	16. COMMODITY / SITE TREATED	17. TOTAL PLANTED ACRES	18. TOTAL TREATED ACRES	19. APP. METHOD (CHECK ONE)	20. EPA / CALIF. REG. NO. FROM LABEL	21. TOTAL PRODUCT USED (CIRCLE ONE UNIT OF MEASURE)	22. RATE PER ACRE	23. DILUTION	24. DAYS REENTRY	25. MANUFACTURER / NAME OF PRODUCT
2-6 J	11/22/06	alfalfa	48	48	GR ☒ AIR ☐ OTHER ☐	100-1217	10½ LB OZ PT QT (GA)	1¾ pt	12 gpa		Syngenta Dramatone
"	"	"	"	"	GR ☒ AIR ☐ OTHER ☐	352-~~581~~ 392	6 LB OZ PT QT (GA)	1 pt	"		Dupont Velpar
"	"	"	"	"	GR ☒ AIR ☐ OTHER ☐	1812-257	15 LB OZ PT QT (GA)	2½ pts	"		Dupont Direx
2-7 J	11/22/06	alfalfa	42	42	GR ☒ AIR ☐ OTHER ☐	100-1217	9 LB OZ PT QT (GA)	1¾ pt	12 gpa		Syngenta Dramatone
"	"	"	"	"	GR ☒ AIR ☐ OTHER ☐	352-~~581~~ 392	5½ LB OZ PT QT (GA)	1 pt	"		Dupont Velpar
"	"	"	"	"	GR ☒ AIR ☐ OTHER ☐	1812-257	13½ LB OZ PT QT (GA)	2½ pts	"		Dupont Direx
					GR ☐ AIR ☐ OTHER ☐		LB OZ PT QT GA				
					GR ☐ AIR ☐ OTHER ☐		LB OZ PT QT GA				
					GR ☐ AIR ☐ OTHER ☐		LB OZ PT QT GA				
					GR ☐ AIR ☐ OTHER ☐		LB OZ PT QT GA				

REPORT PREPARED BY Philip R. Romero DATE 12-10-06

REVIEWED BY _____ FOR AGENCY USE ONLY

081494

STATE OF CALIFORNIA

PRODUCTION AGRICULTURE MONTHLY PESTICIDE USE REPORT : MULTIPLE SITE/COMMODITY

PR-ENF-183 (EST. 10/91)

SEE INSTRUCTIONS ON THE REVERSE OF THIS FORM

DEPARTMENT OF PESTICIDE REGULATION
PESTICIDE ENFORCEMENT BRANCH
№ 025942

1. MONTH	2. YEAR	3. NURSERY	4. COUNTY NO.
September	2006	☐	39

5. SECTION	6. TOWNSHIP	7. RANGE	8. BASE & MERIDIAN	9. OPERATOR ID / PERMIT NO.	10. OPERATOR (GROWER)	11. ADDRESS	12. CITY	13. ZIP CODE
8	2 (S) N	5 (E) W	S (M) H	39-06-390200 7	Cernando B+B Holly	16505 Tracy Blvd	Tracy	95376

14. SITE IDENTIFICATION NUMBER	15. DATE AND TIME APPLICATION	16. COMMODITY / SITE TREATED	17. TOTAL PLANTED ACRES	18. TOTAL TREATED ACRES	19. APP. METHOD (CHECK ONE)	20. EPA / CALIF. REG. NO. FROM LABEL	21. TOTAL PRODUCT USED (CIRCLE ONE UNIT OF MEASURE)	22. RATE PER ACRE	23. DILUTION	24. DAYS REENTRY	25. MANUFACTURER / NAME OF PRODUCT
2-3 J	9-1-06	alfalfa	62	62	GR ☒ AIR ☐ OTHER ☐	70506-9	434 LB (OZ) PT QT GA	7 oz	10 gpa		United Phosphorus Prem-up
2-4 J	9-2-06	"	60	60	GR ☒ AIR ☐ OTHER ☐	"	420 LB (OZ) PT QT GA	"	"		"
2-5 J	9-7-06	"	54	54	GR ☒ AIR ☐ OTHER ☐	"	216 LB (OZ) PT QT GA	4 oz	"		"
2-8 J	9-7-06	"	42	42	GR ☒ AIR ☐ OTHER ☐	"	168 LB (OZ) PT QT GA	"	"		"
2-9 J	9-8-06	"	47	47	GR ☒ AIR ☐ OTHER ☐	"	188 LB (OZ) PT QT GA	"	"		"
					GR ☐ AIR ☐ OTHER ☐		LB OZ PT QT GA				
					GR ☐ AIR ☐ OTHER ☐		LB OZ PT QT GA				
					GR ☐ AIR ☐ OTHER ☐		LB OZ PT QT GA				
					GR ☐ AIR ☐ OTHER ☐		LB OZ PT QT GA				
					GR ☐ AIR ☐ OTHER ☐		LB OZ PT QT GA				

RECEIVED
OCT 10 2006
AGR. COMM. TRACY

REPORT PREPARED BY Phillip C. Romero DATE 10-10-06

REVIEWED BY _____
FOR AGENCY USE ONLY

STATE OF CALIFORNIA

PRODUCTION AGRICULTURE MONTHLY PESTICIDE USE REPORT : MULTIPLE SITE/COMMODITY

PR-ENF-183 (EST. 10/91)

SEE INSTRUCTIONS ON THE REVERSE OF THIS FORM

DEPARTMENT OF PESTICIDE REGULATION
PESTICIDE ENFORCEMENT BRANCH

№ 025943

1. MONTH	2. YEAR	3. NURSERY	4. COUNTY NO.
September	2006	☐	39

5. SECTION	6. TOWNSHIP	7. RANGE	8. BASE & MERIDIAN	9. OPERATOR ID / PERMIT NO.	10. OPERATOR (GROWER)	11. ADDRESS	12. CITY	13. ZIP CODE
17	2 (S) N	5 (E) W	S (M) H	39-06-390207	Armando B+B Holly	16505 Tracy Blvd	Tracy	95376

14. SITE IDENTIFICATION NUMBER	15. DATE AND TIME APPLICATION	16. COMMODITY / SITE TREATED	17. TOTAL PLANTED ACRES	18. TOTAL TREATED ACRES	19. APP. METHOD (CHECK ONE)	20. EPA / CALIF. REG. NO. FROM LABEL	21. TOTAL PRODUCT USED (CIRCLE ONE UNIT OF MEASURE)	22. RATE PER ACRE	23. DILUTION	24. DAYS REENTRY	25. MANUFACTURER / NAME OF PRODUCT
26 J	9-8-06	alfalfa	48	48	GR ☒ AIR ☐ OTHER ☐	70506-9	192 LB (OZ) PT QT GA	4 oz	10 gpa		United Phosphorous Perm-up
"	9-9-06	"	42	42	GR ☒ AIR ☐ OTHER ☐	"	168 LB (OZ) PT QT GA	"	"		"
					GR ☐ AIR ☐ OTHER ☐		LB OZ PT QT GA				
					GR ☐ AIR ☐ OTHER ☐		LB OZ PT QT GA				
					GR ☐ AIR ☐ OTHER ☐		LB OZ PT QT GA				
					GR ☐ AIR ☐ OTHER ☐		LB OZ PT QT GA				
					GR ☐ AIR ☐ OTHER ☐		LB OZ PT QT GA				
					GR ☐ AIR ☐ OTHER ☐		LB OZ PT QT GA				
					GR ☐ AIR ☐ OTHER ☐		LB OZ PT QT GA				
					GR ☐ AIR ☐ OTHER ☐		LB OZ PT QT GA				

RECEIVED
OCT 10 2006
AGR. COMM. TRACY

REPORT PREPARED BY Philip G. Romero DATE 10-10-06

REVIEWED BY _____
FOR AGENCY USE ONLY

STATE OF CALIFORNIA

PRODUCTION AGRICULTURE MONTHLY PESTICIDE USE REPORT : MULTIPLE SECTION

PR-ENF-184 (EST. 10/91)

SEE INSTRUCTIONS ON THE REVERSE OF THIS FORM

DEPARTMENT OF PESTICIDE REGULATION
PESTICIDE ENFORCEMENT BRANCH

221841

1. MONTH	2. YEAR	3. COUNTY NO.
March	2006	39

4. COMMODITY / SITE TREATED	5. OPERATOR ID / PERMIT NO.	6. OPERATOR (GROWER)	7. ADDRESS	8. CITY	9. ZIP CODE
Warrior Alfalfa	39-06-390207	Amanda, Bob (Holly)	16505 Tracy Blvd	Tracy	95376

10. SECTION	11. TOWNSHIP	12. RANGE	13. BASE AND MERIDAN	14. SITE IDENTIFICATION NUMBER	15. DATE AND TIME APPLICATION COMPLETED	16. TOTAL PLANTED ACRES	17. TOTAL TREATED ACRES	18. APP. METHOD (CHECK ONE)	19. EPA / CALIF. REG. NO. FROM LABEL	20. TOTAL PRODUCT USED (CIRCLE ONE UNIT OF MEASURE)	21. RATE PER ACRE	22. DILUTION	23. DAYS REENTRY	24. MANUFACTURER / NAME OF PRODUCT
8	N 2 S	5 E W	S M H	2-3 J	1000 3-22-06	62	62	GR ☒ AIR ☐ OTHER ☐	✓ 100-1112	235 LB OZ PT QT GA	3.8 oz	10 gpa		Syngenta Warrior
8	N 2 S	5 E W	S M H	2-4 J	1200 3-22-06	60	60	GR ☒ AIR ☐ OTHER ☐	✓ "	228 LB OZ PT QT GA	3.8 oz	"		"
8	N 2 S	5 E W	S M H	2-5 J	1400 3-22-06	54	54	GR ☒ AIR ☐ OTHER ☐	✓ "	205 LB OZ PT QT GA	"	"		"
17	N 2 S	5 E W	S M H	2-6 J	1600 3-22-06	48	48	GR ☒ AIR ☐ OTHER ☐	✓ "	182 LB OZ PT QT GA	"	"		"
17	N 2 S	5 E W	S M H	2-7 J	0800 3-23-06	42	42	GR ☒ AIR ☐ OTHER ☐	✓ "	159 LB OZ PT QT GA	"	"		"
8	N 2 S	5 E W	S M H	2-8 J	1000 3-23-06	42	42	GR ☒ AIR ☐ OTHER ☐	✓ "	159 LB OZ PT QT GA	"	"		"
8	N 2 S	5 E W	S M H	2-9 J	1100 3-23-06	47	47	GR ☒ AIR ☐ OTHER ☐	✓ "	178 LB OZ PT QT GA	"	"		"
	N S	E W	S M H					GR ☐ AIR ☐ OTHER ☐		LB OZ PT QT GA				
	N S	E W	S M H					GR ☐ AIR ☐ OTHER ☐		LB OZ PT QT GA				
	N S	E W	S M H					GR ☐ AIR ☐ OTHER ☐		LB OZ PT QT GA				

RECEIVED
APR 10 2006
AGR. COMM. TRACY

RECEIVED
APR 10 2006
AGR. COMM. TRACY

REPORT PREPARED BY Philip C. Romena DATE 4-10-06

REVIEWED BY _____
FOR AGENCY USE ONLY

STATE OF CALIFORNIA

PRODUCTION AGRICULTURE MONTHLY PESTICIDE USE REPORT : MULTIPLE SITE/COMMODITY

PR-ENF-183 (EST. 10/91)

SEE INSTRUCTIONS ON THE REVERSE OF THIS FORM

DEPARTMENT OF PESTICIDE REGULATION
PESTICIDE ENFORCEMENT BRANCH

RECEIVED
No. 125997
DEC 21 2007
AGR. COMM. TRACY

1. MONTH	2. YEAR	3. NURSERY	4. COUNTY NO.
November	2007	☐	39

5. SECTION	6. TOWNSHIP	7. RANGE	8. BASE & MERIDIAN	9. OPERATOR ID / PERMIT NO.	10. OPERATOR (GROWER)	11. ADDRESS	12. CITY	13. ZIP CODE
8	2 S N	5 E W	S M H.	39-07-390 2007	Armando G+B (Holly)	16505 Tracy Blvd	Tracy	95376

14. SITE IDENTIFICATION NUMBER	15. DATE AND TIME APPLICATION	16. COMMODITY / SITE TREATED	17. TOTAL PLANTED ACRES	18. TOTAL TREATED ACRES	19. APP. METHOD (CHECK ONE)	20. EPA / CALIF. REG. NO. FROM LABEL	21. TOTAL PRODUCT USED (CIRCLE ONE UNIT OF MEASURE)	22. RATE PER ACRE	23. DILUTION	24. DAYS REENTRY	25. MANUFACTURER / NAME OF PRODUCT
2-1 J	11-19-07	alfalfa	82	82	GR AIR OTHER ☐	352-392	20½ LB OZ PT QT GA	2 pts	10 gpa		Dupont Vulcan
"	"	"	"	"	GR AIR OTHER ☐	352-678	26 LB OZ PT QT GA	2¼ pts	"		Dupont Direx
2-11 J	11-19-07	alfalfa	67	67	GR AIR OTHER ☐	352-392	17 LB OZ PT QT GA	2 pts	10 gpa		Dupont Vulcan
"	"	"	"	"	GR AIR OTHER ☐	352-678	21 LB OZ PT QT GA	2¼ pts	"		Dupont Direx
2-3 J	11-19-07	alfalfa	62	62	GR AIR OTHER ☐	352-392	15½ LB OZ PT QT GA	2 pts	10 gpa		Dupont Vulcan
"	"	"	"	"	GR AIR OTHER ☐	352-678	19 LB OZ PT QT GA	2¼ pts	"		Dupont Direx
2-4 J	11-19-07	alfalfa	60	60	GR AIR OTHER ☐	352-392	15 LB OZ PT QT GA	2 pts	10 gpa		Dupont Vulcan
"	"	"	"	"	GR AIR OTHER ☐	352-678	19 LB OZ PT QT GA	2¼ pts	"		Dupont Direx
2-5 J	11-20-07	alfalfa	54	54	GR AIR OTHER ☐	352-392	13½ LB OZ PT QT GA	2 pts	10 gpa		Dupont Vulcan
"	"	"	"	"	GR AIR OTHER ☐	352-678	17 LB OZ PT QT GA	2¼ pts	"		Dupont Direx

REPORT PREPARED BY ~~Dec 10, 2007~~ Phillip A. Romena DATE Dec 10, 2007

REVIEWED BY _____ FOR AGENCY USE ONLY

STATE OF CALIFORNIA - ENVIRONMENTAL PROTECTION AGENCY
DEPARTMENT OF PESTICIDE REGULATION
PESTICIDE USE REPORT (33-025 Rev 3/90) PMIS 0033

Rec.# M07-APL-00066-2

( ) Nursery

County	Section	Township	Range	Base & Meridian	Method	Permitte / Customer	Applicator Name & Address
39	17	02S	05E	M	A	B&B ARNAUDO HOLLY RA	HFS Inc.

Operator Identification Number: 39-07-3902007
Site Identification Number: 2-7
Planted Area: 42.00 ac
Block ID ARNAUDO F 2-7-J
P.O. BOX 1049
TRACY, CA 95378-1049
Location: E OF CORROAL HOLLOW N OF LARCH * 07

Date / Time Applied		Area Treated		Commodity or Site Treated	Crop ID
Proposed: 02/11/07	9:00 am	Actual			
Actual: 02/11/07	10:30 am	42.00	ac	ALFALFA	23001-00

Restricted Chemical Material	Number	Product and Manufacturer	Registration Number From Label	Total Formulated Product Used	Rate Per ac	Dilution Volume
N	5971	TRIFLURALIN 10T TENKOZ	62719-131-AA-55467	840.00 lb	20.00 lb	gal

Days Reentry	Days Preharvest	Application Supervised By
12 hr	0 day	Gary Del Carlo

Environmental Changes / Comments

Submitted By:	Date	Time	PCA Name
Denis Della Nina	2/22/200	12:03 PM	Phillip Romena 4107

Received By:	Box No.	Date	Time	Approved Denied

NW	N	NE
W	Target Area	E
SW	S	SE

RECEIVED
FEB 23 2007
AGR. COMM. TRACY

STATE OF CALIFORNIA

PRODUCTION AGRICULTURE MONTHLY PESTICIDE USE REPORT : MULTIPLE SECTION

PR-ENF-184 (EST. 10/91)

SEE INSTRUCTIONS ON THE REVERSE OF THIS FORM

RECEIVED
APR 09 2007
AGR. COMM. TRACY

DEPARTMENT OF PESTICIDE REGULATION
PESTICIDE ENFORCEMENT BRANCH

№ 117949

1. MONTH: March
2. YEAR: 2007
3. COUNTY NO.: 39
4. COMMODITY / SITE TREATED: alfalfa
6. OPERATOR ID / PERMIT NO.: 39-07-390207
8. OPERATOR (GROWER): Amaral B&B (Holly)
7. ADDRESS: 16505 Tracy Blvd
8. CITY: Tracy
9. ZIP CODE: 95376

10. SECTION	11. TOWNSHIP	12. RANGE	13. BASE AND MERIDIAN	14. SITE IDENTIFICATION NUMBER	15. DATE AND TIME APPLICATION COMPLETED	16. TOTAL PLANTED ACRES	17. TOTAL TREATED ACRES	18. APP. METHOD (CHECK ONE)	19. EPA / CALIF. REG. NO. FROM LABEL	20. TOTAL PRODUCT USED (CIRCLE ONE UNIT OF MEASURE)	21. RATE PER ACRE	22. DILUTION	23. DAYS REENTRY	24. MANUFACTURER / NAME OF PRODUCT
8	2 S	5 E W	S M H	2-5	3-8-07	54	54	GR ☒ AIR ☐ OTHER ☐	100-1112	205 LB (OZ) PT QT GA	3.8 oz	10 gpa		Syngenta Warrior
"	" N S	" E W	S M H	"	"	"	"	GR ☒ AIR ☐ OTHER ☐	51036-110	3 1/3 LB OZ PT QT (GA)	1/2 pt	"		Micro-flo Dimethoate 4
17	2 S	5 E W	S M H	2-6	3-9-07	48	48	GR ☒ AIR ☐ OTHER ☐	100-1112	182 LB (OZ) PT QT GA	3.8 oz	10 gpa		Syngenta Warrior
"	" N S	" E W	S M H	"	"	"	"	GR ☒ AIR ☐ OTHER ☐	51036-110	3 LB OZ PT QT (GA)	1/2 pt	"		Micro-flo Dimethoate 4
17	2 S	5 E W	S M H	2-7	3-9-07	42	42	GR ☒ AIR ☐ OTHER ☐	100-1112	160 LB (OZ) PT QT GA	3.8 oz	10 gpa		Syngenta Warrior
"	" N S	" E W	S M H	"	"	"	"	GR ☒ AIR ☐ OTHER ☐	51036-110	2 1/2 LB OZ PT QT (GA)	1/2 pt	"		Micro-flo Dimethoate 4
8	2 S	5 E W	S M H	2-8	3-9-07	42	42	GR ☒ AIR ☐ OTHER ☐	100-1112	160 LB (OZ) PT QT GA	3.8 oz	10 gpa		Syngenta Warrior
"	" N S	" E W	S M H	"	"	"	"	GR ☒ AIR ☐ OTHER ☐	51036-110	2 1/2 LB OZ PT QT (GA)	1/2 pt	"		Micro-flo Dimethoate 4
8	2 S	5 E W	S M H	2-9	3-9-07	47	47	GR ☐ AIR ☐ OTHER ☐	100-1112	182 LB (OZ) PT QT GA	3.8 oz	10 gpa		Syngenta Warrior
"	" N S	" E W	S M H	"	"	"	"	GR ☐ AIR ☐ OTHER ☐	51036-110	3 LB OZ PT QT (GA)	1/2 pt	"		Micro-flo Dimethoate 4

REPORT PREPARED BY: Phillip A. Romero

DATE: 4-9-07

REVIEWED BY: _____ FOR AGENCY USE ONLY

STATE OF CALIFORNIA

PRODUCTION AGRICULTURE MONTHLY PESTICIDE USE REPORT : MULTIPLE SITE/COMMODITY

PR-ENF-183 (EST. 10/91)

SEE INSTRUCTIONS ON THE REVERSE OF THIS FORM

RECEIVED
APR 09 2007
AGR. COMM. TRACY

DEPARTMENT OF PESTICIDE REGULATION
PESTICIDE ENFORCEMENT BRANCH
403571

1. MONTH	2. YEAR	3. NURSERY	4. COUNTY NO.
March	2007	☐	39

5. SECTION	6. TOWNSHIP	7. RANGE	8. BASE & MERIDIAN	9. OPERATOR ID / PERMIT NO.	10. OPERATOR (GROWER)	11. ADDRESS	12. CITY	13. ZIP CODE
8	2 (S)	5 (E)	S (M) H	38-07-390 2007	Armando B+B (Holly)	16505 Tracy Blvd	Tracy	95376

14. SITE IDENTIFICATION NUMBER	15. DATE AND TIME APPLICATION	16. COMMODITY / SITE TREATED	17. TOTAL PLANTED ACRES	18. TOTAL TREATED ACRES	19. APP. METHOD (CHECK ONE)	20. EPA / CALIF. REG. NO. FROM LABEL	21. TOTAL PRODUCT USED (CIRCLE ONE UNIT OF MEASURE)	22. RATE PER ACRE	23. DILUTION	24. DAYS REENTRY	25. MANUFACTURER / NAME OF PRODUCT
1-1	3-12-07	alfalfa	82	82	GR ☒ AIR ☐ OTHER ☐	241-379	3 3/4 LB OZ PT QT (GA)	6 oz	10 gpa		BASF Raptor
"	"	"	"	"	GR ☒ AIR ☐ OTHER ☐	42750-38	20 1/2 LB OZ PT QT (GA)	1 qt	"		Agri-star Butyrac 200
2-11	3-12-07	alfalfa	67	67	GR ☒ AIR ☐ OTHER ☐	241-379	3 LB OZ PT QT (GA)	6 oz	10 gpa		BASF Raptor
"	"	"	"	"	GR ☒ AIR ☐ OTHER ☐	42750-38	16 3/4 LB OZ PT QT (GA)	1 qt	"		Agri-star Butyrac 200
2-3	3-8-07	alfalfa	62	62	GR ☒ AIR ☐ OTHER ☐	100-1112	236 LB (OZ) PT QT GA	3.8 oz	10 gpa		Syngenta Warrior
"	"	"	"	"	GR ☒ AIR ☐ OTHER ☐	51036-110	3 3/4 LB OZ PT QT (GA)	1/2 pt	"		Micro-flo Dimethoate 4
2-4	3-8-07	alfalfa	60	60	GR ☒ AIR ☐ OTHER ☐	100-1112	228 LB (OZ) PT QT GA	3.8 oz	10 gpa		Syngenta Warrior
"	"	"	"	"	GR ☒ AIR ☐ OTHER ☐	51036-110	3 3/4 LB OZ PT QT (GA)	1/2 pt	"		Micro-flo Dimethoate 4
2-5	3-8-07	alfalfa	54	54	GR ☒ AIR ☐ OTHER ☐	100-1112	205 LB (OZ) PT QT GA	3.8 oz	10 gpa		Syngenta Warrior
"	"	"	"	"	GR ☒ AIR ☐ OTHER ☐	51036-110	3 1/2 LB OZ PT QT (GA)	1/2 pt	"		Micro-flo Dimethoate 4

REPORT PREPARED BY Philip G. Bowen DATE 4-9-07

REVIEWED BY _____ FOR AGENCY USE ONLY

STATE OF CALIFORNIA

DEPARTMENT OF PESTICIDE REGULATION
PESTICIDE ENFORCEMENT BRANCH

238024

PRODUCTION AGRICULTURE MONTHLY PESTICIDE USE REPORT : MULTIPLE SECTION

PR-ENF-184 (EST. 10/91)

SEE INSTRUCTIONS ON THE REVERSE OF THIS FORM

1. MONTH	2. YEAR	3. COUNTY NO.
November	2007	39

4. COMMODITY / SITE TREATED	5. OPERATOR ID / PERMIT NO.	6. OPERATOR (GROWER)	7. ADDRESS	8. CITY	9. ZIP CODE
Alfalfa	39-07-390 2007	Arnoldo B&B (Holly)	16505 Tracy Blvd	Tracy	95376

10. SECTION	11. TOWNSHIP	12. RANGE	13. BASE AND MERIDIAN	14. SITE IDENTIFICATION NUMBER	15. DATE AND TIME APPLICATION COMPLETED	16. TOTAL PLANTED ACRES	17. TOTAL TREATED ACRES	18. APP. METHOD (CHECK ONE)	19. EPA / CALIF. REG. NO. FROM LABEL	20. TOTAL PRODUCT USED (CIRCLE ONE UNIT OF MEASURE)	21. RATE PER ACRE	22. DILUTION	23. DAYS REENTRY	24. MANUFACTURER / NAME OF PRODUCT
17	N 2 (S)	(E) 5 W	S (M) H	2-6 J	11-20-07	48	48	GR ☒ AIR ☐ OTHER ☐	352-392	12 LB OZ PT QT (GA)	2pts	10gpa		Dupont Velpar
17	N 2 (S)	(E) 5 W	S (M) H	"	"	"	"	GR ☒ AIR ☐ OTHER ☐	352-678	15 LB OZ PT QT (GA)	2½pts	"		Dupont Direx
17	N 2 (S)	(E) 5 W	S (M) H	2-7 J	11-20-07	42	42	GR ☒ AIR ☐ OTHER ☐	352-392	10½ LB OZ PT QT (GA)	2pts	10gpa		Dupont Velpar
17	N 2 (S)	(E) 5 W	S (M) H	"	"	"	"	GR ☒ AIR ☐ OTHER ☐	352-678	13 LB OZ PT QT (GA)	2½pts	"		Dupont Direx
8	N 2 (S)	(E) 5 W	S (M) H	2-8 J	11-20-07	42	42	GR ☒ AIR ☐ OTHER ☐	352-392	10½ LB OZ PT QT (GA)	2pts	10gpa		Dupont Velpar
8	N 2 (S)	(E) 5 W	S (M) H	"	"	"	"	GR ☒ AIR ☐ OTHER ☐	352-678	13 LB OZ PT QT (GA)	2½pts	"		Dupont Direx
8	N 2 (S)	(E) 5 W	S (M) H	2-9 J	11-20-07	47	47	GR ☒ AIR ☐ OTHER ☐	352-392	12 LB OZ PT QT (GA)	2pts	10gpa		Dupont Velpar
8	N 2 (S)	(E) 5 W	S (M) H	"	"	"	"	GR ☒ AIR ☐ OTHER ☐	352-678	15 LB OZ PT QT (GA)	2½pts	"		Dupont Direx
	N S	E W	S M H					GR ☐ AIR ☐ OTHER ☐		LB OZ PT QT GA				
	N S	E W	S M H					GR ☐ AIR ☐ OTHER ☐		LB OZ PT QT GA				

Phillip C. Romera

DATE 12-10-07

REVIEWED BY

FOR AGENCY USE ONLY

RECEIVED
DEC 21 2007
AGR. COMM. TRACY

RECEIVED
SAN JOAQUIN COUNTY
09 FEB 20 AM 8:09
AGRIC. COMM.
STOCKTON

RECEIVED
DEC 1 0 2008
AGR. COMM. TRACY

STATE OF CALIFORNIA
PRODUCTION AGRICULTURE MONTHLY PESTICIDE USE REPORT : MULTIPLE SECTION
PR-ENF-184 (EST. 10/91)

DEPARTMENT OF PESTICIDE REGULATION
ENFORCEMENT BRANCH
296111

SEE INSTRUCTIONS ON THE REVERSE OF THIS FORM

1. MONTH	2. YEAR	3. COUNTY NO.
November	2008	39

4. COMMODITY / SITE TREATED	5. OPERATOR ID / PERMIT NO.	6. OPERATOR (GROWER)	7. ADDRESS	8. ZIP CODE
Alfalfa	39-06-390207	Amaral 6+8 (Holly)	16505 Tracy Blvd Tracy	95376

10. SECTION	11. TOWNSHIP	12. RANGE	13. BASE AND MERIDIAN	14. SITE IDENTIFICATION NUMBER	15. DATE AND TIME APPLICATION COMPLETED	16. TOTAL PLANTED ACRES	17. TOTAL TREATED ACRES	18. APP. METHOD (CHECK ONE)	19. EPA / CALIF. REG. NO. FROM LABEL	20. TOTAL PRODUCT USED (CIRCLE ONE UNIT OF MEASURE)	21. RATE PER ACRE	22. DILUTION	23. DAYS REENTRY	24. MANUFACTURER / NAME OF PRODUCT
8	2 N (S)	5 (E) W	S (M) H	2-1 J	11-14-08	82	82	GR ☒ AIR ☐ OTHER ☐	352-678	16 1/2 LB OZ PT QT (GA)	1.6pts	10gpa		Dupont Direx
"	" N S	" E W	S " M H	"	"	"	"	GR ☒ AIR ☐ OTHER ☐	352-392	16 1/2 LB OZ PT QT (GA)	1.6pts	"		Dupont Velpar
8	2 N (S)	5 (E) W	S (M) H	2-11 J	11-14-08	67	67	GR ☒ AIR ☐ OTHER ☐	352-678	13 1/2 LB OZ PT QT (GA)	1.6pts	10gpa		Dupont Direx
"	" N S	" E W	S " M H	"	"	"	"	GR ☒ AIR ☐ OTHER ☐	352-392	13 1/2 LB OZ PT QT (GA)	1.6pts	"		Dupont Velpar
9	2 N (S)	5 (E) W	S (M) H	2-12 J	11-14-08	153	153	GR ☒ AIR ☐ OTHER ☐	352-678	30 1/2 LB OZ PT QT (GA)	1.6pts	10gpa		Dupont Direx
"	" N S	" E W	S " M H	"	"	"	"	GR ☒ AIR ☐ OTHER ☐	352-392	30 1/2 LB OZ PT QT (GA)	"	"		Dupont Velpar
8	2 N (S)	5 (E) W	S (M) H	2-3 J	11-15-08	62	62	GR ☒ AIR ☐ OTHER ☐	352-678	12 1/2 LB OZ PT QT (GA)	1.6pts	10gpa		Dupont Direx
"	" N S	" E W	S " M H	"	"	"	"	GR ☒ AIR ☐ OTHER ☐	352-392	12 1/2 LB OZ PT QT (GA)	"	"		Dupont Velpar
8	2 N (S)	5 (E) W	S (M) H	2-4 J	11-15-08	60	60	GR ☒ AIR ☐ OTHER ☐	352-678	12 LB OZ PT QT (GA)	1.6pts	10gpa		Dupont Direx
"	" N S	" E W	S " M H	"	"	"	"	GR ☒ AIR ☐ OTHER ☐	352-392	12 LB OZ PT QT (GA)	1.6pts	"		Dupont Velpar

REPORT PREPARED BY Philip A. Romero DATE 12-10-08

REVIEWED BY _____
FOR AGENCY USE ONLY

STATE OF CALIFORNIA

PRODUCTION AGRICULTURE MONTHLY PESTICIDE USE REPORT : MULTIPLE SECTION

PR-ENF-184 (EST. 10/91)

RECEIVED
DEC 1 0 2008
AGR. COMM. TRACY

DEPARTMENT OF PESTICIDE REGULATION
ENFORCEMENT BRANCH
296110

SEE INSTRUCTIONS ON THE REVERSE OF THIS FORM

1. MONTH	2. YEAR	3. COUNTY NO.
November	2008	39

4. COMMODITY / SITE TREATED	5. OPERATOR ID / PERMIT NO.	6. OPERATOR (GROWER)	7. ADDRESS	8. CITY	9. ZIP CODE
Alfalfa	39-08-3902007	Amando B&B (Holly)	16505 Tracy Blvd	Tracy	95376

10. SECTION	11. TOWNSHIP	12. RANGE	13. BASE AND MERIDIAN	14. SITE IDENTIFICATION NUMBER	15. DATE AND TIME APPLICATION COMPLETED	16. TOTAL PLANTED ACRES	17. TOTAL TREATED ACRES	18. APP. METHOD (CHECK ONE)	19. EPA / CALIF. REG. NO. FROM LABEL	20. TOTAL PRODUCT USED (CIRCLE ONE UNIT OF MEASURE)	21. RATE PER ACRE	22. DILUTION	23. DAYS REENTRY	24. MANUFACTURER / NAME OF PRODUCT
8	2 N (S)	5 (E) W	S (M) H	2-5 J	11-15-08	54	54	GR ☒ AIR ☐ OTHER ☐	352-678	11 LB OZ PT QT (GA)	1.6pts	10gpa		Dupont Direx
"	" N S	" E W	S " M H	"	"	"	"	GR ☒ AIR ☐ OTHER ☐	352-392	11 LB OZ PT QT (GA)	1.6pts	"		Dupont Velpar
17	2 N (S)	5 (E) W	S (M) H	2-6 J	11-15-08	48	48	GR ☒ AIR ☐ OTHER ☐	352-678	9½ LB OZ PT QT (GA)	1.6pts	10gpa		Dupont Direx
"	" N S	" E W	S " M H	"	"	"	"	GR ☒ AIR ☐ OTHER ☐	352-392	9½ LB OZ PT QT (GA)	1.6pts	"		Dupont Velpar
17	2 N (S)	5 (E) W	S (M) H	2-7 J	11-15-08	42	42	GR ☒ AIR ☐ OTHER ☐	352-678	8½ LB OZ PT QT (GA)	1.6pts	10gpa		Dupont Direx
"	" N S	" E W	S " M H	"	"	"	"	GR ☒ AIR ☐ OTHER ☐	352-392	8½ LB OZ PT QT (GA)	1.6pts	"		Dupont Velpar
8	2 N (S)	5 (E) W	S (M) H	2-8 J	11-17-08	42	42	GR ☒ AIR ☐ OTHER ☐	352-678	8½ LB OZ PT QT (GA)	1.6pts	10gpa		Dupont Direx
"	" N S	" E W	S " M H	"	"	"	"	GR ☒ AIR ☐ OTHER ☐	352-392	8½ LB OZ PT QT (GA)	1.6pts	"		Dupont Velpar
8	2 N (S)	5 (E) W	S (M) H	2-9 J	11-17-08	47	47	GR ☒ AIR ☐ OTHER ☐	352-678	9½ LB OZ PT QT (GA)	1.6pts	10gpa		Dupont Direx
"	" N S	" E W	S " M H	"	"	"	"	GR ☒ AIR ☐ OTHER ☐	352-392	9½ LB OZ PT QT (GA)	1.6pts	"		Dupont Velpar

REPORT PREPARED BY Phillip G. Romero DATE 12-10-08

REVIEWED BY _____ FOR AGENCY USE ONLY

STATE OF CALIFORNIA

PRODUCTION AGRICULTURE MONTHLY PESTICIDE USE REPORT : MULTIPLE SITE/COMMODITY

PR-ENF-183 (EST. 10/91)

SEE INSTRUCTIONS ON THE REVERSE OF THIS FORM

RECEIVED APR 10 2008 AGR. COMM. TRACY

DEPARTMENT OF PESTICIDE REGULATION
PESTICIDE ENFORCEMENT BRANCH

№ 171501

1. MONTH	2. YEAR	3. NURSERY	4. COUNTY NO.
March	2008	☐	39

5. SECTION	6. TOWNSHIP	7. RANGE	8. BASE & MERIDIAN	9. OPERATOR ID / PERMIT NO.	10. OPERATOR (GROWER)	11. ADDRESS	12. CITY	13. ZIP CODE
8	2 (S) N	5 (E) W	S (M) H	39-08-390207	Amaulo B&B Holly	16505 Tracy Blvd	Tracy	95376

14. SITE IDENTIFICATION NUMBER	15. DATE AND TIME APPLICATION	16. COMMODITY / SITE TREATED	17. TOTAL PLANTED ACRES	18. TOTAL TREATED ACRES	19. APP. METHOD (CHECK ONE)	20. EPA / CALIF. REG. NO. FROM LABEL	21. TOTAL PRODUCT USED (CIRCLE ONE UNIT OF MEASURE)	22. RATE PER ACRE	23. DILUTION	24. DAYS REENTRY	25. MANUFACTURER / NAME OF PRODUCT
2-1 J	3-3-08	alfalfa	82	82	GR ☒ AIR ☐ OTHER ☐	100-1112	311 LB (OZ) PT QT GA	3.8 oz	10 gpa		Syngenta Warrior
"	"	"	"	"	GR ☒ AIR ☐ OTHER ☐	51036-110	41 LB OZ (PT) QT GA	1/2 pt	"		Micro-flo Dimethoate 4
2-11 J	3-3-08	alfalfa	67	67	GR ☒ AIR ☐ OTHER ☐	100-1112	254 LB (OZ) PT QT GA	3.8 oz	10 gpa		Syngenta Warrior
"	"	"	"	"	GR ☒ AIR ☐ OTHER ☐	51036-110	33 1/2 LB OZ (PT) QT GA	1/2 pt	"		Micro-flo Dimethoate 4
2-3 J	3-3-08	alfalfa	62	62	GR ☒ AIR ☐ OTHER ☐	100-1112	235 LB (OZ) PT QT GA	3.8 oz	10 gpa		Syngenta Warrior
"	"	"	"	"	GR ☒ AIR ☐ OTHER ☐	51036-110	31 LB OZ (PT) QT GA	1/2 pt	"		Micro-flo Dimethoate 4
2-4 J	3-3-08	alfalfa	60	60	GR ☒ AIR ☐ OTHER ☐	100-1112	228 LB (OZ) PT QT GA	3.8 oz	10 gpa		Syngenta Warrior
"	"	"	"	"	GR ☒ AIR ☐ OTHER ☐	51036-110	30 LB OZ (PT) QT GA	1/2 pt	"		Micro-flo Dimethoate 4
2-5 J	3-4-08	alfalfa	54	54	GR ☒ AIR ☐ OTHER ☐	100-1112	205 LB (OZ) PT QT GA	3.8 oz	10 gpa		Syngenta Warrior
"	"	"	"	"	GR ☒ AIR ☐ OTHER ☐	51036-110	27 LB OZ (PT) QT GA	"	"		Micro flo Dimethoate 4

REPORT PREPARED BY Philip A. Romero DATE 4-10-08

REVIEWED BY _____ FOR AGENCY USE ONLY

STATE OF CALIFORNIA

DEPARTMENT OF PESTICIDE REGULATION
PESTICIDE ENFORCEMENT BRANCH

PRODUCTION AGRICULTURE MONTHLY PESTICIDE USE REPORT : MULTIPLE SITE/COMMODITY

PR-ENF-183 (EST. 10/91)

№ 171502

SEE INSTRUCTIONS ON THE REVERSE OF THIS FORM

1. MONTH	2. YEAR	3. NURSERY	4. COUNTY NO.
March	2008	☐	39

5. SECTION	6. TOWNSHIP	7. RANGE	8. BASE & MERIDIAN	9. OPERATOR ID / PERMIT NO.	10. OPERATOR (GROWER)	11. ADDRESS	12. CITY	13. ZIP CODE
8	2 (S) N	5 (E) W	S (M) H	39-08-3902007	Fernando & B (Holly)	16505 Tracy Blvd	Tracy	95376

14. SITE IDENTIFICATION NUMBER	15. DATE AND TIME APPLICATION	16. COMMODITY / SITE TREATED	17. TOTAL PLANTED ACRES	18. TOTAL TREATED ACRES	19. APP. METHOD (CHECK ONE)	20. EPA / CALIF. REG. NO. FROM LABEL	21. TOTAL PRODUCT USED (CIRCLE ONE UNIT OF MEASURE)	22. RATE PER ACRE	23. DILUTION	24. DAYS REENTRY	25. MANUFACTURER / NAME OF PRODUCT
2-9 5	3-4-08	alfalfa	42	42	GR ☒ AIR ☐ OTHER ☐	100-1112	159 LB (OZ) PT QT GA	3.8 oz	10 gpa		Syngenta Warrior
"	"	"	"	"	GR ☒ AIR ☐ OTHER ☐	51036-110	21 LB OZ (PT) QT GA	1/2 pt	"		micro-flo Dimethoate 4
2-9 5	3-4-08	alfalfa	47	47	GR ☒ AIR ☐ OTHER ☐	100-1112	178 LB (OZ) PT QT GA	3.8 oz	10 gpa		Syngenta Warrior
"	"	"	"	"	GR ☒ AIR ☐ OTHER ☐	51036-110	23 1/2 LB OZ (PT) QT GA	1/2 pt	"		micro-flo Dimethoate 4
~~2-10 5~~					GR ☐ AIR ☐ OTHER ☐		LB OZ PT QT GA				
					GR ☐ AIR ☐ OTHER ☐		LB OZ PT QT GA				
					GR ☐ AIR ☐ OTHER ☐		LB OZ PT QT GA				
					GR ☐ AIR ☐ OTHER ☐		LB OZ PT QT GA				
					GR ☐ AIR ☐ OTHER ☐		LB OZ PT QT GA				
					GR ☐ AIR ☐ OTHER ☐		LB OZ PT QT GA				

RECEIVED
APR 10 2008
AGR. COMM. TRACY

REPORT PREPARED BY Phillip C. Romero DATE 4-10-08

REVIEWED BY _____ FOR AGENCY USE ONLY

STATE OF CALIFORNIA

PRODUCTION AGRICULTURE MONTHLY PESTICIDE USE REPORT : MULTIPLE SECTION

PR-ENF-184 (EST. 10/91)

DEPARTMENT OF PESTICIDE REGULATION
ENFORCEMENT BRANCH

296101

SEE INSTRUCTIONS ON THE REVERSE OF THIS FORM

1. MONTH	2. YEAR	3. COUNTY NO.
March	2008	39

4. COMMODITY / SITE TREATED	5. OPERATOR ID / PERMIT NO.	6. OPERATOR (GROWER)	7. ADDRESS	8. CITY	9. ZIP CODE
Alfalfa	39-08-390207	Arnaudo Bros (Holly)	16505 Tracy Blvd	Tracy	95376

10. SECTION	11. TOWNSHIP	12. RANGE	13. BASE AND MERIDIAN	14. SITE IDENTIFICATION NUMBER	15. DATE AND TIME APPLICATION COMPLETED	16. TOTAL PLANTED ACRES	17. TOTAL TREATED ACRES	18. APP. METHOD (CHECK ONE)	19. EPA / CALIF. REG. NO. FROM LABEL	20. TOTAL PRODUCT USED (CIRCLE ONE UNIT OF MEASURE)	21. RATE PER ACRE	22. DILUTION	23. DAYS REENTRY	24. MANUFACTURER / NAME OF PRODUCT
17	2 S	5 E W	S M H	2-6 J	3-4-08	48	48	GR ☒ AIR ☐ OTHER ☐	100-1112	182 LB OZ PT QT GA	3.8 oz	10 gpa		Syngenta Warrior
"	" N S	" E W	S " M H	"	"	"	"	GR ☒ AIR ☐ OTHER ☐	51036-110	24 LB OZ PT QT GA	1/2 pt	"		Micro-flo Dimethoate 4
17	2 S	5 E W	S M H	2-7 J	3-4-08	42	42	GR ☒ AIR ☐ OTHER ☐	100-1112	159 LB OZ PT QT GA	3.8 oz	10 gpa		Syngenta Warrior
"	" N S	" E W	S " M H	"	"	"	"	GR ☒ AIR ☐ OTHER ☐	51036-110	21 LB OZ PT QT GA	1/2 pt	"		Micro-flo Dimethoate 4
	N S	E W	S M H					GR ☐ AIR ☐ OTHER ☐		LB OZ PT QT GA				
	N S	E W	S M H					GR ☐ AIR ☐ OTHER ☐		LB OZ PT QT GA				
	N S	E W	S M H					GR ☐ AIR ☐ OTHER ☐		LB OZ PT QT GA				
	N S	E W	S M H					GR ☐ AIR ☐ OTHER ☐		LB OZ PT QT GA				
	N S	E W	S M H					GR ☐ AIR ☐ OTHER ☐		LB OZ PT QT GA				
	N S	E W	S M H					GR ☐ AIR ☐ OTHER ☐		LB OZ PT QT GA				

RECEIVED
APR 10 2008
AGR. COMM. TRACY

REPORT PREPARED BY Phillip G. Roman DATE 4-10-08

REVIEWED BY _____ FOR AGENCY USE ONLY

CALIFORNIA

DEPARTMENT OF PESTICIDE REGULATION
PESTICIDE ENFORCEMENT BRANCH

238080

DUCTION AGRICULTURE MONTHLY PESTICIDE USE REPORT : MULTIPLE SECTION

ENF-184 (EST. 10/91)

SEE INSTRUCTIONS ON THE REVERSE OF THIS FORM

1. MONTH	2. YEAR	3. COUNTY NO.
February	2008	39

4. COMMODITY / SITE TREATED	5. OPERATOR ID / PERMIT NO.	6. OPERATOR (GROWER)	7. ADDRESS	8. CITY	9. ZIP CODE
Oats	39-08-390 2007	Arnaudo B+B (Holly)	16505 Tracy Blvd	Tracy	95376

10. SECTION	11. TOWNSHIP	12. RANGE	13. BASE AND MERIDIAN	14. SITE IDENTIFICATION NUMBER	15. DATE AND TIME APPLICATION COMPLETED	16. TOTAL PLANTED ACRES	17. TOTAL TREATED ACRES	18. APP. METHOD (CHECK ONE)	19. EPA / CALIF. REG. NO. FROM LABEL	20. TOTAL PRODUCT USED (CIRCLE ONE UNIT OF MEASURE)	21. RATE PER ACRE	22. DILUTION	23. DAYS REENTRY	24. MANUFACTURER / NAME OF PRODUCT
8	N 2 S	5 E W	S M H	2-10 J	2-15-08	53	53	GR ☒ AIR ☐ OTHER ☐	71368-7	10 LB OZ PT QT GA	1½ pts	10 gpa		Nu Farm Weeder 64
"	" N S	" E W	S " M H	2-2 J	"	62	62	GR ☒ AIR ☐ OTHER ☐	"	11½ LB OZ PT QT GA	"	"		"
9	N 2 S	5 E W	S M H	2-13 J	2-16-08	51	51	GR ☒ AIR ☐ OTHER ☐	"	9½ LB OZ PT QT GA	"	"		"
"	" N S	" E W	S " M H	2-14 J	"	56	56	GR ☐ AIR ☐ OTHER ☐	"	10½ LB OZ PT QT GA	"	"		"
	N S	E W	S M H					GR ☐ AIR ☐ OTHER ☐		LB OZ PT QT GA				
	N S	E W	S M H					GR ☐ AIR ☐ OTHER ☐		LB OZ PT QT GA				
	N S	E W	S M H					GR ☐ AIR ☐ OTHER ☐		LB OZ PT QT GA				
	N S	E W	S M H					GR ☐ AIR ☐ OTHER ☐		LB OZ PT QT GA				
	N S	E W	S M H					GR ☐ AIR ☐ OTHER ☐		LB OZ PT QT GA				
	N S	E W	S M H					GR ☐ AIR ☐ OTHER ☐		LB OZ PT QT GA				

RECEIVED
MAR 0 7 2008
AGR. COMM. TRACY

REPORT PREPARED BY: Ronnie

DATE 3-10-08

REVIEWED BY _____ FOR AGENCY USE ONLY

STATE OF CALIFORNIA

PRODUCTION AGRICULTURE MONTHLY PESTICIDE USE REPORT : MULTIPLE SECTION

PR-ENF-184 (EST. 10/91)

SEE INSTRUCTIONS ON THE REVERSE OF THIS FORM

DEPARTMENT OF PESTICIDE REGULATION
PESTICIDE ENFORCEMENT BRANCH

238082

1. MONTH	2. YEAR	3. COUNTY NO.
February	2008	39

4. COMMODITY / SITE TREATED	5. OPERATOR ID / PERMIT NO.	6. OPERATOR (GROWER)	7. ADDRESS	8. CITY	9. ZIP CODE
Alfalfa	39-08-3802007	Amando B+B (Holly)	16505 Tracy Blvd	Tracy	95376

10. SECTION	11. TOWNSHIP	12. RANGE	13. BASE AND MERIDIAN	14. SITE IDENTIFICATION NUMBER	15. DATE AND TIME APPLICATION COMPLETED	16. TOTAL PLANTED ACRES	17. TOTAL TREATED ACRES	18. APP. METHOD (CHECK ONE)	19. EPA / CALIF. REG. NO. FROM LABEL	20. TOTAL PRODUCT USED (CIRCLE ONE UNIT OF MEASURE)	21. RATE PER ACRE	22. DILUTION	23. DAYS REENTRY	24. MANUFACTURER / NAME OF PRODUCT
8	N 2 (S)	5 (E) W	S (M) H	2-3 J	2-9-08	62	62	GR ☒ AIR ☐ OTHER ☐	241-410	46½ LB OZ PT QT (GA)	6 pts	10 gpa		BASF Prowl H2O
17	N 2 (S)	5 (E) W	S (M) H	2-7 J	2-9-08	42	42	GR ☒ AIR ☐ OTHER ☐	"	31½ LB OZ PT QT (GA)	"	"		"
9	N 2 (S)	5 (E) W	S (M) H	2-12 J	2-28-08	153	153	GR ☒ AIR ☐ OTHER ☐	241-379	7 LB OZ PT QT (GA)	6 oz	10 gpa		BASF Raptor
"	" N S	" E W	S " M H	"	"	"	"	GR ☒ AIR ☐ OTHER ☐	42750-38	38 LB OZ PT QT (GA)	1 qt	"		Albaugh Butyrac 200
	N S	E W	S M H					GR ☐ AIR ☐ OTHER ☐		LB OZ PT QT GA				
	N S	E W	S M H					GR ☐ AIR ☐ OTHER ☐		LB OZ PT QT GA				
	N S	E W	S M H					GR ☐ AIR ☐ OTHER ☐		LB OZ PT QT GA				
	N S	E W	S M H					GR ☐ AIR ☐ OTHER ☐		LB OZ PT QT GA				
	N S	E W	S M H					GR ☐ AIR ☐ OTHER ☐		LB OZ PT QT GA				
	N S	E W	S M H					GR ☐ AIR ☐ OTHER ☐		LB OZ PT QT GA				

RECEIVED
MAR 07 2008
AGR. COMM. TRACY

REPORT PREPARED BY Phillip R. Romero DATE 3-10-08

REVIEWED BY _____
FOR AGENCY USE ONLY

APPENDIX D

EDR® Radius Map Report Executive Summary

EXECUTIVE SUMMARY

A search of available environmental records was conducted by Environmental Data Resources, Inc (EDR). The report was designed to assist parties seeking to meet the search requirements of EPA's Standards and Practices for All Appropriate Inquiries (40 CFR Part 312), the ASTM Standard Practice for Environmental Site Assessments (E 1527-05) or custom requirements developed for the evaluation of environmental risk associated with a parcel of real estate.

TARGET PROPERTY INFORMATION

ADDRESS

CORRAL HOLLOW ROAD
TRACY, CA 95304

COORDINATES

Latitude (North):	37.770300 - 37' 46' 13.1"
Longitude (West):	121.446700 - 121' 26' 48.1"
Universal Tranverse Mercator:	Zone 10
UTM X (Meters):	636807.5
UTM Y (Meters):	4181260.8
Elevation:	7 ft. above sea level

USGS TOPOGRAPHIC MAP ASSOCIATED WITH TARGET PROPERTY

Target Property Map:	37121-G4 UNION ISLAND, CA
Most Recent Revision:	1978

AERIAL PHOTOGRAPHY IN THIS REPORT

Portions of Photo from:	2006, 2005

TARGET PROPERTY SEARCH RESULTS

The target property was not listed in any of the databases searched by EDR.

DATABASES WITH NO MAPPED SITES

No mapped sites were found in EDR's search of available ("reasonably ascertainable ") government records either on the target property or within the search radius around the target property for the following databases:

STANDARD ENVIRONMENTAL RECORDS

Federal NPL site list

NPL..... National Priority List
Proposed NPL..... Proposed National Priority List Sites

EXECUTIVE SUMMARY

NPL LIENS..... Federal Superfund Liens

Federal Delisted NPL site list

Delisted NPL..... National Priority List Deletions

Federal CERCLIS list

CERCLIS..... Comprehensive Environmental Response, Compensation, and Liability Information System

Federal CERCLIS NFRAP site List

CERC-NFRAP..... CERCLIS No Further Remedial Action Planned

Federal RCRA CORRACTS facilities list

CORRACTS..... Corrective Action Report

Federal RCRA non-CORRACTS TSD facilities list

RCRA-TSDF..... RCRA - Transporters, Storage and Disposal

Federal RCRA generators list

RCRA-LQG..... RCRA - Large Quantity Generators
RCRA-CESQG..... RCRA - Conditionally Exempt Small Quantity Generator

Federal institutional controls / engineering controls registries

US ENG CONTROLS..... Engineering Controls Sites List
US INST CONTROL..... Sites with Institutional Controls

State- and tribal - equivalent NPL

RESPONSE..... State Response Sites

State- and tribal - equivalent CERCLIS

ENVIROSTOR..... EnviroStor Database

State and tribal landfill and/or solid waste disposal site lists

SWF/LF..... Solid Waste Information System

State and tribal leaking storage tank lists

INDIAN LUST..... Leaking Underground Storage Tanks on Indian Land

State and tribal registered storage tank lists

INDIAN UST..... Underground Storage Tanks on Indian Land

State and tribal voluntary cleanup sites

VCP..... Voluntary Cleanup Program Properties

INDIAN VCP..... Voluntary Cleanup Priority Listing

ADDITIONAL ENVIRONMENTAL RECORDS

Local Brownfield lists

US BROWNFIELDS..... A Listing of Brownfields Sites

Local Lists of Landfill / Solid Waste Disposal Sites

DEBRIS REGION 9..... Torres Martinez Reservation Illegal Dump Site Locations
ODI..... Open Dump Inventory
WMUDS/SWAT..... Waste Management Unit Database
HAULERS..... Registered Waste Tire Haulers Listing
INDIAN ODI..... Report on the Status of Open Dumps on Indian Lands

Local Lists of Hazardous waste / Contaminated Sites

HIST Cal-Sites..... Historical Calsites Database
SCH..... School Property Evaluation Program
Toxic Pits..... Toxic Pits Cleanup Act Sites

Local Land Records

LIENS 2..... CERCLA Lien Information
LUCIS..... Land Use Control Information System
LIENS..... Environmental Liens Listing
DEED..... Deed Restriction Listing

Records of Emergency Release Reports

HMIRS..... Hazardous Materials Information Reporting System
LDS..... Land Disposal Sites Listing
MCS..... Military Cleanup Sites Listing

Other Ascertainable Records

RCRA-NonGen..... RCRA - Non Generators
DOT OPS..... Incident and Accident Data
DOD..... Department of Defense Sites
FUDS..... Formerly Used Defense Sites
CONSENT..... Superfund (CERCLA) Consent Decrees
ROD..... Records Of Decision
UMTRA..... Uranium Mill Tailings Sites
MINES..... Mines Master Index File
TRIS..... Toxic Chemical Release Inventory System
TSCA..... Toxic Substances Control Act
FTTS..... FIFRA/ TSCA Tracking System - FIFRA (Federal Insecticide, Fungicide, & Rodenticide Act)/TSCA (Toxic Substances Control Act)
HIST FTTS..... FIFRA/TSCA Tracking System Administrative Case Listing
SSTS..... Section 7 Tracking Systems
ICIS..... Integrated Compliance Information System
PADS..... PCB Activity Database System
MLTS..... Material Licensing Tracking System

RADINFO..... Radiation Information Database
RAATS..... RCRA Administrative Action Tracking System
CA BOND EXP. PLAN..... Bond Expenditure Plan
Notify 65..... Proposition 65 Records
DRYCLEANERS..... Cleaner Facilities
WIP..... Well Investigation Program Case List
INDIAN RESERV..... Indian Reservations
SCRD DRYCLEANERS..... State Coalition for Remediation of Drycleaners Listing
PWS..... Public Water System Data

EDR PROPRIETARY RECORDS

EDR Proprietary Records

Manufactured Gas Plants..... EDR Proprietary Manufactured Gas Plants

SURROUNDING SITES: SEARCH RESULTS

Surrounding sites were identified in the following databases.

Elevations have been determined from the USGS Digital Elevation Model and should be evaluated on a relative (not an absolute) basis. Relative elevation information between sites of close proximity should be field verified. Sites with an elevation equal to or higher than the target property have been differentiated below from sites with an elevation lower than the target property.
Page numbers and map identification numbers refer to the EDR Radius Map report where detailed data on individual sites can be reviewed.

Sites listed in ***bold italics*** are in multiple databases.

Unmappable (orphan) sites are not considered in the foregoing analysis.

STANDARD ENVIRONMENTAL RECORDS

Federal RCRA generators list

RCRA-SQG: RCRAInfo is EPA's comprehensive information system, providing access to data supporting the Resource Conservation and Recovery Act (RCRA) of 1976 and the Hazardous and Solid Waste Amendments (HSWA) of 1984. The database includes selective information on sites which generate, transport, store, treat and/or dispose of hazardous waste as defined by the Resource Conservation and Recovery Act (RCRA). Small quantity generators (SQGs) generate between 100 kg and 1,000 kg of hazardous waste per month.

A review of the RCRA-SQG list, as provided by EDR, and dated 09/10/2008 has revealed that there are 2 RCRA-SQG sites within approximately 0.75 miles of the target property.

Equal/Higher Elevation	Address	Direction / Distance	Map ID	Page
STEVE RARIDON	*10928 W LARCH RD*	*SE 1/4 - 1/2 (0.484 mi.)*	*17*	*25*

Lower Elevation	Address	Direction / Distance	Map ID	Page
BROWN TRUCKING	*20679 CORRAL HOLLOW RD*	*WNW 1/4 - 1/2 (0.374 mi.)*	*15*	*23*

Federal ERNS list

ERNS: The Emergency Response Notification System records and stores information on reported releases of oil and hazardous substances. The source of this database is the U.S. EPA.

A review of the ERNS list, as provided by EDR, and dated 12/31/2007 has revealed that there are 4 ERNS sites within approximately 0.5 miles of the target property.

Lower Elevation	Address	Direction / Distance	Map ID	Page
20500 HOLLY DRIVE	20500 HOLLY DRIVE	E 1/8 - 1/4 (0.139 mi.)	A5	15
20500 HOLLY DR	20500 HOLLY DR	E 1/8 - 1/4 (0.139 mi.)	A6	15
20500 HOLLY DR.	20500 HOLLY DR.	E 1/8 - 1/4 (0.139 mi.)	A7	15
20500 HOLLY DR	20500 HOLLY DR	E 1/8 - 1/4 (0.139 mi.)	A9	16

State and tribal leaking storage tank lists

LUST: The Leaking Underground Storage Tank Incident Reports contain an inventory of reported leaking underground storage tank incidents. The data come from the State Water Resources Control Board Leaking Underground Storage Tank Information System.

A review of the LUST list, as provided by EDR, and dated 01/06/2009 has revealed that there are 10 LUST sites within approximately 1 mile of the target property.

Equal/Higher Elevation	Address	Direction / Distance	Map ID	Page
UNOCAL #6348 Status: Completed - Case Closed	*3788 TRACY BLVD N*	*ESE 1/2 - 1 (0.669 mi.)*	*D24*	*32*
SHELL #204-7884-0901 Status: Completed - Case Closed	*3725 TRACY BLVD N*	*ESE 1/2 - 1 (0.714 mi.)*	*E26*	*33*
FRONTIER TRANSPORT Status: Open - Site Assessment	*425 LARCH RD*	*ESE 1/2 - 1 (0.730 mi.)*	*F29*	*35*
TRACY BLVD CHEVRON Status: Open - Site Assessment	*3775 TRACY BLVD N*	*ESE 1/2 - 1 (0.755 mi.)*	*E31*	*40*
RALPH HAYES & SON INC Status: Completed - Case Closed	*835 CLOVER RD W (AKA:*	*SE 1/2 - 1 (0.826 mi.)*	*33*	*42*
COAST COUNTIES EXPRESS Status: Completed - Case Closed	*4131 INDUSTRIAL WAY*	*ESE 1/2 - 1 (0.859 mi.)*	*G34*	*43*
MCKESSONS DISTRIBUTION CE Status: Completed - Case Closed	*4110 INDUSTRIAL*	*ESE 1/2 - 1 (0.862 mi.)*	*G35*	*44*
ARCO #2093 Status: Completed - Case Closed	*3425 TRACY BLVD N*	*SE 1/2 - 1 (0.876 mi.)*	*H36*	*45*
J & B MURPHY TRUCKING Status: Open - Site Assessment	*355 ENTERPRISE*	*ESE 1/2 - 1 (0.904 mi.)*	*37*	*49*

Lower Elevation	Address	Direction / Distance	Map ID	Page
HOLLY SUGAR - TRACY PLANT Status: Open - Site Assessment	*20500 HOLLY DR*	*E 1/8 - 1/4 (0.139 mi.)*	*A11*	*20*

SLIC: SLIC Region comes from the California Regional Water Quality Control Board.

A review of the SLIC list, as provided by EDR, and dated 01/06/2009 has revealed that there are 4 SLIC sites within approximately 1 mile of the target property.

Equal/Higher Elevation	Address	Direction / Distance	Map ID	Page
WELLS FARGO PROPERTY SITE (FOR	503 LARCH RD	ESE 1/2 - 1 (0.824 mi.)	32	42
TRACY CORNERS	3301 NORTH TRACY BLVD.	SE 1/2 - 1 (0.914 mi.)	39	50
Facility Status: Open - Inactive				

Lower Elevation	Address	Direction / Distance	Map ID	Page
Not reported	***20500 HOLLY DRIVE***	***E 1/8 - 1/4 (0.139 mi.)***	***A10***	***16***
Facility Status: Open - Site Assessment				
Facility Status: Open				
HOLLY SUGAR - TRACY PLANT	***20500 HOLLY DR***	***E 1/8 - 1/4 (0.139 mi.)***	***A11***	***20***

State and tribal registered storage tank lists

UST: The Underground Storage Tank database contains registered USTs. USTs are regulated under Subtitle I of the Resource Conservation and Recovery Act (RCRA). The data come from the State Water Resources Control Board's Hazardous Substance Storage Container Database.

A review of the UST list, as provided by EDR, and dated 11/04/2008 has revealed that there are 3 UST sites within approximately 0.75 miles of the target property.

Equal/Higher Elevation	Address	Direction / Distance	Map ID	Page
C&S WHOLESALE GROCERS	4276 N TRACY BLVD	ESE 1/2 - 1 (0.661 mi.)	D23	31
TRACY TRUCK AND AUTO STOP	3940 N TRACY BLVD	ESE 1/2 - 1 (0.716 mi.)	F27	33

Lower Elevation	Address	Direction / Distance	Map ID	Page
SPRECKELS SUGAR COMPANY	20500 HOLLY DR	E 1/8 - 1/4 (0.139 mi.)	A8	15

AST: The Aboveground Storage Tank database contains registered ASTs. The data come from the State Water Resources Control Board's Hazardous Substance Storage Container Database.

A review of the AST list, as provided by EDR, and dated 11/01/2007 has revealed that there is 1 AST site within approximately 0.75 miles of the target property.

Lower Elevation	Address	Direction / Distance	Map ID	Page
HOLLY SUGAR CORP.	***20500 HOLLY DR.***	***E 1/8 - 1/4 (0.139 mi.)***	***A4***	***13***

ADDITIONAL ENVIRONMENTAL RECORDS

Local Lists of Landfill / Solid Waste Disposal Sites

SWRCY: A listing of recycling facilities in California.

A review of the SWRCY list, as provided by EDR, and dated 01/05/2009 has revealed that there is 1

SWRCY site within approximately 1 mile of the target property.

Equal/Higher Elevation	Address	Direction / Distance	Map ID	Page
PINOS RECYCLING CO	3320 N TRACY BLVD	SE 1/2 - 1 (0.913 mi.)	H38	49

Local Lists of Hazardous waste / Contaminated Sites

US CDL: A listing of clandestine drug lab locations. The U.S. Department of Justice ("the Department") provides this web site as a public service. It contains addresses of some locations where law enforcement agencies reported they found chemicals or other items that indicated the presence of either clandestine drug laboratories or dumpsites. In most cases, the source of the entries is not the Department, and the Department has not verified the entry and does not guarantee its accuracy. Members of the public must verify the accuracy of all entries by, for example, contacting local law enforcement and local health departments.

A review of the US CDL list, as provided by EDR, and dated 07/01/2008 has revealed that there is 1 US CDL site within approximately 0.5 miles of the target property.

Equal/Higher Elevation	Address	Direction / Distance	Map ID	Page
11422 WEST LARCH ROAD	11422 WEST LARCH ROAD	S 1/4 - 1/2 (0.364 mi.)	B14	23

CDL: A listing of drug lab locations. Listing of a location in this database does not indicate that any illegal drug lab materials were or were not present there, and does not constitute a determination that the location either requires or does not require additional cleanup work.

A review of the CDL list, as provided by EDR, and dated 09/30/2008 has revealed that there is 1 CDL site within approximately 0.5 miles of the target property.

Equal/Higher Elevation	Address	Direction / Distance	Map ID	Page
Not reported	11422 W LARCH RD	S 1/4 - 1/2 (0.364 mi.)	B13	23

Local Lists of Registered Storage Tanks

CA FID UST: The Facility Inventory Database contains active and inactive underground storage tank locations. The source is the State Water Resource Control Board.

A review of the CA FID UST list, as provided by EDR, and dated 10/31/1994 has revealed that there are 5 CA FID UST sites within approximately 0.75 miles of the target property.

Equal/Higher Elevation	Address	Direction / Distance	Map ID	Page
ORTEGA BROS.	*21482 S CORRAL HOLLOW R*	*SW 1/2 - 1 (0.565 mi.)*	*18*	*27*
RALPH HAYES & SON INC.	*10765 W CLOVER RD*	*S 1/2 - 1 (0.596 mi.)*	*C20*	*29*
BUNZL FOOD SERVICE	*4276 N TRACY BLVD*	*ESE 1/2 - 1 (0.661 mi.)*	*D21*	*30*
FRONTIER TRANSPORTATION	*425 LARCH RD*	*ESE 1/2 - 1 (0.730 mi.)*	*F30*	*36*

Lower Elevation	Address	Direction / Distance	Map ID	Page
HOLLY SUGAR CORP.	*20500 HOLLY DR.*	*E 1/8 - 1/4 (0.139 mi.)*	*A4*	*13*

HIST UST: Historical UST Registered Database.

A review of the HIST UST list, as provided by EDR, and dated 10/15/1990 has revealed that there are 4 HIST UST sites within approximately 0.75 miles of the target property.

Equal/Higher Elevation	Address	Direction / Distance	Map ID	Page
RALPH HAYES & SON INC.	10765 W. CLOVER RD	S 1/2 - 1 (0.596 mi.)	C19	28
COLLINS FOOD SERVICE	4276 N TRACY BLVD	ESE 1/2 - 1 (0.661 mi.)	D22	31
CARL COX TRACY SHELL	3925 N TRACY BLVD	ESE 1/2 - 1 (0.719 mi.)	E28	34

Lower Elevation	Address	Direction / Distance	Map ID	Page
HOLLY SUGAR CORP.	*20500 HOLLY DR.*	*E 1/8 - 1/4 (0.139 mi.)*	*A4*	*13*

SWEEPS UST: Statewide Environmental Evaluation and Planning System. This underground storage tank listing was updated and maintained by a company contacted by the SWRCB in the early 1990's. The listing is no longer updated or maintained. The local agency is the contact for more information on a site on the SWEEPS list.

A review of the SWEEPS UST list, as provided by EDR, and dated 06/01/1994 has revealed that there are 5 SWEEPS UST sites within approximately 0.75 miles of the target property.

Equal/Higher Elevation	Address	Direction / Distance	Map ID	Page
ORTEGA BROS.	*21482 S CORRAL HOLLOW R*	*SW 1/2 - 1 (0.565 mi.)*	*18*	*27*
RALPH HAYES & SON INC.	*10765 W CLOVER RD*	*S 1/2 - 1 (0.596 mi.)*	*C20*	*29*
BUNZL FOOD SERVICE	*4276 N TRACY BLVD*	*ESE 1/2 - 1 (0.661 mi.)*	*D21*	*30*
FRONTIER TRANSPORTATION	*425 LARCH RD*	*ESE 1/2 - 1 (0.730 mi.)*	*F30*	*36*

Lower Elevation	Address	Direction / Distance	Map ID	Page
HOLLY SUGAR CORP.	*20500 HOLLY DR.*	*E 1/8 - 1/4 (0.139 mi.)*	*A4*	*13*

Records of Emergency Release Reports

CHMIRS: The California Hazardous Material Incident Report System contains information on reported hazardous material incidents, i.e., accidental releases or spills. The source is the California Office of Emergency Services.

A review of the CHMIRS list, as provided by EDR, and dated 12/31/2007 has revealed that there is 1 CHMIRS site within approximately 0.5 miles of the target property.

Lower Elevation	Address	Direction / Distance	Map ID	Page
Not reported Date Completed: 04-NOV-90 Date Completed: 22-MAY-91	*20500 HOLLY DRIVE*	*E 1/8 - 1/4 (0.139 mi.)*	*A10*	*16*

Other Ascertainable Records

FINDS: The Facility Index System contains both facility information and "pointers" to other sources of information that contain more detail. These include: RCRIS; Permit Compliance System (PCS); Aerometric Information Retrieval System (AIRS); FATES (FIFRA [Federal Insecticide Fungicide Rodenticide Act] and TSCA Enforcement System, FTTS [FIFRA/TSCA Tracking System]; CERCLIS; DOCKET (Enforcement Docket used to manage and track information on civil judicial enforcement cases for all environmental statutes); Federal Underground Injection Control (FURS); Federal Reporting Data System (FRDS); Surface Impoundments (SIA); TSCA Chemicals in Commerce Information System (CICS); PADS; RCRA-J (medical waste transporters/disposers); TRIS; and TSCA. The source of this database is the U.S. EPA/NTIS.

A review of the FINDS list, as provided by EDR, and dated 10/30/2008 has revealed that there are 3 FINDS sites within approximately 0.5 miles of the target property.

Equal/Higher Elevation	Address	Direction / Distance	Map ID	Page
STEVE RARIDON	***10928 W LARCH RD***	***SE 1/4 - 1/2 (0.484 mi.)***	***17***	***25***

Lower Elevation	Address	Direction / Distance	Map ID	Page
SPRECKELS SUGAR COMPANY	20500 HOLLY DRIVE	E 1/8 - 1/4 (0.139 mi.)	A1	7
BROWN TRUCKING	***20679 CORRAL HOLLOW RD***	***WNW 1/4 - 1/2 (0.374 mi.)***	***15***	***23***

CA WDS: California Water Resources Control Board - Waste Discharge System.

A review of the CA WDS list, as provided by EDR, and dated 06/19/2007 has revealed that there is 1 CA WDS site within approximately 0.5 miles of the target property.

Lower Elevation	Address	Direction / Distance	Map ID	Page
SPRECKELS SUGAR CO TRACY FAC	20500 HOLLY DR	E 1/8 - 1/4 (0.139 mi.)	A12	22

Cortese: The sites for the list are designated by the State Water Resource Control Board (LUST), the Integrated Waste Board (SWF/LS), and the Department of Toxic Substances Control (Cal-Sites). This listing is no longer updated by the state agency.

A review of the Cortese list, as provided by EDR, and dated 04/01/2001 has revealed that there are 11 Cortese sites within approximately 1 mile of the target property.

Equal/Higher Elevation	Address	Direction / Distance	Map ID	Page
UNOCAL #6348	***3788 TRACY BLVD N***	***ESE 1/2 - 1 (0.669 mi.)***	***D24***	***32***
HESTER TRUCKING INC	3810 TRACY BLVD N	ESE 1/2 - 1 (0.670 mi.)	D25	32
SHELL #204-7884-0901	***3725 TRACY BLVD N***	***ESE 1/2 - 1 (0.714 mi.)***	***E26***	***33***
FRONTIER TRANSPORT	***425 LARCH RD***	***ESE 1/2 - 1 (0.730 mi.)***	***F29***	***35***
TRACY BLVD CHEVRON	***3775 TRACY BLVD N***	***ESE 1/2 - 1 (0.755 mi.)***	***E31***	***40***
RALPH HAYES & SON INC	***835 CLOVER RD W (AKA:***	***SE 1/2 - 1 (0.826 mi.)***	***33***	***42***
COAST COUNTIES EXPRESS	***4131 INDUSTRIAL WAY***	***ESE 1/2 - 1 (0.859 mi.)***	***G34***	***43***
MCKESSONS DISTRIBUTION CE	***4110 INDUSTRIAL***	***ESE 1/2 - 1 (0.862 mi.)***	***G35***	***44***
ARCO #2093	***3425 TRACY BLVD N***	***SE 1/2 - 1 (0.876 mi.)***	***H36***	***45***
J & B MURPHY TRUCKING	***355 ENTERPRISE***	***ESE 1/2 - 1 (0.904 mi.)***	***37***	***49***

Lower Elevation	Address	Direction / Distance	Map ID	Page
HOLLY SUGAR - TRACY PLANT	***20500 HOLLY DR***	***E 1/8 - 1/4 (0.139 mi.)***	***A11***	***20***

EXECUTIVE SUMMARY

HAZNET: The data is extracted from the copies of hazardous waste manifests received each year by the DTSC. The annual volume of manifests is typically 700,000-1,000,000 annually, representing approximately 350,000-500,000 shipments. Data from non-California manifests & continuation sheets are not included at the present time. Data are from the manifests submitted without correction, and therefore many contain some invalid values for data elements such as generator ID, TSD ID, waste category, & disposal method. The source is the Department of Toxic Substance Control is the agency

A review of the HAZNET list, as provided by EDR, and dated 12/31/2006 has revealed that there are 3 HAZNET sites within approximately 0.5 miles of the target property.

Equal/Higher Elevation	Address	Direction / Distance	Map ID	Page
COUNTY OF SAN JOAQUIN	11157 W LARCH RD	SSE 1/4 - 1/2 (0.403 mi.)	16	25

Lower Elevation	Address	Direction / Distance	Map ID	Page
HOLLY SUGAR CORP/SPRECKELS SUG	20500 HOLLY DR	E 1/8 - 1/4 (0.139 mi.)	A2	7
HOLLY SUGAR - TRACY PLANT	***20500 HOLLY DR***	***E 1/8 - 1/4 (0.139 mi.)***	***A11***	***20***

EMI: Toxics and criteria pollutant emissions data collected by the ARB and local air pollution agencies

A review of the EMI list, as provided by EDR, and dated 12/31/2006 has revealed that there is 1 EMI site within approximately 0.5 miles of the target property.

Lower Elevation	Address	Direction / Distance	Map ID	Page
HOLLY SUGAR CORPORATION	20500 S HOLLY DR	E 1/8 - 1/4 (0.139 mi.)	A3	9

EXECUTIVE SUMMARY

Due to poor or inadequate address information, the following sites were not mapped:

Site Name	Database(s)
VAQUERO FARMS, INC.	CA FID UST, CONTRA COSTA CO. SITE LIST, SWEEPS UST
LAWRENCE LIVERMORE LABORATORY/SITE	SWEEPS UST
LAWRENCE LIVERMORE LABORATORY	SWEEPS UST
W. HWY 205, POST MILE 12.5	CDL
TRACY AUXILLARY FIELD #5	CHMIRS, SLIC
TRACY MUNI LDFL	CERC-NFRAP
TOSCO C/O CONCOPHILLIPS	LUST
RALPH HAYES & SON INC	UST
CORRAL HOLLOW LANDFILL	UST
RHODES BEAN SUPPLY COOP	UST
TRINKLE & BOYS AG FLYING SERVICE	UST
FRONTIER TRANSPORTATION	UST
TRACY BALL PARK WELL	UST
CHEVRON #1718**	UST
TRACY BP OIL* #11194-30224	UST
EMERALD HOMES	UST
EMERALD HOMES	UST
HEINBOCKEL HARBOR	UST
MURPHY FAMILY TRUST	UST
RIVERA, ANTHONY	UST
TRACY AIRPORT	UST
E. THOMAS GRAHAM	HIST UST
MOBIL OIL CORPORATION	HIST UST
EVA COELHO	HIST UST
LAWERNCE LIVERMORE SITE 300	AST
NORSCO INC	HAZNET
SHELL SERVICE STATION	RCRA-SQG, FINDS, HAZNET, EMI
NICKELES TRUCKING INC	RCRA-SQG, FINDS
TRACY, CITY OF (EAST ELEVENTH ST.	SLIC
HALEY FLYING SERVICE	SLIC
RANKINS AG SERVICE	SLIC
TRACY CORNERS	SLIC
RENOWN ENTERPRISES	SLIC
TRACY MS4 PHASE II	CA WDS
R & D CONCEPTS INC.	EMI

APPENDIX E

Preliminary Screen For Potential Vapor Intrusion Conditions Matrix

Preliminary Screen for Potential Vapor Intrusion Conditions Matrix
Holly Suragr Sports Park
WKA No. 8404.01

Phase I ESA Preliminary Screen for Potential Vapor Intrusion Conditions (pVIC) matrix includes a (1) ***Search Radius Test***, (2) ***Chemicals of Concern Test (COC)***, and (3) a ***Critical Distance Test***[1].

(1) Search Radius Test: Are there any known or suspect contaminated sites in the primary area of concern within the corresponding search radii? (see attached Table 1).

☐ Yes ☑ No If No, then screening for a pVIC is complete and no pVIC *currently* exists, go to #4. If Yes, then:

(2) **Chemicals of Concern**[2] **Test**: Are COC likely to be present within the area of concern for those known or suspect contaminated sites identified based on the Search Distance Test?

☐ Yes ☐ No If No, then screening for a pVIC is complete and no pVIC *currently* exists, go to #4. If Yes, then:

If Yes, check all COC that apply on attached Table 2.

(3) Critical Distance Test: A plume test to determine whether or not COC in the contaminated plume(s) may be within the critical distance.

(3a) Is information related to the contaminated(s) plume available (i.e. isoconcentration maps, site drawings, etc.)?
☐ Yes ☐ No

(3b) If ***No***, then screening for a pVIC is complete and no pVIC *currently* exists, go to #4. If ***Yes***, then:

(3c) Is the site less than 100 feet to the nearest edge of a contaminated [non-petroleum hydrocarbon] plume(s)?
☐ Yes ☐ No

(3d) Is the site less than 30 feet to the nearest edge of a dissolved petroleum hydrocarbon plume(s)?
☐ Yes ☐ No

If the distance from the nearest edge of a contaminated plume to the nearest existing or planned structure on the site is less than 100 feet for non-petroleum hydrocarbon COC, or less than 30 feet for dissolved petroleum hydrocarbons, then it is presumed that a pVIC *currently* exists beneath the site. If the distance from the nearest edge of the contaminated plume is greater than or equal to 100 feet for non-petroleum hydrocarbons, or 30 feet for dissolved petroleum hydrocarbon chemicals of concern, then it is presumed unlikely that a pVIC *currently* exists beneath the site.

(4) Is it likely that a pVIC *currently* exists beneath the site?

☐ Yes ☑ No If *Yes*, then recommend performing a full scope VIC assessment according to ASTM E 2600-08.

[1] Based on guidance presented in the ASTM E 2600-08 Standard.

[2] Chemical(s) of concern (COC): See attached table for typical chemicals of concern (as presented in Appendix X6 of the ASTM E 2600-08 Standard).

Table 1
Preliminary Screen for Potential Vapor Intrusion Conditions Search Distance Test

	Non Petroleum Hydrocarbon Chemicals of Concern		*Petroleum Hydrocarbon Chemicals of Concern*		No. of Facilities Listed (within Search Radius)
	Surrounding the Site	*Upgradient of the Site*	*Surrounding the Site*	*Upgradient of the Site*	
Federal	**Approximate Minimum Search Distance (miles)**				
Federal NPL Site List	*1/3*	*1*	*1/10*	*1/10*	0
Federal CERCLIS List	*1/3*	*1/2*	*1/10*	*1/10*	0
Federal RCRA CORRACTS facilities	*1/3*	*1*	*1/10*	*1/10*	0
Federal RCRA non CORRACTS TSD facilities	*1/3*	*1/2*	*1/10*	*1/10*	0
Federal Institutional Control / Engineering Control Registries	*site only*	-	*site only*	-	0
Federal ERNS List	*site only*	-	*site only*	-	0
State					
State-equivalent NPL (Hist. Cal-Sites)	*1/3*	*1*	*1/10*	*1*	0
State-equivalent CERCLIS (RESPONSE)	*1/3*	*1/2*	*1/10*	*1/2*	0
State Landfill and/or Solid Waste Disposal Site Lists	*1/3*	*1/2*	*1/10*	*1/2*	0
Leaking Underground Storage Tanks (LUST)	*1/3*	*1/2*	*1/10*	*1/2*	0
Registered Storage Tanks (ASTs and USTs)	*site only*	-	*site only*	-	0
Institutional Control Registries [No State-equivalent for Eng. Controls]	*site only*	-	*site only*	-	0
Voluntary Cleanup Sites	*1/3*	*1/2*	*1/10*	*1/2*	0
Brownfield Sites	*1/3*	*1/2*	*1/10*	*1/2*	0
Additional Environmental Record Sources					
DTSC EnviroStor	*1/3*	*1/2*	*1/10*	*1/2*	0
SLIC	*1/3*	*1/2*	*1/10*	*1/2*	0
Cleaner Facilities	*1/3*	*1/2*	*1/10*	*1/2*	0

1/3 mile = 1,760 feet
1/2 mile = 2,640 feet
1/10 mile = 528 feet

Table 2
Preliminary Screen for Potential Vapor Intrusion Conditions
Typical Chemicals of Concern for the Vapor Intrusion Pathway
Check All That Apply

☐ Acenaphthene	☐ 1,2-Dibromo-3-chloropropane	☐ Methylethylketone (2-butanone)
☐ Acetaldehyde	☐ 1,2-Dibromoethane (ethylene	☐ Methylisobutylketone
☐ Acetone	☐ 1,3-Dichlorobenzene	☐ Methylmethacrylate
☐ Acetonitrile	☐ 1,2-Dichlorobenzene	☐ 2-Methylnaphthalene
☐ Acetophenone	☐ 1,4-Dichlorobenzene	☐ MTBE
☐ Acrolein	☐ Dichlorodifluoromethane	☐ m-Xylene
☐ Acrylonitrile	☐ 1,1-Dichloroethane	☐ Naphthalene
☐ Aldrin	☐ 1,2-Dichloroethane	☐ n-Butylbenzene
☐ alpha-HCH (alpha-BCH)	☐ 1,1-Dichloroethylene	☐ Nitrobenzene
☐ Benzaldehyde	☐ 1,2-Dichloropropane	☐ 2-Nitropropane
☐ Benzene	☐ 1,3-Dichloropropene	☐ N-Nitroso-di-n-butlyamine
☐ Benzo(b)fluoranthene	☐ Dieldrin	☐ n-Propylbenzene
☐ Benzylchloride	☐ Endosulfan	☐ o-Nitrotoluene
☐ beta-Chloronaphthale	☐ Epichlorohydrin	☐ o-Xylene
☐ Biphenyl	☐ Ethyl ether	☐ vp-Xylene
☐ Bis(2-chloroethyl)ether	☐ Ethylacetate	☐ Polychlorinated biphenyls (PCBs)
☐ Bis(2-chloroisopropyl)ether	☐ Ethylbenzene	☐ Pyrene
☐ Bis(chloromethyl)ether	☐ Ethylene oxide	☐ sec-Butlybenzene
☐ Bromodichloromethane	☐ Ethylmethacrylate	☐ Styrene
☐ Bromoform	☐ Fluorene	☐ tert-Butylbenzene
☐ 1,3-Butadiene	☐ Furan	☐ 1,1,1,2-Tetrachloroethane
☐ Carbon disulfide	☐ gamma-HCH (Lindane)	☐ 1,1,2,2-Tetrachloroethane
☐ Carbon tetrachloride	☐ Heptachlor	☐ Tetrachloroethylene (PCE)
☐ Chlordane	☐ Hexachloro-1,3-butadiene	☐ Toluene
☐ 2-Chloro-1,3-butadiene	☐ Hexachlorobenzene	☐ trans-1,2-Dichloroethylene
(chloroprene)	☐ Hexachlorocyclopentadiene	☐ 1,1,2-Trichloro-1,2,2-trifluoroethane
☐ Chlorobenzene	☐ Hexachloroethane	☐ 1,2,4-Trichlorobenzene
☐ 1-Chlorobutane	☐ Hexane	☐ 1,1,2-Trichloroethane
☐ Chlorodibromomethane	☐ Hydrogen cyanide	☐ 1,1,1-Trichloroethane
☐ Chlorodifluoromethane	☐ Isobutanol	☐ Trichloroethylene
☐ Chloroethane (ethyl chloride)	☐ Mercury (elemental)	☐ Trichlorofluoromethane
☐ Chloroform	☐ Methylacrylonitrile	☐ 1,2,3-Trichloropropane
☐ 2-Chlorophenol	☐ Methoxychlor	☐ 1,2,4-Trimethylbenzene
☐ 2-Chloropropane	☐ Methyl acetate	☐ 1,3,5-Trimethylbenzene
☐ Chrysene	☐ Methyl acrylate	☐ Vinyl acetate
☐ cis-1,2-Dichloroethylene	☐ Methyl bromide	☐ Vinyl chloride (chloroethene)
☐ Crotonaldehyde (2-butenal)	☐ Methyl chloride (chloromethane)	
☐ Cumene	☐ Methylcyclohexane	Petroleum Hydrocarbons:
☐ DDE	☐ Methylene bromide	☐ Gasoline/BTEX/MtBE
☐ Dibenzofuran	☐ Methylene chloride	☐ Diesel

APPENDIX F

EDR® Environmental Lien Search Report

The EDR Environmental LienSearch™ Report

HOLLY SUGAR SPORTS PARK
SAN JOAQUIN COUNTY
TRACY, CA 95304

Project Number 02410057.7

February 4, 2009

EDR® Environmental Data Resources Inc

NCO℠

The Standard in Environmental Risk Information

440 Wheelers Farm Road
Milford, Connecticut 06461

Nationwide Customer Service

Telephone: 1-800-352-0050
Fax: 1-800-231-6802
Internet: www.edrnet.com

EDR Environmental LienSearch™ Report

The EDR Environmental LienSearch Report includes results from a search of available current land title records for environmental cleanup liens and other activity and use limitations, such as engineering controls and institutional controls.

A network of professional, trained researchers follows established procedures to:

- search for parcel information, legal description, and ownership based on client supplied address information;
- research indexes and title repositories;
- obtain a copy of the deed;
- search for environmental encumbering instrument(s) associated with the deed;
- provide a copy of any environmental encumbrance(s) based upon a review of key words in the instrument (title, parties involved, and description); and
- provide a copy of the deed.

Thank you for your business.
Please contact EDR at 1-800-352-0050
with any questions or comments.

Disclaimer - Copyright and Trademark Notice

This report was prepared for the use of Environmental Data Resources, Inc., and NCO Financial Services, Inc. exclusively. This report is neither a guarantee of title, a commitment to insure, nor a policy of title insurance. **NO WARRANTY, EXPRESSED OR IMPLIED, IS MADE WHATSOEVER IN CONNECTION WTH THIS REPORT**. Environmental Data Resources, Inc. (EDR) and NCO Financial Services, Inc. specifically disclaim the making of any such warranties, including without limitation, merchantability or fitness for a particular use or purpose. The information contained in this report is retrieved as it is recorded from the various agencies that make it available. The total liability is limited to the fee paid for this report.

Copyright 2006 by Environmental Data Resources, Inc. All rights reserved. Reproduction in any media or format, in whole or in part, of any report or map of Environmental Data Resources, Inc., or its affiliates, is prohibited without prior written permission.

EDR and its logos are trademarks of Environmental Data Resources, Inc. or its affiliates. All other trademarks used herein are the property of their respective owners.

EDR Environmental LienSearch™ Report

TARGET PROPERTY INFORMATION

ADDRESS

HOLLY SUGAR SPORTS PARK
CORRAL HOLLOW ROAD
TRACY, CA 95304

RESEARCH SOURCE

Sources: San Joaquin County

DEED INFORMATION

Type of Deed: WD ☐ QCD ☐ Other ☒ DEED

Title is vested in: City of Tracy

Title received from: Holly Sugar Corporation

Deed Dated: July 8, 2003
Deed Recorded: July 11, 2003
Document No.: 2003-152930

LEGAL DESCRIPTION

Description: Legal attached as Exhibit "A"

Assessor's Parcel Number: 212-150-01

ENVIRONMENTAL LIEN

Environmental Lien: Found ☐ Not Found ☒

If yes:

1st Party:

2nd Party:

Dated:
Recorded:
Book:
Page:
Comments:

OTHER ACTIVITY AND USE LIMITATIONS (AULs)

Other AUL's: Found ☐ Not Found ☒

EDR Environmental LienSearch™ Report

EXHIBIT A

EXHIBIT A

Documents provided by DataTree LLC via it's proprietary imaging and delivery system. Copyright 2003, All rights reserved.

(27)

RECORDING REQUESTED BY

CENTRAL VALLEY TITLE COMPANY

Escrow Number: 1002-5535-ST

AND WHEN RECORDED MAIL TO

CITY OF TRACY
520 TRACY BLVD.
TRACY, CA 95376

DOC # 2003-152930
07/11/2003 07:45A Fee:NC
Page 1 of 5 Doc T Tax Paid
Recorded in Official Records
County of San Joaquin
GARY W. FREEMAN
Assessor-Recorder-County Clerk
Paid by CENTRAL VALLEY TITLE CO

SPACE ABOVE THIS LINE FOR RECORDER'S USE

GRANT DEED

The undersigned grantor(s) declare(s):
Documentary transfer tax is $6,320.60 City Transfer Tax: $0.00
(X) computed on full value of property conveyed, or
() computed on full value less value of liens and encumbrances remaining at time of sale.

FOR A VALUABLE CONSIDERATION, receipt of which is hereby acknowledged, **HOLLY SUGAR CORPORATION**

Hereby GRANT(S) to **CITY OF TRACY**

THE LAND DESCRIBED HEREIN IS SITUATED IN THE STATE OF CALIFORNIA, COUNTY OF SAN JOAQUIN, UNINCORPORATED AREA, AND IS DESCRIBED AS FOLLOWS:

PARCEL ONE:

ALL THAT CERTAIN REAL PROPERTY BEING ALL OF BLOCKS 1, 9, 10, 11, 12, 13 AND 14, AND PORTIONS OF BLOCKS, 2, 8, AND 15 AS SHOWN ON THE MAP OF TRACY GARDEN FARMS FILED FOR RECORD IN BOOK OF MAPS AND PLATS, VOLUME 8, PAGE 1, SAN JOAQUIN COUNTY RECORDS, AND ADJOINING LANDS LYING WITHIN RANCHO EL PESCADERO, COUNTY OF SAN JOAQUIN, STATE OF CALIFORNIA, BEING MORE PARTICULARLY DESCRIBED AS FOLLOWS:

BEGINNING AT THE SOUTHWEST CORNER OF LOT 4 OF SAID BLOCK 2, SAID POINT BEING A POINT IN THE CENTERLINE OF HOLLY DRIVE, A COUNTY ROAD; THENCE ALONG THE SOUTHERLY LINE OF THE 935.43 ACRE PARCEL AS SHOWN ON THE RECORD OF SURVEY FILED IN BOOK 4 OF SURVEYS AT PAGE 53, SAN JOAQUIN COUNTY RECORDS THE FOLLOWING FIFTEEN (15) COURSES:

1) ALONG THE SOUTHERLY LINE OF LOTS 2, 3, 4 AND 6 OF SAID BLOCK 8, SOUTH 89 DEGREES 52 MINUTES 00 SECONDS WEST 2320.66 FEET;
2) LEAVING LAST SAID SOUTHERLY LINE OF CROSSING LOT 7 IN SAID BLOCK 8, SOUTH 41 DEGREES 13 MINUTES 27 SECONDS WEST 339.29 FEET;
3) NORTH 89 DEGREES 53 MINUTES 56 SECONDS WEST 74.03 FEET TO A POINT IN THE CENTERLINE OF TRACY BOULEVARD;
4) NORTH 89 DEGREES 53 MINUTES 56 SECONDS WEST 98.04 FEET;
5) SOUTH 65 DEGREES 54 MINUTES 12 SECONDS WEST 499.34 FEET;
6) SOUTH 50 DEGREES 03 MINUTES 24 SECONDS WEST 505.41 FEET;
7) NORTH 89 DEGREES 25 MINUTES 36 SECONDS WEST 715.42 FEET;
8) SOUTH 86 DEGREES 54 MINUTES 00 SECONDS WEST 390.26 FEET;
9) SOUTH 82 DEGREES 16 MINUTES 10 SECONDS WEST 1193.25 FEET;
10) NORTH 82 DEGREES 56 MINUTES 05 SECONDS WEST 500.20 FEET;

MAIL TAX STATEMENTS TO PARTY SHOWN ON FOLLOWING LINE; IF NO PARTY SHOWN, MAIL AS DIRECTED ABOVE

SAME AS ABOVE

Name	Street Address	City & State

Documents provided by DataTrace LLC via its proprietary imaging and delivery system. Copyright 2003, All rights reserved.

11) NORTH 65 DEGREES 04 MINUTES 43 SECONDS WEST 500.09 FEET;
12) SOUTH 87 DEGREES 40 MINUTES 49 SECONDS WEST 494.99 FEET;
13) NORTH 80 DEGREES 17 MINUTES 21 SECONDS WEST 248.72 FEET;
14) NORTH 80 DEGREES 17 MINUTES 21 SECONDS WEST 136.33 FEET AND
15) NORTH 88 DEGREES 34 MINUTES 15 SECONDS WEST 227.13 FEET TO A POINT IN THE WEST LINE OF SAID BLOCK 15, ALSO BEING A POINT IN THE CENTERLINE OF CORRAL HOLLOW ROAD;

THENCE ALONG THE WEST LINE OF SAID BLOCKS 15, 14 13, AND 12, NORTH 00 DEGREES 13 MINUTES 45 SECONDS WEST 5872.17 FEET TO THE NORTHWEST CORNER OF SAID BLOCK 12; THENCE ALONG THE NORTH LINE OF SAID BLOCK 12 NORTH 89 DEGREES 51 MINUTES 39 SECONDS EAST 5281.01 FEET TO THE NORTHEAST CORNER OF SAID BLOCK 12, SAID POINT ALSO BEING A POINT IN THE CENTERLINE OF TRACY BOULEVARD; THENCE ALONG THE CENTERLINE OF SAID TRACY BOULEVARD NORTH 00 DEGREES 13 MINUTES 56 SECONDS WEST 612.20 FEET TO THE NORTHWEST CORNER OF PARCEL 10 AS SHOWN ON THE MAP OF SURVEY FILED FOR RECORD IN BOOK OF SURVEYS, VOLUME 5. PAGE 213, SAN JOAQUIN COUNTY RECORDS; THENCE ALONG THE NORTH LINE OF SAID PARCEL 10 NORTH 89 DEGREES 51 MINUTES 25 SECONDS EAST 4157.80 FEET TO THE NORTHEAST CORNER OF SAID PARCEL 10, SAID POINT ALSO BEING THE SOUTHEAST CORNER OF PARCEL 9 OF SAID SURVEY AND A POINT IN THE WESTERLY LINE OF SAID 935.43 ACRE PARCEL; THENCE ALONG THE EASTERLY LINE OF SAID PARCEL 9 NORTH 01 DEGREES 48 MINUTES 12 SECONDS WEST 686.96 FEET; THENCE LEAVING SAID EASTERLY LINE AND CONTINUING NORTH 01 DEGREES 48 MINUTES 12 SECONDS WEST 702.65 FEET TO A POINT IN THE NORTHERLY LINE OF SAID 935.53 ACRE PARCEL; THENCE ALONG SAID NORTHERLY LINE NORTH 88 DEGREES 17 MINUTES 00 SECONDS EAST 228.78 FEET TO THE WEST LINE OF A DREDGER CUT; THENCE ALONG SAID WEST LINE OF A DREDGER CUT NORTH 14 DEGREES 28 MINUTES 30 SECONDS WEST 644.28 FEET, MORE OR LESS TO A POINT IN THE NORTH LINE OF SAID PARCEL 9; THENCE ALONG SAID NORTH LINE SOUTH 89 DEGREES 56 MINUTES 00 SECOND EAST 378.55 FEET TO THE NORTHEAST CORNER OF SAID PARCEL 9; THENCE ALONG THE EASTERLY LINE OF SAID PARCEL 9 AND THE EASTERLY LINE OF SAID 935.43 ACRE PARCEL, ALSO BEING THE EASTERLY LINE OF SAID BLOCKS 1 AND 2, SOUTH 00 DEGREES 14 MINUTES 26 SECONDS EAST 7,772.01 FEET TO A POINT IN THE CENTERLINE OF ARBOR ROAD AS GRANTED TO THE COUNTY OF SAN JOAQUIN BY THE DOCUMENT RECORDED IN BOOK OF OFFICIAL RECORDS, VOLUME 408, PAGE 79 SAN JOAQUIN COUNTY RECORDS; THENCE ALONG SAID CENTERLINE SOUTH 89 DEGREES 52 MINUTES 44 SECONDS WEST 416.21 FEET TO A POINT IN THE EASTERLY LINE OF "SUGAR SPUR" A RAILROAD SPUR LINE MORE PARTICULARLY DESCRIBED IN THE DOCUMENT RECORDED IN BOOK 14 OF DEEDS, VOLUME 383, PAGE 192, SAN JOAQUIN COUNTY RECORDS; THENCE ALONG SAID EASTERLY LINE SOUTH 13 DEGREES 04 MINUTES 54 SECONDS EAST 144.58 FEET TO A POINT IN THE SOUTHERLY LINE OF SAID BLOCK 2; THENCE ALONG SAID SOUTHERLY LINE SOUTH 89 DEGREES 52 MINUTES 00 SECONDS WEST 1566.20 FEET TO THE POINT OF BEGINNING.

EXECPTING THEREFROM THE 91.720 ACRE PARCEL DESCRIBED IN THE LOT LINE ADJUSTMENT FILED FOR RECORD IN DOCUMENT NO. 2006-053869, OFFICIAL RECORDS, COUNTY OF SAN JOAQUIN, STATE OF CALIFORNIA, SAID 91.720 ACRE PARCEL BEING MORE PARTICULARLY DESCRIBED AS FOLLOWS:

ALL THAT CERTAIN REAL PROPERTY BEING A PORTION OF BLOCKS 1, 9 AND 10, AS SHOWN ON THAT CERTAIN MAP ENTITLED "TRACY GARDEN FARMS" FILED THE 2ND DAY OF OCTOBER, 1913 IN BOOK 8 OF MAPS AND PLATS, AT PAGE 1. SAN JOAQUIN COUNTY RECORDS, BEING MORE PARTICULARLY DESCRIBED AS FOLLOWS:

BEGINNING AT A POINT IN THE WEST LINE OF SAID BLOCK BLOCK 1, ALSO BEING THE CENTER LINE OF HOLLY DRIVE, SAID POINT BEARING NORTH 00 DEGREES 14 MINUTES 47 SECONDS WEST 594.29 FEET FROM THE SOUTHWEST CORNERG OF SAID BLOCK 1 AS SHOWN ON THE MAP FILED FOR RECORD IN BOOK 34 OF SURVEYS AT PAGE 37, SAN JOAQUIN COUNTY RECORDS, THENCE NORTH 89 DEGREES 51 MINUTES 16 SECONDS EAST 736.43 FEET; THENCE NORTH 00 DEGREES 14 MINUTES 26 SECONDS WEST 418.20 FEET; THENCE NORTH 89 DEGREES 45 MINUTES 34 SECONDS EAST 1,214.03 FEET, TO A POINT IN THE EAST LINE OF SAID BLOCK 1, SAID POINT BEARING NORTH 00 DEGREES 14 MINUTES 26 SECONDS WEST 2194.69 FEET FROM THE INTERSECTION OF THE CENTERLINE OF ARBOR AVENUE WITH THE EAST LINE OF BLOCK 2 OF SAID "TRACY GARDEN FARMS"; THENCE ALONG SAID EAST LINE, NORTH 00 DEGREES 14 MINUTES 26 SECONDS WEST 1,626.62 FEET; THENCE SOUTH 89 DEGREES 51 MINUTES 21 SECONDS WEST 2,200.66 FEET;

MAIL TAX STATEMENTS TO PARTY SHOWN ON FOLLOWING LINE; IF NO PARTY SHOWN, MAIL AS DIRECTED ABOVE

SAME AS ABOVE

Name	Street Address	City & State

Documents provided by DataTree LLC via it's proprietary imaging and delivery system. Copyright 2003, All rights reserved.

THENCE SOUTH 00 DEGREES 14 MINUTES 47 SECONDS EAST 2,046.89 FEET; THENCE NORTH 89 DEGREES 51 MINUTES 16 SECONDS EAST 250.00 FEET TO THE POINT OF BEGINNING.

ALSO EXCEPTING THEREFROM THE 72.935 ACRE PARCEL DESCRIBED IN THE LOT LINE ADJUSTMENT FILED FOR RECORD IN DOCUMENT NO. 2003-053869, OFFICIAL RECORDS, COUNTY OF SAN JOAQUIN, STATE OF CALIFORNIA, SAID 72.935 ACRE PARCEL BEING MORE PARTICULARLY DESCRIBED AS FOLLOWS:

ALL THAT CERTAIN REAL PROPERTY BEING A PORTION OF BLOCKS 1 AND 2, AS SHOWN ON THAT CERTAIN MAP ENTITLED "TRACY GARDEN FARMS", FILED THE 2ND DAY OF OCTOBER, 1913 IN BOOK 8 OF MAPS AND PLATS, AT PAGE 1, SAN JOAQUIN COUNTY RECORDS, BEING MORE PARTICULARLY DESCRIBED AS FOLLOWS:

BEGINNING AT THE POINT OF INTERSECTION OF THE CENTER LINE OF ARBOR AVENUE WITH THE EAST LINE OF SAID LOT 7, BLOCK 2, SAID POINT ALSO BEING THE SOUTHEAST CORNER OF THE 87.408 ACRE PARCEL AS SHOWN ON THE MAP FILED FOR RECORD IN BOOK 34 OF SURVEYS, PAGE 37, SAN JOAQUIN COUNTY RECORDS, THENCE ALONG THE CENTER LINE OF ARBOR AVE, SOUTH 89 DEGREES 52 MINUTES 44 SECONDS WEST 1,207.54 FEET; THENCE LEAVING SAID CENTER LINE NORTH 27 DEGREES 20 MINUTES 40 SECONDS EAST 85.93 FEET; THENCE NORTH 00 DEGREES 14 MINUTES 26 SECONDS WEST 671.50 FEET; THENCE SOUTH 89 DEGREES 45 MINUTES 34 SECONDS WEST 189.20 FEET; THENCE NORTH 00 DEGREES 14 MINUTES 26 SECONDS WEST 352.08 FEET; THENCE SOUTH 89 DEGREES 45 MINUTES 34 SECONDS WEST 593.45 FEET TO A POINT IN THE WEST LINE OF SAID BLOCK 2, ALSO BEING THE CENTER LINE OF HOLLY DRIVE; THENCE ALONG THE SAID WEST LINE, NORTH 00 DEGREES 14 MINUTES 47 SECONDS WEST 675.45 FEET TO A POINT THAT BEARS SOUTH 00 DEGREES 14 MINUTES 47 SECONDS EAST 66.00 FEET FROM THE NORTHWEST CORNER OF SAID 87.408 ACRE PARCEL; THENCE NORTH 89 DEGREES 51 MINUTES 16 SECONDS EAST 736.43 FEET; THENCE NORTH 00 DEGREES 14 MINUTES 26 SECONDS WEST 418.20 FEET; THENCE NORTH 89 DEGREES 45 MINUTES 34 SECONDS EAST 1,214.03 FEET TO A POINT IN THE EAST LINE OF SAID BLOCK 1 THAT BEARS NORTH 00 DEGREES 14 MINUTES 26 SECONDS WEST 2194.69 FEET FROM THE POINT OF INTERSECTION OF THE EAST LINE OF SAID BLOCK 2 WITH THE CENTERLINE OF SAID ARBOR AVENUE; THENCE ALONG THE EAST LINE OF SAID BLOCKS 1 AND 2, SOUTH 00 DEGREES 14 MINUTES 26 SECONDS EAST 2.194.69 FEET TO THE POINT OF BEGINNING.

RESERVING THEREFROM A THIRTY-THREE (33) FOOT WIDE RAIL SPUR EXCLUSIVE EASEMENT CROSSING THE 23.201 ACRE PARCEL AS SHOWN ON THE RECORD OF SURVEY MAP FILED FOR RECORD IN BOOK 35 OF SURVEYS AT PAGE 78, SAN JOAQUIN COUNTY RECORDS, COUNTY OF SAN JOAQUIN, STATE OF CALIFORNIA, THE NORTHERLY AND SOUTHERLY ENDS OF SAID THIRTY-THREE (33') FOOT WIDE EASEMENT BEING THE NORTHERLY AND SOUTHERLY BOUNDARIES AT THE SOUTHEASTERLY CORNER OF SAID 23.201 ACRE PARCEL AND THE EASTERLY LINE OF SAID THIRTY-THREE (33') FOOT WIDE EASEMENT BEING MORE PARTICUARLY DESCRIBED AS FOLLOWS:

BEGINNING AT THE MOST SOUTHEASTERLY CORNER OF SAID 23.201 ACRE PARCEL; THENCE NORTH 13 DEGREES 04 MINUTES 54 SECONDS WEST 144.58 FEET ALONG THE EASTERLY LINE OF SAID 23.201 ACRE PARCEL TO THE POINT OF TERMINATION OF THE EASTERLY LINE OF SAID THIRTY-THREE (33') FOOT WIDE EASEMENT FEET.

RESERVING THEREFROM A TEN (10) FOOT WIDE EXCLUSIVE WATER UTILITY EASEMENT CROSSING THE 23.201 ACRE PARCEL AS SHOWN ON THE RECORD OF SURVEY MAP FILED FOR RECORD IN BOOK 35 OF SURVEYS AT PAGE 78, SAN JOAQUIN COUNTY RECORDS, COUNTY OF SAN JOAQUIN, STATE OF CALIFORNIA, THE CENTERLINE OF SAID EASEMENT BEING MORE PARTICULARY DESCRIBED AS FOLLOWS:

BEGINNING AT THE INTERSECTION OF THE NORTH RIGHT-OF-WAY LINE OF ARBOR ROAD AND THE EAST RIGHT-OF-WAY LINE OF HOLLY ROAD, AS SHOWN ON SAID RECORD OF SURVEY MAP; THENCE NORTH 36 DEGREES 43 MINUTES 30 SECONDS EAST 41.92 FEET; THENCE NORTH 89 DEGREES 45 MINUTES 13 SECONDS EAST 440.00 FEET; THENCE NORTH 00 DEGREES 14 MINUTES 47 SECONDS WEST 70.00 FEET; THENCE NORTH 89 DEGREES 45 MINUTES 13 SECONDS EAST 190.00 FEET; THENCE NORTH 00 DEGREES 14 MINUTES 47 SECONDS WEST 70.00 FEET; THENCE NORTH 89 DEGREES 45 MINUTES 34 SECONDS EAST 102.35

MAIL TAX STATEMENTS TO PARTY SHOWN ON FOLLOWING LINE; IF NO PARTY SHOWN, MAIL AS DIRECTED ABOVE

SAME AS ABOVE

Name	Street Address	City & State

Documents provided by DataTree LLC via it's proprietary imaging and delivery system. Copyright 2003, All rights reserved.

FEET TO A POINT ON THE EAST BOUNDARY LINE OF SAID 23.201 ACRE PARCEL; SAID POINT BEING THE POINT OF TERMINATION OF THE HEREIN DESCRIBED CENTERLINE OF SAID WATER UTILITY EASEMENT.

A.P.N. 212-160-01, 212-130-12, 212-130-14, 212-140-06, 212-140-07, 215-150-01, 212-200-01 AND A PORTION OF 212-230-01 AND A PORTION OF 212-160-03 AND A PORTION OF 212-160-02

PARCEL TWO:

TOGETHER WITH AND RESERVING THEREFROM A THIRTY (30) FOOT WIDE EXCLUSIVE ACCESS EASEMENT ALONG THE COMMON BOUNDARY LINE OF THE 23.201 ACRE PARCEL AND 72.935 ACRE PARCEL AS SHOWN ON THE RECORD OF SURVEY MAP FILED FOR RECORD IN BOOK 35 OF SURVEYS AT PAGE 78, SAN JOAQUIN COUNTY RECORDS, COUNTY OF SAN JOAQUIN, STATE OF CALIFORNIA, THE CENTERLINE OF SAID EASEMENT BEING MORE PARTICULARLY DESCRIBED AS FOLLOWS:

COMMENCING AT THE NORTHWESTERLY CORNER OF SAID 23.201 ACRE PARCEL, SAID CORNER LYING ON THE CENTERLINE OF HOLLY ROAD AS SHOWN ON SAID RECORD OF SURVEY MAP; THENCE ALONG THE NORTHERLY LINE OF SAID 23.201 ACRE PARCEL NORTH 89 DEGREES 45 MINUTES 34 SECONDS EAST 20.00 FEET TO A POINT ON THE EASTERLY RIGHT-OF-WAY OF SAID HOLLY DRIVE, SAID POINT BEING THE TRUE POINT OF BEGINNING; THENCE NORTH 89 DEGREES 45 MINUTES 34 SECONDS EAST 573.45 FEET, ALONG SAID NORTHERLY LINE, TO THE NORTHEAST CORNER OF SAID 23.201 ACRE PARCEL; THENCE SOUTH 00 DEGREES 14 MINUTES 26 SECONDS EAST 211.63 FEET TO A POINT; SAID POINT BEING THE POINT OF TERMINATION OF THE HEREIN DESCRIBED CENTERLINE OF SAID EASEMENT.

Dated: July 08, 2003

STATE OF ~~CALIFORNIA~~ TEXAS
COUNTY OF FORT BEND

On 7/9/03 before me, SUSAN DiMUCCI
personally appeared
W. F. SCHWER

personally known to me (or proved to me on the basis of satisfactory evidence) to be the person(s) whose name(s) is/are subscribed to the within instrument an acknowledged to me that he/she/they executed the same in his/her/their authorized capacity(ies), and that by his/her/their signature(s) on the instrument the person(s), or the entity upon behalf of which the person(s) acted, executed the instrument

WITNESS my hand and official seal.

Signature: Susan Di Mucci
Commission Expiration Date: 5-31-2007

SUSAN DIMUCCI
MY COMMISSION EXPIRES
May 31, 2007

HOLLY SUGAR CORPORATION
By: W. F. Schwer

W.F. Schwer
Sr. Vice President

MAIL TAX STATEMENTS TO PARTY SHOWN ON FOLLOWING LINE; IF NO PARTY SHOWN, MAIL AS DIRECTED ABOVE

SAME AS ABOVE

Name | Street Address | City & State

Documents provided by DataTree LLC via its proprietary imaging and delivery system. Copyright 2003, All rights reserved.

RESOLUTION 2003-129

APPROVE PURCHASE OF THE HOLLY SUGAR RANCH FROM THE HOLLY SUGAR CORPORATION FOR THE PURCHASE PRICE OF $5,745,696, AUTHORIZE SUPPLEMENTAL APPROPRIATIONS OF $5,845,696 FROM VARIOUS FUNDS, AND AUTHORIZE THE MAYOR TO EXECUTE THE PURCHASE AGREEMENT

WHEREAS, The Holly Sugar Ranch property is for sale and staff proposes purchase by the City, and

WHEREAS, Tracy Municipal Code section 2.20.090 requires that the acquisition of real property be in accordance with state law, and

WHEREAS, The City of Tracy has complied with the requirements of Government Code sections 7267 and following, and

WHEREAS, Government Code Section 65402 requires a report from the Planning Commission regarding general plan conformance before a public agency acquires real property, and

WHEREAS, No land use change is proposed as part of this real property acquisition, and

WHEREAS, On Wednesday, April 9th, the Planning Commission voted 3-2 that the proposed real property acquisition was not consistent with the City's general plan, and

WHEREAS, Tracy Municipal Code section 2.20.080 requires City Council approval of this proposed acquisition, and

WHEREAS, The property that is for sale consists of 1,197.02 acres with approximately 820 acres useable for agricultural production, and

WHEREAS, A study prepared by CH2M Hill has shown that the site could be used for future treatment of wastewater, and

WHEREAS, The property could also be used for disposal of a limited amount of treated effluent generated from development, and

WHEREAS, As funds for this purchase were not budgeted in Fiscal Year 2002-03, and supplemental appropriations are required to CIP 7448, and

WHEREAS, There is no fiscal impact to the General Fund, and

WHEREAS, Because the City has not yet initiated an application to convert the property's use from farming to wastewater application, the property acquisition is not a "project" subject to the California Environmental Quality Act as defined by Public Resources Code section 21065;

Documents provided by DataTrac LLC via it's proprietary imaging and delivery system. Copyright 2003. All rights reserved.

NOW, THEREFORE, BE IT RESOLVED That the City Council hereby approves the purchase of the Holly Sugar Ranch from the Holly Sugar Corporation for the purchase price of $5,745,696; authorizes supplemental appropriations to CIP 7448 from Wastewater Fund (Fund 521) $5,015,607; I-205 Area (Fund 353) $216,291; Plan C (Fund 325) $309,822; Northeast Industrial Area (Fund 351) $233,828; South MacArthur Area (Fund 352) $35,074; Presidio Area (Fund 355) $35,074; and authorizes the Mayor to execute the purchase agreement.

* * * * * * * * * * *

The foregoing Resolution 2003-129 was passed and adopted by the Tracy City Council on the 15th day of April, 2003, by the following vote:

AYES: COUNCIL MEMBERS: HUFFMAN, TOLBERT, TUCKER, BILBREY
NOES: COUNCIL MEMBERS: NONE
ABSENT: COUNCIL MEMBERS: IVES
ABSTAIN: COUNCIL MEMBERS: NONE

MAYOR

ATTEST:

CITY CLERK

03-040703kl
PW

2003-152938
07/11/2003 07:45A
6 of 6

THE FOREGOING DOCUMENT IS CERTIFIED TO BE A CORRECT COPY OF THE ORIGINAL ON FILE IN THIS OFFICE.
GLORIA J. SCHMIDT
CITY CLERK, CITY OF TRACY
BY:
DATE: 7/10/03

Water Supply Assessment for the Holly Sugar Sports Park

Draft Report

Prepared for
City of Tracy

Prepared by
West Yost Associates

May 2009

DRAFT

TABLE OF CONTENTS

EXECUTIVE SUMMARY **1**

INTRODUCTION **2**

LEGAL REQUIREMENT FOR WATER SUPPLY ASSESSMENT 2
NEED FOR AND PURPOSE OF WATER SUPPLY ASSESSMENT 2
WATER SUPPLY ASSESSMENT FORMAT AND ORGANIZATION 2
ACRONYMS AND ABBREVIATIONS USED IN THIS WATER SUPPLY ASSESSMENT 3

DESCRIPTION OF PROPOSED PROJECT **5**

PROJECT LOCATION 5
CURRENT LAND USES 5
PROPOSED LAND USES AND ACREAGES 6
PROJECTED WATER DEMAND 6
Water Use Factors and Assumptions 6
Projected Water Demand 9
Comparison with Existing Water Uses at the Project Site and Water Demand Calculations in the City's Urban Water Management Plan 9

REQUIRED DETERMINATIONS **12**

DOES SB 610 APPLY TO THE PROPOSED PROJECT? 12
WHO IS THE IDENTIFIED PUBLIC WATER SYSTEM? 12
DOES THE CITY HAVE AN ADOPTED URBAN WATER MANAGEMENT PLAN (UWMP) AND DOES THE UWMP INCLUDE THE PROJECTED WATER DEMAND FOR THE PROPOSED PROJECT? 13

CITY OF TRACY WATER SERVICE AREA **14**

WATER SERVICE AREA 14
POPULATION 14
CLIMATE 15

CITY OF TRACY WATER DEMANDS **16**

HISTORICAL AND EXISTING POTABLE WATER DEMAND 16
ADDITIONAL (FUTURE) POTABLE WATER DEMAND 16
DRY YEAR POTABLE WATER DEMAND 19
ADDITIONAL (FUTURE) NON-POTABLE WATER DEMAND 19

CITY OF TRACY WATER SUPPLIES **21**

EXISTING POTABLE WATER SUPPLIES 22
Central Valley Project Water via the Delta-Mendota Canal 22
Stanislaus River Water 24

DRAFT

Groundwater 24
Groundwater Overview.....25
Basin Description.....25
Groundwater Level Trends 27
Groundwater Storage 27
Groundwater Yield.....27
Groundwater Quality 28
Groundwater Management.....29
Groundwater Management Plan for the Northern Agencies in the Delta-Mendota Canal Service Area and a Portion of San Joaquin County..... 29
San Joaquin County Groundwater Export Ordinance..... 30
City Groundwater Management Policy and Mitigated Negative Declaration 30
Tracy Regional Groundwater Management Plan (Regional City GMP) 31
Historical Groundwater Use 32
Projected Future Groundwater Use.....33
Groundwater Sufficiency 34
Out-of-Basin Water Banking (Pilot Agreement) 35
ADDITIONAL (FUTURE) POTABLE WATER SUPPLIES 36
Out-of-Basin Water Banking (Permanent Agreement).....36
Additional Central Valley Project Water via the Delta-Mendota Canal.....37
Additional CVP Supplies from WSID.....37
Additional CVP Supplies from BBID.....37
Surface Water from BBID Pre-1914 Water Rights 37
Aquifer Storage and Recovery.....38
ADDITIONAL (FUTURE) NON-POTABLE WATER SUPPLIES 39
Diversion of Non-Potable Surface Water from Sugar Cut 39
Shallow Non-Potable Groundwater 40
Recycled Water.....42
SUMMARY OF EXISTING AND ADDITIONAL POTABLE AND NON-POTABLE WATER SUPPLIES 43
WATER SUPPLY RELIABILITY.....45
Potable Water Supply Reliability.....45
Non-Potable Water Supply Reliability 46
Normal Years.....48
Single Dry Years.....51
Multiple Dry Years 53
Extreme Dry Years 55
DETERMINATION OF WATER SUPPLY SUFFICIENCY.....57
FINDINGS.....57
Normal Years.....57
Dry Years: 2007 Conditions 59
Dry Years: 2030 Conditions 61
Out-of-Basin Water Banking (Permanent Agreement).....63
Additional Central Valley Project Water via the Delta-Mendota Canal.....63
Surface Water from BBID Pre-1914 Water Rights 64

DRAFT

Aquifer Storage and Recovery 65
Diversion of Non-Potable Surface Water from Sugar Cut 65
Recycled Water 66

WATER SUPPLY ASSESSMENT APPROVAL PROCESS 67

REFERENCES 68

LIST OF APPENDICES

APPENDIX A. Existing City of Tracy Water Supply Agreements

- Contract between the City of Tracy and USBR for Central Valley Project (CVP) Water Supplies
- Agreement for Assignment of Central Valley Project (CVP) Water Supplies between City of Tracy and Banta Carbona Irrigation District (BCID)
- Agreement for Assignment of Central Valley Project (CVP) Water Supplies between City of Tracy and West Side Irrigation District (WSID)
- Agreement between City of Tracy and Plain View Water District (PVWD) for Central Valley Project (CVP) Supplies for Patterson Pass Business Park
- Agreement between City of Tracy and South San Joaquin Irrigation District (SSJID) for Water Supply
- Pilot Agreement between City of Tracy and Semitropic Water Storage District

APPENDIX B. City of Tracy Capital Improvement Program for Water Improvements (FY 2008/09 through FY 2012/13)

APPENDIX C. Groundwater Documentation

- DWR Bulletin 118 Description of San Joaquin Valley Groundwater Basin-Tracy Sub-basin
- City of Tracy Groundwater Management Policy Mitigated Negative Declaration (Including 2001 Estimated Groundwater Yield Study)
- Excerpts of Groundwater Management Plan for the Northern Agencies in the Delta-Mendota Canal Service Area and a Portion of San Joaquin County
- Excerpts of Summary of Groundwater Conditions November 2007 through November 2008
- Excerpts of Tracy Regional Groundwater Management Plan

APPENDIX D. City of Tracy Recycled and Non-Potable Water Use Ordinance

DRAFT

LIST OF TABLES

Table 1. Summary of Proposed Project Land Uses for Holly Sugar Sports Park.....7
Table 2. Estimated Potable Water Use Factors for the Holly Sugar Sports Park 8
Table 3. Estimated Non-Potable Water Use Factors for the Holly Sugar Sports Park.....8
Table 4. Estimated Potable and Non-Potable Water Demands for the Proposed Project.....10
Table 5. Recent Potable Water Use at Holly Sugar Facility.....11
Table 6. Historical and Projected Service Area Population.....15
Table 7. City of Tracy Climate Data.....15
Table 8. Historical Potable Water Demand 16
Table 9. Projected Future Potable Water Demand.....17
Table 10. City of Tracy Projected Future Potable Water Demand by Development Stage.....18
Table 11. Projected Future Dry Year Potable Water Demand.....19
Table 12. City of Tracy Historical Groundwater Production 33
Table 13. City of Tracy Projected Future Groundwater Production in Normal Years.....34
Table 14. Summary of City of Tracy Existing and Additional Water Supplies 43
Table 15. Quantity of Historical Water Deliveries and Existing and Additional Potable and Non-Potable Water Supplies in Normal Years 44
Table 16. Water Supply Reliability in Normal, Single Dry, Multiple Dry and Extreme Dry Years.....47
Table 17. Projected Existing and Additional Water Supplies Available in Normal Years 50
Table 18. Projected Existing and Additional Water Supplies Available in Single Dry Years.....52
Table 19. Projected Existing and Additional Water Supplies Available in Multiple Dry Years.....54
Table 20. Projected Existing and Additional Water Supplies Available in Extreme Dry Years.....56
Table 21. Projected Existing and Additional Water Supplies Available in Normal Years vs. Demand.....58
Table 22. Existing (2007) and Additional Dry Year Water Supply vs. Demand 60
Table 23. Existing and Additional Year 2030 Dry Year Water Supply vs. Demand 62

DRAFT

LIST OF FIGURES

Figure 1. City of Tracy Sphere of Influence 69
Figure 2. Project Site Map 70
Figure 3. Conceptual Design for the Holly Sugar Sports Park 71
Figure 4. City of Tracy Historical Potable Water Demand 72
Figure 5. City of Tracy Historical and Projected Future Potable Water Demand 73
Figure 6. City of Tracy Projected Future Water Demand by Development Stage 74
Figure 7. City of Tracy Historical Potable Water Supplies 75
Figure 8. Groundwater Basin and Well Locations 76
Figure 9. City of Tracy Existing and Additional Potable Water Supply vs. Demand in Normal Years 77
Figure 10. City of Tracy Existing and Additional Potable Water Supply vs. Demand in a Single Dry Year 78
Figure 11. City of Tracy Existing and Additional Potable Water Supply vs. Demand in Multiple Dry Years 79
Figure 12. City of Tracy Existing and Additional Potable Water Supply vs. Demand in an Extreme Dry Year 80
Figure 13. City of Tracy 2007 Potable Water Supplies vs. Demand with Planned Future Uses and Proposed Project 81
Figure 14. City of Tracy Existing and Additional Potable Water Supplies at Year 2030 vs. Future Demand 82

DRAFT

EXECUTIVE SUMMARY

Development of the City of Tracy's proposed Holly Sugar Sports Park (Proposed Project) will include the development of up to 298 acres of land in the northern part of the City on property currently owned by the City (previously owned by the Holly Sugar Company). The Proposed Project will include development of a 166-acre Active Sports Park Site, approximately 86 acres of land south of the proposed sports park for a Passive Recreation Area, and an approximately 46-acre area to the northwest of the active sports park site as a Future Expansion Area.

The estimated total potable water demand for the Proposed Project is approximately 47 af/yr. This potable water demand will be met using potable water supplies from the City's water system and could include the following uses:

- Active Sports Park Site: proposed concession and restroom buildings
- Passive Recreation Area: potential restroom building
- Future Expansion Area: interior water uses at the potential future recreation center and library, potential concession and restroom buildings, and the water supply for the potential future children's "spray park"

The primary water demand at the Proposed Project will be for turf and landscape irrigation, and will be met using non-potable water supplies. The estimated total non-potable water demand for the Proposed Project is 482 af/yr. The recommended water supply to meet this non-potable water demand will be initially untreated surface water diverted from Sugar Cut (which has historically and is currently being used to irrigate the agricultural crop being grown at the project site), and, in the future, tertiary-treated recycled water delivered from the City's wastewater treatment plant.

The Proposed Project will be developed in phases, with the first phase of development including the construction of four soccer fields, two baseball fields and associated parking lot improvements in the eastern-most portion of the Active Sports Park Site. Subsequent phases of the park development will occur as additional funding becomes available. For the purposes of the Environmental Impact Report (EIR), it has been assumed that the entire Active Sports Park Site and the Passive Recreation Area will be developed within five to ten years, and that the Future Expansion Area will be developed within 25 years, or by approximately 2032. This Water Supply Assessment evaluates the total estimated demands for the entire 298-acre Proposed Project, and conservatively assumes that buildout of the Proposed Project will occur by 2030.

Based on the analysis described herein, this Water Supply Assessment demonstrates that the City's existing and additional (future, not yet firmly assured) potable water supplies are sufficient to meet the City's existing and projected future potable water demands, including the potable water demands associated with the Proposed Project, to the year 2030 under all hydrologic conditions. Also, this Water Supply Assessment demonstrates that available existing and additional (future, not yet firmly assured) non-potable water supplies will be sufficient to meet the non-potable water demands associated with the Proposed Project to the year 2030 under all hydrologic conditions.

DRAFT

INTRODUCTION

Legal Requirement for Water Supply Assessment

Senate Bill 610 (SB 610) was approved by California Governor Gray Davis on October 9, 2001 and made effective January 1, 2002. SB 610 amended state law to improve the link between information on water supply availability and certain land use decisions made by cities and counties. Specifically, certain sections of the California Water Code were amended to require coordination between land use lead agencies and public water purveyors. The purpose of this coordination is to ensure that prudent water supply planning has been conducted, and that planned water supplies are adequate to meet existing demands, anticipated demands from approved projects and tentative maps, and the demands of proposed projects.

The amended Water Code sections 10910 through 10915 (inclusive) require land use lead agencies to: (1) identify any public water purveyor that may supply water for a proposed development project; and (2) request from the identified purveyor a Water Supply Assessment (WSA). The purpose of the WSA is to demonstrate the sufficiency of the purveyor's water supplies to satisfy the water demands of the proposed project, while still meeting the water purveyor's existing and planned future uses. Water Code sections 10910 through 10915 delineate the specific information that must be included in the WSA.

Need For and Purpose of Water Supply Assessment

The purpose of this WSA is to perform the evaluation required by Water Code sections 10910 through 10915 in connection with the City of Tracy's (City) proposed Holly Sugar Sports Park Project (Proposed Project). It is not to reserve water, or to function as a "will serve" letter or any other form of commitment to supply water (see Water Code section 10914). The provision of water service will continue to be undertaken in a manner consistent with applicable City policies and procedures, consistent with existing law.

This WSA for the Proposed Project has been prepared by West Yost Associates (WYA), as requested by the City, the identified water purveyor for the Proposed Project.

Water Supply Assessment Format and Organization

The format of this WSA is intended to follow Water Code sections 10910 through 10915 to clearly delineate compliance with the specific requirements for a WSA. The WSA includes the following sections:

- Description of Proposed Project
- Required Determinations
- Description of City of Tracy Water Service Area
- Description of City of Tracy Water Demands
- Description of City of Tracy Potable and Non-Potable Water Supplies

DRAFT

- Determination of Water Supply Sufficiency
- Water Supply Assessment Approval Process

Relevant citations of Water Code sections 10910 through 10915 are included throughout this WSA in *italics* to demonstrate compliance with the requirements of SB 610.

Acronyms and Abbreviations Used in this Water Supply Assessment

The following acronyms and abbreviations have been used throughout this WSA.

Af	Acre-feet
af/ac/yr	Acre-feet per acre per year
af/yr	Acre-feet per year
ASR	Aquifer Storage and Recovery
BBID	Byron Bethany Irrigation District
BCID	Banta Carbona Irrigation District
Bookman	Bookman-Edmonston (a.k.a. GEI Consultants and Navigant)
Bgs	Below ground surface
BMO	Basin Management Objectives
CEQA	California Environmental Quality Act
City	City of Tracy
CVP	Central Valley Project
DMC	Delta-Mendota Canal
DPH	California Department of Public Health
Du	Dwelling units
DWR	California Department of Water Resources
EIR	Environmental Impact Report
ET_o	Evapotranspiration
GMO	Growth Management Ordinance
GMP	Groundwater Management Plan
Gpcd	Gallons per capita per day
Gpd	Gallons per day
Gpm	Gallons per minute
JJWTP	John Jones Water Treatment Plant
K/J/C	Kennedy/Jenks/Chilton
M&I	Municipal and industrial
MCL	Maximum Contaminant Level
Mgd	Million gallons per day

DRAFT

Mg/L	Milligrams per liter
Msl	Mean sea level
NEPA	National Environmental Policy Act
Proposed Project	City of Tracy Holly Sugar Sports Park
PVWD	Plain View Water District
RGA	Residential Growth Allotment
RWQCB	Regional Water Quality Control Board
SB 610	California State Senate Bill 610 of 2001
SCWSP	South County Water Supply Project
Semitropic	Semitropic Water Storage Bank
Sf	Square feet
SOI	Sphere of Influence
SSJID	South San Joaquin Irrigation District
TBD	To be determined
TDS	Total Dissolved Solids
USBR	United States Bureau of Reclamation
UWMP	Urban Water Management Plan
WSA	Water Supply Assessment
WSID	West Side Irrigation District
WYA	West Yost Associates

DRAFT

DESCRIPTION OF PROPOSED PROJECT

Project Location

The Proposed Project consists of approximately 298 acres and is located in San Joaquin County, California, immediately north of the City limits of Tracy, but within the City's Sphere of Influence (SOI). The Proposed Project is located between Tracy Boulevard and Corral Hollow Road north of Larch Road and south of Sugar Road. The project site is located on land which was previously owned by the Holly Sugar Company and purchased by the City in 2004. Figure 1 illustrates the location of the Proposed Project in relation to the City Limits and the City's SOI.

Current Land Uses

The project site is currently undeveloped and has historically been, and continues to be, actively used for agricultural purposes. There are several irrigation canals that traverse the project site and actively convey surface water (non-potable water) to the site and the surrounding properties. The site is currently farmed. Alfalfa is being grown on the site. Irrigation water for agricultural operations at the project site has historically (since at least 1912) and is currently obtained from Sugar Cut (a man-made canal connected to Tom Paine Slough). Current water supply facilities include two 75-horsepower pumps which pump water out of Sugar Cut, a 24-inch pipeline from Sugar Cut to the project site, and tailwater drainage ditches on and through the project site which drain to the north.

The project site is designated as Agricultural (AG) land by both the City of Tracy General Plan Land Use Designations Map and the San Joaquin County General Plan Land Use Designations Map. The County zoning designation for the project site is Agriculture (AG-40). The project site does not have an assigned zoning designation from the City of Tracy, as the project site is currently located outside of the City limits. The City is proposing to pre-zone the project site for park use and to annex the entire 298-acre site into the City of Tracy. Upon annexation of the project site into the City of Tracy, the City will amend the General Plan and associated Land Use Designation Map to designate the project site for recreation/public uses.

Lands to the north, west and east of the project site are agricultural lands, with a few scattered residences. Land to the south of the project site consists of rural residential development.

DRAFT

Proposed Land Uses and Acreages

As described in the Holly Sugar Sports Park Notice of Preparation and Initial Study, and Draft EIR Project Description[1], development of the Proposed Project will occur over many years and will include the phased development of the 166-acre Active Sports Park Site[2], along with the 86-acre Passive Recreation Area to the south and the 46-acre Future Expansion Area to the northwest of the active sports park site (see Figure 2). The Active Sports Park Site at buildout will consist of numerous soccer fields, baseball fields, softball fields, play areas, and concession stands and restroom facilities as listed in Table 1 and shown on Figure 3.

No definitive plans or specific uses have been developed for either the Passive Recreation Area or the Future Expansion Area. Future potential uses for the Passive Recreation Area include walking and biking trails, bocce ball, disc golf, or an arboretum (see Table 1). Future potential uses for the Future Expansion Area include a skate park and/or BMX park, a paintball course, shuffleboard and/or bocce ball courts, hard courts and/or additional athletic fields, a recreation center, a library, a children's "spray park", and bike paths (see Table 1).

For the Active Sports Park Site, development will begin on the eastern portion of the site and progress in phases in a westerly direction. The initial phase will include the construction of four soccer fields, two baseball fields and associated parking lot improvements in the eastern-most portion of the project site. Subsequent phases of the sports park development will occur as additional funding becomes available. For the purposes of the Environmental Impact Report (EIR), it has been assumed that the entire Active Sports Park Site and the Passive Recreation Area will be developed within five to ten years, and that the Future Expansion Area will be developed within 25 years, or by approximately 2032. For purposes of this WSA, and to be conservative, it has been assumed that buildout of the Proposed Project will occur by 2030.

Projected Water Demand

Water Use Factors and Assumptions

Based on the proposed land uses for the Proposed Project, the projected water demand for the Proposed Project has been calculated. Estimated water use factors have been developed for both the potable and non-potable water uses at the Proposed Project, and are listed in Tables 2 and 3 below.

DRAFT

[1] Holly Sugar Sports Park Notice of Preparation and Initial Study, prepared for the City of Tracy, prepared by De Novo Planning Group, dated December 24, 2008.

[2] The Holly Sugar Sports Park Notice of Preparation and Initial Study indicates that the Active Sports Park Site is 150 acres. However, per a March 9, 2009 e-mail from Scott Claar, City of Tracy Department of Development and Engineering Services, to West Yost Associates, the Active Sports Park Site is actually 166 acres. This revised acreage will be reflected in the project description for the Environmental Impact Report.

DRAFT

Table 1. Summary of Proposed Land Uses for Holly Sugar Sports Park[a]

Active Sports Park Site	**Total Area:**	**166**	**acres[b]**
Proposed Uses:			
Four (4) U-10 Soccer Fields			
Three (3) U12 Soccer Fields			
Seven (7) U14-U19 Soccer Fields			
Two (2) 396-foot Outfield Baseball Fields			
One (1) 350-foot Outfield Baseball Field			
One (1) 330-foot Outfield Baseball Field			
Ten (10) 220-foot Baseball Fields			
Four (4) 220-foot Baseball Fields (Stadium)			
Four (4) 200-foot Softball Fields			
One (1) 200-foot Softball Field (Stadium)			
Four (4) Football Fields			
One (1) Football/Soccer Field (Stadium)			
Four (4) Play Areas			
Six (6) Restroom/Concession Stands			
Passive Recreation Area (Parcel A)	**Total Area:**	**86**	**acres**
Future Potential Uses:			
Walking and biking trails			
Bocce Ball			
Arboretum			
Disc Golf			
Future Expansion Area (Parcel B)	**Total Area:**	**46**	**acres**
Future Potential Uses:			
Skate Park and/or BMX Park (up to 11,000 sf maximum)			
Paintball Course (2.5 acres)			
Shuffleboard and/or Bocce Ball Courts (4 courts total)			
Hard Courts (basketball)			
Athletic Fields (up to 23,000 sf maximum)			
Recreation Center (up to 45,000 sf maximum)			
Library (up to 25,000 sf maximum)			
Children's "Spray Park"			
Class 1 Bike Path			

[a] Land use data per Holly Sugar Sports Park Notice of Preparation and Initial Study, prepared by DeNovo Planning Group, December 24, 2008. Figure 4 Conceptual Design Holly Sugar Sports Park, prepared by Verde Design, dated November 5, 2008; Draft EIR Project Description dated January 2009.

[b] Total acres for Active Sports Park Site revised from 150 acres to 166 acres per e-mail from Scott Claar, City of Tracy Department of Development and Engineering Services, March 9, 2009.

As shown in Table 2, potable water is assumed to be used for the following uses:

- Active Sports Park Site: proposed concession and restroom buildings
- Passive Recreation Area: potential restroom building
- Future Expansion Area: interior water uses at the potential future recreation center and library, potential concession and restroom buildings, and the water supply for the potential future children's "spray park"

Table 2. Estimated Potable Water Use Factors for the Holly Sugar Sports Park

Proposed Potable Water Uses	Potable Water Use Factor
Concession stands and restroom buildings	10 gallons per minute (gpm) for 12 hours per day for 100 days per year per building
Interior water use for recreation center and library	0.1 gallons per day (gpd) per square foot
Children's "spray park"	10,000 gallons per day (gpd) for 150 days per year

As shown in Table 3, non-potable water is assumed to be used for all other water demands on the project site including turf irrigation, dust control on "skin areas" of baseball and softball fields, and landscape irrigation. It should be noted that the Notice of Preparation and Initial Study for the Holly Sugar Sports Park indicates that the proposed football/soccer stadium located near the western boundary of the site would include synthetic turf. For purposes of this WSA, and to be conservative, it is assumed that natural grass turf will be provided for all of the proposed football, baseball, softball and soccer fields, including the proposed football/soccer stadium[3].

Table 3. Estimated Non-Potable Water Use Factors for the Holly Sugar Sports Park

Proposed Non-Potable Water Uses	Non-Potable Water Use Factor
Turf irrigation (including sports fields and play areas)	3.5 acre-feet per acre per year (af/ac/yr)
Dust control on "skin areas" of baseball and softball fields	1.0 af/ac/yr
General landscape irrigation (trees and perimeter plantings with bubbler irrigation systems)	2.0 af/ac/yr

[3] This assumption is consistent with direction provided by Scott Claar, City of Tracy Department of Development and Engineering Services, in a March 4, 2009 e-mail to West Yost Associates.

Projected Water Demand

Table 4 presents the total projected potable and non-potable water demands for the Proposed Project. Projected potable and non-potable water demands for the Active Sports Park Site are based on a breakdown of the proposed land uses as provided by the City of Tracy Department of Development and Engineering Services. Projected potable and non-potable water demands for the Passive Recreation Area and the Future Expansion Area are based on assumed future potential land uses as described in the Notice of Preparation and Initial Study, and Draft EIR Project Description (summarized in Table 1), assuming that overall development of those areas is similar in nature to the Active Sports Park Site.

The potable water demand of 47 af/yr is proposed to be met using potable water supplies from the City's water system. The recommended non-potable water supply to meet the non-potable water demand of 482 af/yr will initially be untreated surface water diverted from Sugar Cut (which has historically and is currently being used to irrigate the project site) and, in the future, tertiary-treated recycled water delivered from the City's wastewater treatment plant.

As shown in Table 4, these projected water demands include a contingency to account for changes to the proposed land use for the Proposed Project which may occur during the planning process and the uncertainty in the future development plans for the Passive Recreation Area and the Future Expansion Area.

It should also be noted that although actual potable and non-potable water demands for the Proposed Project will develop incrementally over time as various elements of the Proposed Project are implemented, this WSA provides analysis of the total estimated potable and non-potable demands for buildout of the Proposed Project and conservatively assumes that buildout of the Proposed Project will occur by 2030.

Comparison with Existing Water Uses at the Project Site and Water Demand Calculations in the City's Urban Water Management Plan

As described above, the project site is part of the former Holly Sugar processing and packing facility which ceased operations several years ago. Water use at the facility since then has consisted of potable water use for on-going cleanup and maintenance of remaining buildings and non-potable water use for continued agricultural use of the surrounding lands (using untreated surface water diverted from Sugar Cut).

Recent potable water use at the former Holly Sugar facility is summarized on Table 5. As shown, the annual potable water use at the facility in recent years has ranged from about 22 to 48 af/yr based on the City's metered water use records. These potable water demands are included in the City's existing potable water demands in the City's 2005 Urban Water Management Plan (UWMP).

DRAFT

DRAFT

Table 4. Estimated Potable and Non-Potable Water Demands for the Proposed Project[a]

Land Use Type	Land Use Assumptions	Water Use Assumptions	Square Feet[b]	Acres	Estimated Unit Potable Water Use		Estimated Unit Non-Potable Water Use		Estimated Potable Water Use, af/yr	Estimated Non-Potable Water Use, af/yr
Active Sports Park Site		**Total Area:**	**166**	**acres**						
Irrigated Turf	Soccer, baseball, softball, and football fields and soccer warm-up area	Non-potable water	2,368,315	54.4	0		3.5	af/ac/yr	-	190.3
Synthetic Turf	Designated for proposed football/soccer stadium; however, for purposes of this WSA will be assumed to be natural grass turf	Non-potable water	220,050	5.1	0		3.5	af/ac/yr	-	17.7
"Skin Area" of Baseball and Softball Fields	Skin area of baseball and softball fields, including warning tracks	Non-potable water	421,062	9.7	0		1.0	af/ac/yr	-	9.7
Retention Basins	Intended to be non-irrigated "native" grasses	No water use	323,457	7.4	0		0		-	
Bark Mulch Area	Bubbler irrigation to trees only	Non-potable water	196,060	4.5	0		2.0	af/ac/yr	-	9.0
Concrete Paved Areas		No water use	160,528	3.7	0		0		-	
Asphalt Paved Area	No vehicle access	No water use	222,733	5.1	0		0		-	-
Parking/Roadway Asphalt		No water use	826,925	19.0	0		0		-	-
Concession/Restroom Building	6 buildings	Potable Water	8,112	0.2	7,200	gpd/building (10 gpm for 12 hours per day)(100 days per year assumed)	0		13.3	
Play Area	4 play areas; assume 50% of play area is to be irrigated	Non-potable water	64,000	1.5	0		3.5	af/ac/yr	-	2.6
Perimeter Plantings	Assumed to be 10% of overall area; assume bubbler irrigation [c]	Non-potable water		16.6	0		2.0	af/ac/yr	-	33.2
Other Non-Irrigated Areas	Remaining area not accounted for in above land uses (includes corners beyond fields, buffer zones, areas under powerlines, maintenance facility, and existing waterways)	No water use		38.9	0		0		-	-
		Total Area:		166.0	**Estimated Potable and Non-Potable Water Demand, af/yr**				**13.3**	**262.4**
					Contingency[e] (assumed to be 5 af/yr for potable water demand, and 10 percent for non-potable water demand), af/yr				**5.0**	**26.2**
					Total Estimated Potable and Non-Potable Water Demand, af/yr				**18.3**	**288.7**
Passive Recreation Area (Parcel A)[d]		**Total Area:**	**86**	**acres**						
Walking and Biking Trails		No water use								
Bocce Ball		No water use								
Disc Golf	Assumed to be 10 acres of irrigated turf	Non-potable water		10.0	0		3.5	af/ac/yr	-	35.0
Arboretum	Assumed to be 10 acres of irrigated landscape and turf	Non-potable water		10.0	0		3.5	af/ac/yr	-	35.0
Restroom Building	1 building assumed	Potable water		0.0	7,200	gpd/building (10 gpm for 12 hours per day)(100 days per year assumed)	0		2.2	
Perimeter Plantings	Assumed to be 10% of overall area; assume bubbler irrigation[c]	Non-potable water		8.6	0		2.0	af/ac/yr	-	17.2
Other Non-Irrigated Areas	Remaining area not accounted for in above land uses	No water use		57.4	0		0		-	-
		Total Area:		86.0	**Estimated Potable and Non-Potable Water Demand, af/yr**				**2.2**	**87.2**
					Contingency[e] (assumed to be 5 af/yr for potable water demand, and 50 percent for non-potable water demand), af/yr				**5.0**	**43.6**
					Total Estimated Potable and Non-Potable Water Demand, af/yr				**7.2**	**130.8**
Future Expansion Area (Parcel B)[d]		**Total Area:**	**46**	**acres**						
Skate Park/BMX Park		No water use								
Paintball Course		No water use								
Shuffleboard/Bocce Ball		No water use								
Hard Courts	Basketball	No water use								
Irrigated Turf	Up to 23,000 sf maximum of additional athletic fields; additional turf areas between fields and courts; assumed to be 5 acres total	Non-potable water		5.0	0		3.5	af/ac/yr	-	17.5
Bark Mulch Area	Bubbler irrigation to trees only; areas between fields and courts	Non-potable water		5.0	0		2.0	af/ac/yr	-	10.0
Concession/Restroom Building	2 buildings assumed	Potable water		0.1	7,200	gpd/building (10 gpm for 12 hours per day)(100 days per year assumed)	0		4.4	-
Recreation Center	Gymnasium, meeting rooms, community rooms, and multi-purpose rooms totaling up to 45,000 sf maximum; assume 1 acre of exterior landscaping to be irrigated with non-potable water	Potable water for interior uses/non-potable water for exterior uses	45,000	1.0	0.1	gpd/sf	3.5	af/ac/yr	5.0	3.5
Library	Up to 25,000 sf maximum; assume 1 acre of exterior landscaping to be irrigated with non-potable water	Potable water for interior uses/non-potable water for exterior uses	25,000	1.0	0.1	gpd/sf	3.5	af/ac/yr	2.8	3.5
Children's "Spray Park"	Children's park with small water features, sprinklers, etc.	Potable water			10,000	gpd for 150 days/year	0		4.6	-
Perimeter Plantings	Assumed to be 10% of overall area; assume bubbler irrigation[c]	Non-potable water		4.6	0		2.0	af/ac/yr	-	6.9
Other Non-Irrigated Areas	Remaining area not accounted for in above land uses	No water use		29.3	0		0		-	-
		Total Area:		46.0	**Estimated Potable and Non-Potable Water Demand, af/yr**				**16.9**	**41.4**
					Contingency[e] (assumed to be 5 af/yr for potable water demand, and 50 percent for non-potable water demand), af/yr				**5.0**	**20.7**
					Total Estimated Potable and Non-Potable Water Demand, af/yr				**21.9**	**62.1**
					Total Estimated Potable and Non-Potable Water Demand, af/yr				**47.3**	**481.6**

[a] Land use data per Holly Sugar Sports Park Notice of Preparation and Initial Study, prepared by DeNovo Planning Group, December 24, 2008. Figure 4 Conceptual Design Holly Sugar Sports Park, prepared by Verde Design, dated November 5, 2008; Draft EIR Project Description dated January 2009.

[b] Square footages for active sports park area per information received from the City of Tracy Department of Development and Engineering Services (Planning Division) on March 5, 2009.

[c] Assumed by WYA based on Figure 4 Conceptual Design Holly Sugar Sports Park, prepared by Verde Design, dated November 5, 2008.

[d] Assumed by WYA based on future potential uses presented in the Holly Sugar Sports Park Notice of Preparation and Initial Study, prepared by DeNovo Planning Group, December 24, 2008.

[e] Contingency added to account for changes in land use plans and uncertainty related to development of the Passive Recreation Area and the Future Expansion Area.

Table 5. Recent Potable Water Use at Holly Sugar Facility

Year	Metered Water Consumption, 100 cubic feet [(a)]	Metered Water Consumption, af/yr
1999	19,501	44.8
2000	No data available	--
2001	No data available	--
2002	11,480	26.4
2003	11,960	27.5
2004	16,790	38.5
2005	20,975	48.2
2006	11,280	25.9
2007	10,905	25.0
2008	9,810	22.5

[(a)] Based on City of Tracy Water Reading History for Holly Sugar water service account.

Untreated surface water from Sugar Cut has been used to irrigate the project site since at least 1912. The project site has been continuously farmed over the years and planted with a variety of crops, including winter wheat, corn, tomatoes, and, when the property was owned by Holly Sugar, sugar beets. The current crop on the project site is predominantly alfalfa, which is irrigated with non-potable untreated surface water diverted from Sugar Cut. The actual metered quantity of non-potable water use is not available, but is estimated to be at least 4 to 6 af/ac/yr based on the types of crops planted on the property (primarily alfalfa). This equates to at least 1,200 to 1,800 af/yr of non-potable untreated surface water currently being used to flood irrigate the 298-acre project site.

The proposed use of non-potable surface water from Sugar Cut for the Proposed Project is estimated to be up to 482 af/yr (based on buildout of the Proposed Project). This equates to less than half of the current non-potable water use on the project site.

The Proposed Project site is currently located outside of the City limits and is not located within any of the City's major designated planning areas. As such, future potable water demands and non-potable water demands for the project area were not explicitly included in the City's 2005 (UWMP). However, as discussed in this WSA, the potable and non-potable water demands for the Proposed Project, together with the City's existing water demands and projected water demands for approved and currently anticipated future projects, are within the water demand projections included in the City's 2005 UWMP.

DRAFT

REQUIRED DETERMINATIONS

Does SB 610 apply to the Proposed Project?

10910 (a) Any city or county that determines that a project, as defined in Section 10912, is subject to the California Environmental Quality Act (Division 13 (commencing with Section 21000) of the Public Resources Code) under Section 21080 of the Public Resources Code shall comply with this part.

10912 (a) "Project" means any of the following:

(1) A proposed residential development of more than 500 dwelling units.

(2) A proposed shopping center or business establishment employing more than 1,000 persons or having more than 500,000 square feet of floor space.

(3) A proposed commercial office building employing more than 1,000 persons or having more than 250,000 square feet of floor space.

(4) A proposed hotel or motel, or both, having more than 500 rooms.

(5) A proposed industrial, manufacturing, or processing plant, or industrial park planned to house more than 1,000 persons, occupying more than 40 acres of land, or having more than 650,000 square feet of floor area.

(6) A mixed-use project that includes one or more of the projects specified in this subdivision.

(7) A project that would demand an amount of water equivalent to, or greater than, the amount of water required by a 500-dwelling unit project.

Although the total water demand for the Proposed Project (529 af/yr) (see Table 4) is estimated to be higher than the equivalent amount of water required by a 500-dwelling unit project (estimated to be about 250 af/yr), the majority of the proposed water demands for the Proposed Project are proposed to be met using non-potable water supplies (see discussion in previous section). Because of this fact, it is unclear if the statutes of SB 610 apply to the Proposed Project. However, to be conservative and to ensure that all applicable requirements are met, the City has decided that a WSA would be prepared for the Proposed Project.

The Proposed Project has not been the subject of a previously adopted WSA and has not been included in an adopted WSA for a larger project.

Who is the identified public water system?

10910(b) The city or county, at the time that it determines whether an environmental impact report, a negative declaration, or a mitigated negative declaration is required for any project subject to the California Environmental Quality Act pursuant to Section 21080.1 of the Public Resources Code, shall identify any water system that is, or may become as a result of supplying water to the project identified pursuant to this subdivision, a public water system, as defined by Section 10912, that may supply water for the project

10912 (c) "Public water system" means a system for the provision of piped water to the public for human consumption that has 3,000 or more service connections…

As shown on Figure 1, the Proposed Project is located outside the City of Tracy City limits, but within the City's SOI, as defined in the City's General Plan. Although the Proposed Project is currently located outside the City limits, the City is proposing to annex the entire 298-acre site into the City of Tracy. The City's water system service area includes all areas within the City limits and the General Plan SOI area as they are annexed into the City. As of November 2008,

the City had 23,329 water service connections. Therefore, the City is the identified public water system for the Proposed Project.

Does the City have an adopted Urban Water Management Plan (UWMP) and does the UWMP include the projected water demand for the Proposed Project?

10910(c)(1) The city or county, at the time it makes the determination required under Section 21080.1 of the Public Resources Code, shall request each public water system identified pursuant to subdivision (b) to determine whether the projected water demand associated with a proposed project was included as part of the most recently adopted urban water management plan adopted pursuant to Part 2.6 (commencing with Section 10610).

The City's latest UWMP was adopted by the City Council in December 2005[4]. The City's UWMP included existing and projected potable and non-potable (recycled) water demands for existing and projected future land uses within the City's General Plan SOI. The projections in the UWMP were based on normalized water demands for existing land uses and "approved and anticipated development"[5] within the City.

As discussed above, the project site is currently located outside of the City limits and is not located within any of the City's major designated planning areas. As such, future potable water demands and non-potable water demands for the project area were not explicitly included in the City's UWMP. However, as discussed in this WSA, the potable and non-potable water demands for the Proposed Project, together with the City's existing water demands and currently projected water demands for approved and currently anticipated future projects, are within the water demand projections included in the City's 2005 UWMP.

DRAFT

[4] City of Tracy Urban Water Management Plan, prepared by Erler & Kalinowski, Inc., December 2005.

[5] Term used in the City's 2005 UWMP and the City's Annual Water Inventory Reports to describe anticipated upcoming projects. The currently "approved projects" are not yet completed; however, they do include projects for which building permits have been issued and/or for which Residential Growth Allotments (RGAs) have been secured. Currently "anticipated development projects" include projects in the planning stage and those for which specific plans have been prepared.

CITY OF TRACY WATER SERVICE AREA

Water Service Area

The City is located in San Joaquin County, California, about 70 miles south of Sacramento and 60 miles east of San Francisco. The existing incorporated area of the City encompasses approximately 22 square miles. The SOI is the area outside of the City limits that the City expects to annex and urbanize in the future. The SOI is approximately 51 square miles, about 29 square miles larger than the current City limits. The City's water service area is coterminous with the City limits. As future developments within the SOI, but outside the City Limits, are approved, they will be annexed into the City and served by the City water system. Figure 1 previously illustrated the current City limits and the SOI. The Proposed Project is located outside the existing City limits, but within the City's SOI.

Population

Approximately 80,000 people currently live in the City. Population growth has been rapid in the City, with the City growing by 142 percent between 1988 and 2003, a compounded rate of approximately 6 percent per year. The City's population growth, at least in the near-term, is not anticipated to be as rapid as it has been historically. The City adopted a residential Growth Management Ordinance (GMO) in 1987, which was amended in 2000 by Measure A. The objective of the GMO and Measure A was to achieve a steady and orderly growth rate that allows for the adequate provision of services and community facilities, and includes a balance of housing opportunities. Under the GMO, builders must obtain a Residential Growth Allotment (RGA) in order to secure a residential building permit.

The GMO Guidelines were adopted by resolution of the City Council. Through implementation of the City's General Plan and the GMO, the City's population is expected to increase at a rate equivalent to less than 1 percent per year until 2013, and at a rate equivalent to approximately 2 percent per year from 2013 to 2025. Although the General Plan only includes development to 2025, for purposes of this WSA, and to comply with the 20-year planning horizon required by SB 610, it has been assumed that the City's population will continue to grow at a rate equivalent to approximately 2 percent per year from 2025 to 2030. Table 6 shows the City's projected population in five-year increments to the year 2030. As shown, the City's population is expected to grow by approximately 42,000 between 2005 and 2030. When this population growth is added to the 2005 population (78,300 per the State of California Department of Finance), the City is projected to have a total future population of approximately 120,300 by the year 2030.

DRAFT

Table 6. Historical and Projected Service Area Population[a]

Year	Historical Population				Projected Population				
	1990	1995	2000	2005	2010	2015	2020	2025	2030[b]
Population	32,730	48,570	57,000	78,300	83,100	87,800	98,400	109,000	120,300

[a] Source: Table 3, City of Tracy Urban Water Management Plan, December 2005.
[b] Assumes population increases at a rate of 2 percent per year from 2025 to 2030.

Climate

Spring, summer, and fall are generally hot in the City, with temperatures often climbing to over 100 degrees Fahrenheit on summer days. The City's winters are usually mild, although the dense "Tule fog" can last for weeks. Mean winter temperatures range from 40 to 50 degrees Fahrenheit, with an average of 16 days per year having frost. Most precipitation occurs during the winter. The average annual precipitation from the years 1949 to 2007 is recorded by the Western Regional Climate Center as 9.9 inches. Table 7 summarizes the City's average temperature and rainfall data.

Table 7. City of Tracy Climate Data

	Jan	Feb	Mar	Apr	May	Jun	Jul	Aug	Sep	Oct	Nov	Dec	Total
Average Et_o, in[a]	0.95	1.75	3.48	5.37	6.88	7.79	8.29	7.24	5.33	3.63	1.76	1.01	53.48
Average Max Temperature, °F[b]	54.1	61.0	66.8	73.2	80.8	88.2	93.8	92.2	87.8	78.6	64.9	54.7	74.7
Average Min Temperature, °F[b]	36.7	40.0	42.6	45.4	50.2	55.0	57.1	55.7	53.8	48.7	42.1	36.6	47.0
Average Rainfall, in[b]	1.89	1.71	1.39	0.83	0.47	0.08	0.03	0.09	0.23	0.51	1.12	1.56	9.9

[a] Source: CIMIS Website: wwwcimis.water.ca.gov, Station 167 Tracy, Monthly Average Et_o Report, downloaded August 2008.
[b] Source: Western Regional Climate Center website: www.wrcc.dri.edu, Tracy Carbona Weather Station (No. 048999), Period of Record 10/1/49 to 12/31/07.

DRAFT

CITY OF TRACY WATER DEMANDS

10910(c)(2) If the projected water demand associated with the proposed project was accounted for in the most recently adopted urban water management plan, the public water system may incorporate the requested information from the urban water management plan in preparing the elements of the assessment required to comply with subdivisions (d), (e), (f), and (g).

The descriptions provided below for the City's water demands have been taken, for the most part, from the City's UWMP, which was adopted in December 2005. Supplemental information from the City's Water Inventory Reports (the most recent is dated February 17, 2009) and other available reports have been included to provide the most recent data available and to meet the specific requirements of SB 610.

Historical and Existing Potable Water Demand

The City's water demand has increased by over 100 percent in the last twenty years. In 1987, the City's water demand was 8,262 af/yr and, in 2008, the City's water demand was 17,118 af/yr. Figure 4 shows the City's historical annual water demand (based on water production) from 1987 through 2008. Table 8 shows the water demand (based on water production) for 2000 through 2008.

Table 8. Historical Potable Water Demand

	Potable Water Demand, af/yr								
	2000	2001	2002	2003	2004	2005	2006	2007	2008
Total Water Supply Produced[(a)]	13,469	15,042	15,680	16,965	18,363	17,892	18,000	19,176	17,118

[(a)] Based on total water supply produced; includes unaccounted for water. Source: City of Tracy Water Inventory Reports.

As shown in Table 8 and Figure 4, the City's 2008 potable water demands (based on water production) were about 2,058 af/yr lower than 2007 demands. This reduction in potable water demand is partially due to the dry hydrologic conditions in 2008, which led to voluntary water conservation by the City's water customers. The reduction in 2008 demands may also be due to a large number of unoccupied homes due to recent economic conditions. Because the 2008 water demands were a result of dry hydrologic conditions and economic factors, the higher 2007 water demands (considered to be more representative of normal demand conditions) are used to represent existing demand conditions, and will be used as the basis for the evaluation contained in this WSA.

Additional (Future) Potable Water Demand

The City's potable water demand is anticipated to continue to increase as new developments are approved and constructed within the City's water service area. However, as discussed above, the rate of growth within the City service area has slowed as a result of the Growth Management Ordinance and the recent economic downturn. Hence, potable water demands are not anticipated to increase as rapidly as they have in past years.

Figure 5 illustrates the City's projected potable water demand through 2030 as presented in the City's 2005 UWMP. Table 9 shows the projected potable water demand through 2030 as presented in the City's 2005 UWMP.

Table 9. Projected Future Potable Water Demand[(a)]

	Potable Water Demand in the City's 2005 UWMP, af/yr					
	2005[(b)]	2010	2015	2020	2025	2030[(c)]
Total UWMP Water Demand	18,500	19,900	22,700	25,900	28,200	30,500

(a) Table 8, City of Tracy Urban Water Management Plan, December 2005.
(b) Data shown for 2005 is as presented in the City's 2005 UWMP and is based on a projection for October through December 2005. Actual total water demand in 2005 was 17,892 acre-feet.
(c) Data shown for 2030 is based on an incremental increase from 2025 equal to the increase from 2020 to 2025.

Table 10 summarizes the City's projected potable water demand based on existing uses and planned future uses, which includes approved projects that are not yet complete and anticipated development projects. The projected potable water demands for the "Approved and Anticipated Development Projects" are based on data which accounts for changes in on-going development and planning activities. The "currently approved projects that are not yet complete" primarily include projects for which building permits have been issued and/or for which Residential Growth Allotments (RGAs) have been secured. "Currently anticipated development projects" include projects in the planning stage and those for which specific plans have been prepared. Potable water demands for these two categories of upcoming projects are continuously reviewed and revised by the City as development and planning activities occur, and are the City's best current estimate of planned future uses. As shown, the potable water demands for the Proposed Project, together with the City's existing water demands and projected water demands for approved and currently anticipated future projects, are within the water demand projections included in the City's 2005 UWMP for 2030.

DRAFT

Table 10. City of Tracy Projected Future Potable Water Demand by Development Stage

	Existing Potable Water Demand, af/yr	Future Potable Water Demand, af/yr[a]	Future Potable Water Demand, af/yr[b]
2007 Existing Users[c]	17,820		19,176
Planned Future Uses (Approved and Anticipated Development Projects)			
Currently Approved Projects that are not yet complete[d]		3,284	3,530
Currently Anticipated Development Projects[e]		2,861	3,076
Subtotal: Existing Users + Planned Future Uses	**17,820**	**6,145**	**25,782**
Potable Water Demand for the Proposed Project (see Table 4)		47	51
Total: Existing Users + Planned Future Uses + Proposed Project[f]	**17,820**	**6,192**	**25,833**
2030 (includes Existing Users, Planned Future Uses, the Proposed Project, and Other Future Projects[g])			**30,500**

(a) Does not include unaccounted for water.
(b) Includes actual potable water demand in 2007 and projected potable water demand for approved and anticipated projects and Proposed Project (includes 7.5 percent unaccounted for water).
(c) Based on water usage data and City of Tracy Water Inventory Report, February 5, 2008. As noted above, 2007 potable water demands are used for the evaluation in this WSA, as 2007 potable water demands more closely represent normal year conditions (2008 was a dry year).
(d) Includes Tracy Gateway (with zero potable water demand as a result of the Water Exchange Program), Ellis Specific Plan, and Downtown Specific Plan.
(e) Based on current development and planning activities.
(f) Total projected potable water demand for existing uses, planned future uses and Proposed Project is within the demand projected in the City's 2005 UWMP for 2020 and beyond.
(g) Other Future Projects includes future projects within the Urban Reserve areas (such as Tracy Hills) which are anticipated to develop by 2030, but which are not included in planned future uses. Water demand projections based on 2005 UWMP future projections through 2025 and extrapolated to 2030 (see Table 9).

As noted above in Table 10, the currently approved development projects do not include potable water demand for the Tracy Gateway Project. This is because the current water supply plan for the Tracy Gateway Project provides for a water exchange program that requires the Tracy Gateway Project to provide recycled water supplies and infrastructure for irrigation of selected City parks and other landscaped areas, in exchange for use of similar quantities of potable water supplies. This "recycled water exchange program" is intended to develop a sufficient quantity of recycled water supply to "offset" the existing use of potable supplies on these designated parks, allowing these potable supplies to now be used to meet the Tracy Gateway Project's entire projected potable water demand, such that the net potable water demand associated with the Tracy Gateway Project is 0 af/yr.

DRAFT

As shown in Table 10, based on existing users and the planned future uses, the projected potable water demand is 25,782 af/yr. With the Proposed Project, this projected potable water demand increases to 25,833 af/yr. With the inclusion of other future projects to be developed by 2030 within the Urban Reserve areas (e.g., Tracy Hills), the projected potable water demand increases to 30,500 af/yr by 2030.

Figure 6 shows the City's projected future water demand by development stage based on the currently available water demand estimates.

Dry Year Potable Water Demand

The City currently has an extensive water conservation program in place, as described in Chapter 7 of the City's 2005 UWMP. The projected future potable water demand presented in Table 9 above includes continued implementation of the City's existing water conservation program, and is based on future normal hydrologic years. In single dry or multiple dry years, the projected future potable water demand in Table 9 is also applicable, and does not include any additional water conservation. This is because, as water demands begin to increase in the spring due to the warmer weather conditions, due to the lack of rainfall during the previous winter/spring period, and the subsequent public notification of dry conditions, some conservation will occur, and summer water demands will likely decrease, essentially balancing out the demands within that year. In an extreme dry year, it is anticipated that overall water demands will be reduced by 10 percent due to mandated water conservation measures. Table 11 presents the projected future dry year water demand.

Table 11. Projected Future Dry Year Potable Water Demand

Hydrologic Condition	Percent Reduction	Potable Water Demand, af/yr[(a)]					
		2005	2010	2015	2020	2025	2030
Normal Year	0%	18,500	19,900	22,700	25,900	28,200	30,500
Single Dry Year	0%	18,500	19,900	22,700	25,900	28,200	30,500
Multiple Dry Years	0%	18,500	19,900	22,700	25,900	28,200	30,500
Extreme Dry Year[(b)]	10%	16,650	17,900	20,400	23,300	25,400	27,450

(a) Includes unaccounted for water of 7.5 percent.
(b) Water demand in an extreme dry year reduced by 10 percent due to additional mandated water conservation measures.

Additional (Future) Non-Potable Water Demand

In 2002, the City adopted a Recycled and Non-Potable Water Ordinance requiring all new subdivisions, to the extent practicable, to install the required infrastructure (such as dual-distribution pipelines) to provide recycled water to meet non-potable water demands at parks, golf courses, athletic fields, schools, median island landscapes, and industrial sites.

Several of the City's major development projects (e.g., Tracy Gateway Project and Tracy Hills) are planning for the use of non-potable and recycled water supplies to meet landscape irrigation demands. The projected recycled water demand for the Tracy Gateway Project is 763 af/yr for on-site landscape irrigation uses and up to 780 af/yr for off-site landscape irrigation uses at City parks and other large landscaped areas as part of the Water Exchange Program[6]. The projected recycled water demand for the Tracy Hills Project is 3,300 af/yr[7].

As described above, most of the water demands associated with the Proposed Project are proposed to be met with non-potable supplies (initially untreated surface water from Sugar Cut and, in the future, tertiary treated recycled water from the City's wastewater treatment plant). These non-potable demands are estimated to be about 482 af/yr at buildout of the Proposed Project (see Table 4).

DRAFT

[6] City of Tracy 2005 UWMP, Table 25. Projected Future Recycled Water Demand.

[7] City of Tracy 2005 UWMP, Table 25.

CITY OF TRACY WATER SUPPLIES

10910(c)(2) If the projected water demand associated with the proposed project was accounted for in the most recently adopted urban water management plan, the public water system may incorporate the requested information from the urban water management plan in preparing the elements of the assessment required to comply with subdivisions (d), (e), (f) and (g).

10910(d)(1) The assessment required by this section shall include an identification of any existing water supply entitlements, water rights, or water service contracts relevant to the identified water supply for the proposed project, and a description of the quantities of water received in prior years by the public water system, or the city or county if either is required to comply with this part pursuant to subdivision (b), under the existing water supply entitlements, water rights, or water service contracts

10910(d)(2) An identification of existing water supply entitlements, water rights, or water service contracts held by the public water system, or the city or county if either is required to comply with this part pursuant to subdivision (b), shall be demonstrated by providing information related to all of the following:

- *(A) Written contracts or other proof of entitlement to an identified water supply.*
- *(B) Copies of a capital outlay program for financing the delivery of a water supply that has been adopted by the public water system.*
- *(C) Federal, state, and local permits for construction of necessary infrastructure associated with delivering the water supply.*
- *(D) Any necessary regulatory approvals that are required in order to be able to convey or deliver the water supply.*

10910(e) If no water has been received in prior years by the public water system, or the city or county if either is required to comply with this part pursuant to subdivision (b), under the existing water supply entitlements, water rights, or water service contracts, the public water system, or the city or county if either is required to comply with this part pursuant to subdivision (b), shall also include in its water supply assessment pursuant to subdivision (c), an identification of the other public water systems or water service contract-holders that receive a water supply or have existing water supply entitlements, water rights, or water service contracts, to the same source of water as the public water system, or the city or county if either is required to comply with this part pursuant to subdivision (b), has identified as a source of water supply within its water supply assessments..

The Proposed Project, if approved by the City, is capable of being served by the City from the City's existing and future portfolio of potable and non-potable water supplies. Potable water demands for the Proposed Project will be supplied by the City via the City's existing potable water system. It is recommended that non-potable water demands for the Proposed Project be initially supplied by untreated surface water from Sugar Cut. In the future, it is anticipated that the non-potable demands for the Proposed Project will be met using tertiary-treated recycled water produced from the City's wastewater treatment plant.

The descriptions provided below for the City's water supplies have been taken, for the most part, from the City's 2005 UWMP, which was adopted in December 2005. Supplemental information from the City's latest Water Inventory Report (dated February 5, 2008) and other available reports has also been included to provide the most recent data available and to meet the specific requirements of SB 610.

DRAFT

Existing Potable Water Supplies

The City currently receives water supplies from three sources:

- Surface water from the Delta-Mendota Canal (Central Valley Project),
- Surface water from the Stanislaus River via the South County Water Supply Project (delivered by the South San Joaquin Irrigation District (SSJID)), and
- Groundwater pumped from eight groundwater wells located within the City.

Each of these existing supplies is described below and documentation regarding each supply (e.g., contracts and agreements) is provided in Appendix A of this WSA. Summary tables listing the City's existing and additional water supplies, and historical and anticipated future quantities are provided following the discussion of the City's additional water supplies. Figure 7 shows the City's historical use of these water supplies.

The City's Capital Improvement Plan (CIP) for the five-year period from Fiscal Year (FY) 2008/09 through FY 2012/13 for water system improvements to serve existing and future customers is provided in Appendix B.[8]

Central Valley Project Water via the Delta-Mendota Canal

In 1974, the City entered into a 40-year contract with the United States Bureau of Reclamation (USBR) for an annual entitlement of 10,000 af/yr of surface water from the Central Valley Project (CVP) via the Delta-Mendota Canal (DMC). In the CVP system, in accordance with the USBR's Central Valley Project Municipal and Industrial (M&I) Draft Water Shortage Policy dated September 11, 2001, an M&I contractor is eligible for 75 percent M&I reliability applied to the contractor's historical use, with certain adjustments. This M&I reliability may be reduced when allocation of Ag-reliability water is reduced below 25 percent of contract entitlement. The City's average allocations of M&I-reliability water in the last five years have been 89 percent of the City's contract entitlement[9]. In both 2007 and 2008, due to dry hydrologic conditions and regulatory restrictions, the allocations were 75 percent. As of April 21, 2009, due to environmental issues resulting in pumping restrictions in the Delta and on-going drought conditions, the USBR has set the 2009 South of Delta M&I deliveries at 60 percent of contract entitlement.

Recent litigation has created uncertainty regarding the reliability of water deliveries through the Bay-Delta. Most of this litigation addresses compliance with the federal and state endangered species acts (see, e.g., NRDC v. Kempthorne, and Watershed Enforcers v. DWR). In August 2007, the federal court in the Kempthorne case ordered that, as an interim remedy, Delta pumping be curtailed from late December through June to protect the Delta smelt (i.e., the

[8] CIP for FY 2008/09 to FY 2012/13 taken from City of Tracy Adopted Budget for FY 2008/09 (City of Tracy website: www.ci.tracy.ca.us).

[9] Based on USBR CVP South of Delta M&I allocations from 2004 to 2008.

Wanger Decision). In December 2008, a Biological Opinion regarding the Delta smelt was issued by the U.S. Fish and Wildlife Service which upheld the interim Delta pumping restrictions issued in August 2007 and made them permanent. A revised Biological Opinion related to three salmon species is still being developed and is anticipated in June 2009, and could contain different (possibly more stringent) Delta pumping restrictions. Also, early December 2008, the California Sportfishing Protective Alliance and others filed suit against Delta operations. This lawsuit was recently withdrawn, but similar arguments are expected before the State Water Resources Control Board. Should reductions occur that reduce the reliability of the City's CVP water supplies beyond what is anticipated as set forth in this WSA, the City would use the available groundwater supplies (see discussion below) to ensure an adequate water supply.

A copy of the City's contract with the USBR is included in Appendix A. The contract is due to expire in 2014. The City has agreed with the USBR to renew this contract prior to 2014. Contract negotiations are on-going and renewal is expected in late 2009 or 2010.

In 2004, the USBR approved assignment of 5,000 af/yr of Ag-reliability CVP contract entitlement to the City from the Banta Carbona Irrigation District (BCID). Also in 2004, the USBR approved assignment of another 2,500 af/yr of Ag-reliability CVP contract entitlement water to the City from the West Side Irrigation District (WSID), with the option to purchase an additional 2,500 af/yr of CVP contract entitlement from the WSID (see discussion of future supplies below). In 2004, the City received 1,865 acre-feet from the BCID assignment and 965 acre-feet from the WSID assignment. The City did not accept delivery from either assignment in 2005 or 2006. In 2007, the City received 2,477 acre-feet from the BCID assignment and 902 acre-feet from the WSID assignment. In 2008, the City received 1,961 acre-feet from the BCID assignment and 1,000 acre-feet from the WSID assignment.

Deliveries of Ag-reliability water can vary significantly, and during severe water shortages supply may be reduced as much as 100 percent. Average deliveries of Ag-reliability water during the last five years have been 69 percent of the contractual entitlement[10]. In 2006, there was a 100 percent allocation. However, in 2007, due to dry hydrologic conditions, there was only a 50 percent allocation, and in 2008, due to continued dry conditions and regulatory restrictions, there was only a 40 percent allocation. As of April 21, 2009, due to environmental issues resulting in pumping restrictions in the Delta and on-going drought conditions in California, the USBR has set the 2009 deliveries of South of Delta Ag-reliability water to a 10 percent allocation.

Copies of the assignment agreements between the City and BCID and WSID are included in Appendix A.

The City's CVP water supplies are treated at the City's John Jones Water Treatment Plant (JJWTP), which was constructed in 1979, expanded in 1988, and then expanded again in 2008. The JJWTP is located just north of the Delta-Mendota Canal in the southern portion of the City.

[10] Based on USBR CVP South of Delta Ag allocations from 2004 to 2008.

With the recent plant expansion now complete, the current treatment capacity of the JJWTP is 30 million gallons per day (mgd).

The City also treats and serves CVP/DMC water purchased by others. In 2005, an estimated 407 acre-feet of water from the Plain View Water District (PVWD) (now Byron Bethany Irrigation District (BBID)) USBR allocation was treated at the City's JJWTP and delivered to the Patterson Pass Business Park using the City's water transmission/distribution system. A comparable quantity of BBID CVP/DMC water is anticipated to be delivered annually to the Patterson Pass Business Park in the future. A copy of the agreement between the City and PVWD for this water supply, treatment and wheeling is included in Appendix A.

Stanislaus River Water

The City, in partnership with the cities of Manteca, Lathrop and Escalon, and the South San Joaquin Irrigation District (SSJID), have constructed a surface water treatment plant near Woodward Reservoir in Stanislaus County, and transmission pipeline to deliver treated surface water to each city. The project was called the South County Water Supply Project (SCWSP). This water supply is based on SSJID's senior pre-1914 appropriative water rights to the Stanislaus River, coupled with an agreement with the USBR to store water in New Melones Reservoir. As part of the SCWSP, the City has been allocated up to 10,000 af/yr of water.

Water deliveries commenced in 2004, and deliveries have been essentially uninterrupted since then. In 2005, the City received 3,146 af from the SCWSP; in 2006, the City received 8,918 af from the SCWSP; in 2007, the City received 9,130 af from the SCWSP; and in 2008, the City received 8,017 af from the SCWSP. These recent SCWSP deliveries were less than the City's full entitlement; however, during these years the City did not require its full SCWSP entitlement, even though the full 10,000 af was available from SCWSP. The SCWSP is expected to have high reliability, with the City anticipating being able to receive at least 90 percent of its allocation, even during dry years. This water supply from SSJID is considered to be a wholesale water supply. A copy of the agreement between the City and SSJID for this water supply is included in Appendix A.

Groundwater

10910(f) If a water supply for a proposed project includes groundwater, the following additional information shall be included in the water supply assessment.

10910(f)(1) *A review of any information contained in the urban water management plan relevant to the identified water supply for the proposed project.*

10910(f)(2) *A description of any groundwater basin or basins from which the proposed project will be supplied. For those basins for which a court or the board has adjudicated the rights to pump groundwater, a copy of the order or decree adopted by the court or the board and a description of the amount of groundwater the public water system, or the city or county if either is required to comply with this part pursuant to subdivision (b), has the legal right to pump under the order or decree. For basins that have not been adjudicated, information as to whether the department has identified the basin or basins as overdrafted or has projected that the basin will become overdrafted if present management conditions continue, in the most current bulletin of the department that characterizes the condition of the groundwater basin, and a detailed description by the public water system, or the city or county if either is*

required to comply with this part pursuant to subdivision (b), of the efforts being undertaken in the basin or basins to eliminate the long-term overdraft condition.

10910(f)(3) *A detailed description and analysis of the amount and location of groundwater pumped by the public water system, or the city or county if either is required to comply with this part pursuant to subdivision (b), for the past five years from any groundwater basin from which the proposed project will be supplied. The description and analysis shall be based on information that is reasonably available, including, but not limited to, historical use records.*

10910(f)(4) *A detailed description and analysis of the amount and location of groundwater that is projected to be pumped by the public water system, or the city or county if either is required to comply with this part pursuant to subdivision (b), from any basin from which the proposed project will be supplied. The description and analysis shall be based on information that is reasonably available, including, but not limited to, historical use records.*

10910(f)(5) *An analysis of the sufficiency of the groundwater from the basin or basins from which the proposed project will be supplied to meet the projected water demand associated with the proposed project.*

A water assessment shall not be required to include the information required by this paragraph if the public water system determines, as part of the review required by paragraph (1), that the sufficiency of groundwater necessary to meet the initial and projected water demand associated with the project was addressed in the description and analysis required by paragraph (4) of subdivision (b) of Section 10631.

Groundwater Overview

The City overlies a portion of the San Joaquin Valley Groundwater Basin-Tracy Sub-basin (Tracy Sub-basin). The City operates eight groundwater wells, with a total extraction capacity of 15 mgd. Four wells (Production Wells 1, 2, 3 and 4) are located near the City's JJWTP and pump directly into the JJWTP clearwells, where the groundwater is blended with treated surface water. The other wells (Lincoln Well, Lewis Manor Well (Well 5), Ball Park Well (Well 6), and Park and Ride Well (Well 7)) are located throughout the City and pump water directly into the distribution system after disinfection. Figure 8 shows the locations of the City's wells and the Tracy Sub-basin.

Basin Description

The following section describes the Tracy Sub-basin, including its water-bearing formations, water levels, and water quality. Much of the following information has been incorporated from the City's UWMP. Except where noted, the description of the sub-basin is based largely on information provided in the 2003 California DWR Bulletin 118, in which the groundwater basin description was last updated in January 2006 (see Appendix C).

The sub-basin consists of unconsolidated to semi-consolidated sedimentary deposits that are bounded by the Diablo Range on the west, the Mokelumne and San Joaquin Rivers on the north, the San Joaquin River to the east, and the San Joaquin-Stanislaus County line on the south. Adjacent to the Tracy Sub-basin are the Eastern San Joaquin Sub-basin to the east, the Delta-Mendota Sub-basin to the south, and the Sacramento Valley Groundwater Basin to the north. The three sub-basins, not including the Sacramento Valley Groundwater Basin, are part of the San Joaquin Valley Groundwater Basin. The San Joaquin River and one of its major west side tributaries, Corral Hollow Creek, provide drainage from the Tracy Sub-basin. The San

Joaquin River flows northward into the Sacramento and San Joaquin Delta and discharges into San Francisco Bay.

The Tracy Sub-basin is comprised of continental deposits of Late Tertiary to Quaternary age. These deposits include the Tulare Formation, Older Alluvium, Flood Basin Deposits, and Younger Alluvium. The cumulative thickness of these deposits increases from a few hundred feet near the Coast Range foothills on the west to about 3,000 feet along the eastern margin of the sub-basin.

Each of these formations is described below.

- The Tulare Formation is exposed in the Coast Range foothills along the western margin of the sub-basin and dips eastward toward the axis of the San Joaquin Valley. The Tulare Formation is approximately 1,400 feet thick and consists of semi-consolidated, poorly sorted, discontinuous deposits of clay, silt, and gravel. The Corcoran Clay occurs near the top of the Tulare Formation and confines the underlying fresh water deposits. The eastern limit of the Corcoran Clay is near the eastern boundary of the sub-basin. The Tulare Formation is moderately permeable, with most of the larger agricultural, municipal, and industrial wells completed below the Corcoran Clay and capable of producing up to about 3,000 gallons per minute (gpm). Smaller, domestic wells are typically completed above the Corcoran Clay, where the groundwater is often of poor quality. Specific yield values for the Tulare Formation in the San Joaquin Valley and Delta area range from 7 to 10 percent.
- The Older Alluvium is approximately 150 feet thick and consists of loosely to moderately compacted sand, silt, and gravel deposited in alluvial fans during the Pliocene and Pleistocene eras. The Older Alluvium is widely exposed between the Coast Range foothills and the Delta and is moderately to locally highly permeable.
- The Flood Basin Deposits occur in the Delta portion of the sub-basin and are the distal equivalents of the Tulare Formation and Older and Younger alluvial units. The Flood Basin Deposits consist primarily of silts and clays with occasional interbeds of gravel along the present waterways. Because of their fine-grained nature, the Flood Basin Deposits have low permeability and generally yield low quantities of water to wells. Occasional zones of fresh water are found in the Flood Basin Deposits, but they generally contain poor quality groundwater. The maximum thickness of the Flood Basin Deposits is about 1,400 feet.
- The Younger Alluvium includes those deposits that are currently accumulating, including sediments deposited in the channels of active streams, as well as overbank deposits and terraces of these active streams. The Younger Alluvium, consisting of unconsolidated silt, fine- to medium-grained sand, and gravel, is present to depths of less than 100 ft below ground surface (bgs) along the channel of Corral Hollow Creek. Sand and gravel zones in the Younger Alluvium are highly permeable and, where saturated, yield significant quantities of water to wells.

The Tracy Sub-basin is primarily separated into two aquifers: unconfined and confined. The unconfined aquifer is primarily comprised of the alluvium and flood basin formations. The

DRAFT

confined aquifer is primarily comprised of the Tulare Formation and it is overlain by the Corcoran Clay. The City's production wells pump groundwater from the confined aquifer only. As such, the following discussion focuses on the characteristics of the confined aquifer.

Discussion of the unconfined aquifer is provided under the section ***Additional (Future) Non-Potable Water Supplies.***

Groundwater Level Trends

The potentiometric surface in the confined aquifer located below the Corcoran Clay is located approximately 90 to 150 ft above mean sea level (msl). Review of hydrographs from wells throughout the sub-basin indicate that, except for seasonal variation resulting from recharge and pumping, water levels in most of these wells have remained stable over at least the last 10 years. As discussed below, as part of the City's Groundwater Management Policy, groundwater levels in the Tracy area are being monitored by the City on a semi-annual basis. These measurements indicate that groundwater levels in the City's wells have increased over the last few years, likely as a direct result of reduced groundwater pumpage by the City since 2005.

Groundwater Storage

There are no published groundwater storage values for the entire sub-basin (DWR, 2003). However, Hotchkiss and Balding (1971) estimated the groundwater storage capacity for the Tracy-Patterson Storage Unit at 4,040,000 af. The Tracy-Patterson Storage Unit includes the southern portion of the currently-defined Tracy Sub-basin, from approximately one mile north of Tracy to the San Joaquin-Stanislaus County line. Since the Tracy Sub-basin comprises roughly one-third of the Tracy-Patterson Storage Unit, it can be inferred that the approximate storage capacity of the Tracy Sub-basin is on the order of 1,300,000 af.

In an eight-year study conducted by Stoddard & Associates (1996), the average change in the entire sub-basin storage was approximately negative 13,000 af per year. Stoddard & Associates (1996) indicates a major contributor to this sub-basin storage decline was reduced rainfall, (rainfall during the study period was well below average). Stoddard concluded that the sub-basin is in a hydrologically-balanced condition and is not overdrafted[11]. Similarly, DWR has not identified the Tracy Sub-basin as being in an overdrafted condition (per Bulletin 118 Basin Description dated January 2006—see Appendix C).

Groundwater Yield

A 1990 Kennedy/Jenks/Chilton (K/J/C) study estimated a groundwater yield of 6,700 af/yr within the Tracy area. However, in 2001, to determine if additional groundwater resources were available in the Tracy area, the City conducted an updated groundwater analysis. The Estimated Groundwater Yield Study, prepared by Bookman-Edmonston Engineering (included as an appendix to the City's Groundwater Management Policy Mitigated Negative Declaration--see Appendix C), provided an evaluation of potential groundwater yield and determined that a

[11] Page 23, City of Tracy UWMP, December 2005.

2,300 af/yr increase of the average annual operational groundwater yield above the groundwater yield recommended in the 1990 K/J/C study could be provided within the estimated sustainable yield of the groundwater basin in the Tracy area, without adverse impact to groundwater resources or quality in the Tracy area over a 50-year timeframe. This expansion of groundwater usage to 9,000 af/yr would be within the City's estimated share of the aquifer's sustainable yield of 22,000 af/yr of the 28,000 af/yr total (which includes groundwater usage by West Side Irrigation District, Naglee-Burk Irrigation District, Plain View Water District (now part of the Byron Bethany Irrigation District), and Banta-Carbona Irrigation District). It was also estimated that this expansion of groundwater usage would result in a groundwater level drop of 10 feet, but would stabilize at this level.

The Estimated Groundwater Yield Study was based on quantitative and qualitative analyses, historical rates of groundwater use and changes in groundwater conditions, as well as utilization of prior groundwater studies including the following:

- G.H. Davis, et al., Groundwater Conditions and Storage Capacity in the San Joaquin Valley, California, USGS Water Supply Paper 1469, 1959.
- W.R. Hotchkiss and G.O. Balding, Geology, Hydrology, and Water Quality of the Tracy-Dos Palos Areas, San Joaquin Valley, California, USGS Open File Report 72-169, August 6, 1971.
- USGS, Groundwater Flow in the Central Valley, California, Regional Aquifer System Analysis, Professional Paper 1401-D.
- K/J/C, Tracy Area Groundwater Yield Evaluation: Final Report, November 1990.

The Estimated Groundwater Yield Study also considered cumulative groundwater usage in the study area by the City and adjacent irrigation districts, including:

- West Side Irrigation District,
- Naglee-Burk Irrigation District,
- Plain View Water District (now part of the Byron Bethany Irrigation District), and
- Banta-Carbona Irrigation District.

Groundwater Quality

Groundwater quality in the sub-basin varies spatially and with depth. In general, the northern part of the sub-basin is characterized by a sodium water type, and the southern part of the Sub-basin is characterized by calcium-sodium type water (Sorenson, 1981). The northern part of the Sub-basin is also characterized by a wide range of anionic water types, including bicarbonate; chloride; and mixed bicarbonate-chloride. Major anions in the southern part of the sub-basin include sulfate-chloride and bicarbonate-chloride.

There is also a difference between the water quality in the water-bearing zones above the Corcoran Clay (termed the "semi-confined aquifer") and below the Corcoran Clay (termed the "confined aquifer") (Stoddard, 1996). Generally, the water quality of the confined aquifer is

DRAFT

better than that of the semi-confined aquifer (Stoddard, 1996). Total dissolved solids (TDS) concentrations in well water sampled in the semi-confined aquifer ranged between 1,000 milligrams per liter (mg/L) and 1,500 mg/L, while the measured TDS in the confined aquifer was less than 1,000 mg/L (Stoddard, 1996). In the vicinity of Tracy, the TDS of the confined aquifer is between 600 mg/L and 700 mg/L (Stoddard, 1996).

Constituents present at elevated concentrations throughout the sub-basin in both the semi-confined and confined aquifers include chloride, nitrate, sulfate, and boron. Elevated chloride occurs in several areas near Tracy and along the San Joaquin River. Areas of elevated nitrate occur in the northwestern part of the sub-basin and in the vicinity of Tracy. Elevated boron occurs over a large portion of the sub-basin from south of Tracy extending to the northwest side of the sub-basin. Sulfate concentrations of up to 500 mg/L have been detected in sub-basin groundwater. The groundwater near Tracy is considered to be very hard (Stoddard, 1996).

Groundwater Management

The 1992 Groundwater Management Act, AB 3030, established provisions by which local water agencies could develop and implement groundwater management plans (GMPs). GMPs are generally designed to prevent local and regional aquifer overdrafting, which reduces available groundwater resources and which, under certain conditions, can lead to degradation of water quality and to land subsidence. The City has been, and continues to be, involved in both regional and local groundwater management efforts.

Groundwater Management Plan for the Northern Agencies in the Delta-Mendota Canal Service Area and a Portion of San Joaquin County

The City participated in the development of a Groundwater Management Plan for the entire Tracy Sub-basin in 1996, called the Groundwater Management Plan for the Northern Agencies in the Delta-Mendota Canal Service Area and a Portion of San Joaquin County (Tracy Sub-basin GMP), and is currently involved in the updating of this document. A description of the objectives and content of the Tracy Sub-basin GMP is provided below, with excerpts included in Appendix C.

The Tracy Sub-basin GMP was prepared by Stoddard & Associates in 1995 and 1996, in response to concerns regarding the declining quality of sub-basin groundwater. The preparation of the Tracy Sub-basin GMP was coordinated by the San Luis and Delta-Mendota Water Authority. Other participants in the development and implementation of the Tracy Sub-basin GMP include the agencies that overlie and, in some cases, extract water from the Tracy Sub-basin within the DMC/CVP's northern service area. These agencies include the Plain View Water District (now part of the Byron-Bethany Irrigation District), Banta-Carbona Irrigation District, Del Puerto Water District, West Stanislaus Irrigation District, Patterson Water District, West Side Irrigation District, and the San Joaquin County Flood Control and Irrigation District.

Based on a hydraulic inventory of the sub-basin, the Tracy Sub-basin GMP is designed to monitor groundwater impacts to the sub-basin and to promote the sustained use of groundwater resources. The Tracy Sub-basin GMP discusses the following issues:

- Control of saline water intrusion,
- Identification and management of wellhead protection areas,
- Migration of contaminants in groundwater,
- Administration of a well abandonment and well destruction program,
- Mitigation of groundwater overdraft,
- Replenishment of extracted groundwater,
- Monitoring of groundwater levels and storage,
- Facilitation of conjunctive use,
- Well construction,
- Construction and operation of groundwater management facilities,
- Relationships with State and Federal regulating agencies, and
- Review of land use plans to assess risk of groundwater contamination.

The Tracy Sub-basin GMP was updated in 2007 to present new data related to water levels and water quality, and to bring the document into compliance with SB 1938, which was passed in 2002. SB 1938 established criteria for topics to be included in a GMP, including: (1) establishment of Basin Management Objectives (BMOs); (2) involvement of other local agencies in a cooperative planning effort; and (3) adoption of monitoring protocols that promote efficient and effective groundwater management.

San Joaquin County Groundwater Export Ordinance

Drought conditions and on-going restrictions on Delta export pumping have reduced the imported CVP surface water supply available to entities located south of the Delta that rely on DMC/CVP water (Stoddard, 1996). Arrangements for water transfers between entities that receive DMC/CVP water were developed to allocate the reduced DMC/CVP supply to match demand, including pumping of groundwater into the DMC for conveyance and use in other areas. This additional groundwater extraction, for the purpose of selling it to other DMC/CVP users, raised concerns amongst sub-basin groundwater users regarding groundwater overdraft and quality degradation. In response to these concerns, San Joaquin County enacted a Groundwater Export Ordinance in June 2000 that now requires an entity to secure a permit from San Joaquin County prior to exporting groundwater out of the County (such as by pumping extracted groundwater into the DMC for conveyance to other areas).

City Groundwater Management Policy and Mitigated Negative Declaration

On a local level, in 2001, the City adopted a Groundwater Management Policy, and prepared a Groundwater Management Policy Mitigated Negative Declaration (see Appendix C). The Groundwater Management Policy and the Groundwater Management Policy Mitigated Negative Declaration are described below.

As discussed above, in 2001, the City anticipated that, to make up a projected temporary shortfall between supply and demand, groundwater extraction would have to increase from approximately 6,000 af/yr to a maximum of 9,000 af/yr over the three-year period from 2001 through 2004. Prior to 2001, it had been estimated that 6,700 af/yr was the City's sustainable groundwater extraction rate (K/J/C, 1990). However, as discussed above, the 2001 Estimated Groundwater Yield Study by Bookman-Edmonston, revised the estimated average annual operational groundwater yield to 9,000 af/yr. This operational yield, though larger than the earlier estimate, is still well under the City's estimated 22,000 to 28,000 af/yr share of the sub-basin's sustainable yield (PMC, 2001).

Pursuant to the findings of the 2001 Bookman-Edmonston study, the Tracy City Council adopted a Groundwater Management Policy in 2001 that established the City's maximum annual groundwater extraction rate of 9,000 af/yr. To comply with CEQA and to evaluate the potential negative effects of increased groundwater extraction on water quality, water levels, and subsidence, the City also prepared a Groundwater Management Policy Mitigated Negative Declaration (see Appendix C). The Groundwater Management Policy Mitigated Negative Declaration specifies the frequency and type of monitoring and reporting the City must conduct to evaluate the sustainability of the increased groundwater extraction rate.

Consistent with the Groundwater Management Policy Mitigated Negative Declaration, the City has maintained groundwater production rates well below the estimated sustainable yield of 9,000 af/yr. In addition, the City hired Bookman to monitor the impacts of the increased groundwater extraction on groundwater levels, groundwater quality, and land subsidence. Excerpts from Bookman's most recent Mitigation Monitoring Report dated January 23, 2009 covering the period from November 2007 through November 2008 are provided in Appendix C. The report includes well production data, water quality data, hydrographs, and groundwater contour maps for the City's production and monitoring wells. As described in the report, there is no indication that pumping by the City is significantly or adversely affecting groundwater levels or water quality at this time. In fact, the report shows that groundwater levels in the City's wells have increased over the last couple of years, likely as a direct result of decreased groundwater pumpage by the City in since 2005.

Tracy Regional Groundwater Management Plan (Regional City GMP)

In addition to participating in the development of the Tracy Sub-basin GMP, in 2005 the City was awarded a DWR grant for approximately $185,000 to prepare a Tracy Regional Groundwater Management Plan (Tracy Regional GMP) for the portion of the Tracy Groundwater Sub-basin that underlies the City of Tracy. The Tracy Regional GMP was completed in March 2007. A key objective of the Tracy Regional GMP was the development of Basin Management Objectives (BMOs) for groundwater levels, groundwater quality, and land subsidence in the region.

Key results of the Tracy Regional GMP planning process included the following:

- Developing general consensus among Tracy Sub-basin stakeholders regarding the characterization of the area's water problems, existing and future demands, and groundwater conditions;

DRAFT

- Documenting the area's groundwater management goals and objectives, including specific BMOs, to help measure progress in attaining goals;
- Developing specific solutions and common programs for the Tracy Sub-basin;
- Development management plan components to maintain groundwater quality and prevent land subsidence in the basin; and
- Providing an implementation plan to direct future groundwater management activities.

Excerpts from the Tracy Regional GMP are provided in Appendix C.

Historical Groundwater Use

As discussed previously, the City currently operates eight groundwater extraction wells (see Figure 8):

- Well 1 (at JJWTP)
- Well 2 (at JJWTP)
- Well 3 (at JJWTP)
- Well 4 (at JJWTP)
- Lincoln Well
- Well 5 (Lewis Manor Well)
- Well 6 (Ball Park Well)
- Well 7 (Park & Ride Well)

The City constructed a new, ninth well in January 2004 (Well 8) that is ultimately intended for use with the City's future Aquifer Storage and Recovery Program; however this well is not yet equipped or operational[12] (see discussion below under ***Additional (Future) Potable Water Supplies***).

Historically, groundwater has accounted for approximately 40 to 50 percent of the City's annual water supply. Prior to 2000, groundwater extraction by the City totaled less than 6,000 af/yr. Between 2000 and 2004, to meet increased demands for water, the City began extracting additional groundwater, with annual usage ranging from 6,548 to 7,717 af/yr. In 2005, groundwater extraction decreased to less than 6,000 af/yr primarily because: (1) the SCWSP was completed and the City began receiving Stanislaus River water; and (2) rainfall was above normal, meaning that the City received a higher percentage of its DMC/CVP contractual

[12] The City plans to equip and have Well 8 operational by late 2009. Well 8 will initially be operated as an extraction well (to be used to serve demand directly under normal and/or emergency conditions). In the future, once approved by the RWQCB, the well will be operated as an injection/extraction well as part of the City's planned future Aquifer Storage and Recovery Program.

DRAFT

entitlements. In 2006, groundwater extraction was only 3,034 af/yr. This was again due to the availability of the SCWSP surface water supplies and higher-than-normal winter precipitation. In 2007, groundwater extraction was 3,672 af/yr, and in 2008 groundwater production was 2,598 af/yr. A summary of total groundwater produced for the last eight years is provided in Table 12.

Table 12. City of Tracy Historical Groundwater Production[a]

	2001	2002	2003	2004	2005[b]	2006[c]	2007[d]	2008[e]
Total Groundwater Production, af/yr	7,321	7,717	6,878	6,889	5,826	3,034	3,672	2,598

[a] Source: Table 10 Groundwater Well Production, City of Tracy 2005 UWMP, December 2005.
[b] 2005 data from City of Tracy Water Inventory Report, August 1, 2006.
[c] 2006 data from City of Tracy Water Inventory Report, February 6, 2007.
[d] 2007 data from City of Tracy Water Inventory Report, February 5, 2008.
[e] 2008 data from City of Tracy water production data.

As noted above, other groundwater users in the Tracy area include the West Side Irrigation District, Naglee-Burk Irrigation District, Plain View Water District (now the Byron Bethany Irrigation District), Banta-Carbona Irrigation District. Although current groundwater pumpage by these users was not available for inclusion in this WSA, the 2001 Estimated Groundwater Yield Study, which established the City's estimated groundwater yield of 9,000 af/yr, considered the cumulative groundwater usage in the study area by the City and other users.

Projected Future Groundwater Use

As discussed above, the 2001 Estimated Groundwater Yield Study indicated an average annual operational groundwater yield for the City of 9,000 af/yr. The study indicated that this increase in the City's groundwater yield was within the estimated sustainable yield of the groundwater basin within the Tracy area and could be maintained without adverse impact to groundwater resources or quality in the Tracy area over a 50-year timeframe. However, because the hard, high-TDS groundwater is of poorer quality compared with the City's surface water sources, the City is planning to scale back its future groundwater extraction during normal years. However, the City will continue to rely on groundwater for peaking, drought, and emergency supplies, and may pump up to 9,000 af/yr or more during single dry or multiple dry years, as needed, to meet demands when surface water supplies may be limited.

The City's existing groundwater wells currently have the capability of pumping 9,000 af/yr. The City has recently replaced a number of older wells with new wells (e.g., the Tidewater Well, the Ball Park Well, and the Park and Ride Well). Well 8, ultimately intended for use with the City's future Aquifer Storage and Recovery Program (see further discussion below), was constructed in 2004, and is planned to be equipped by the end of 2009, for initial use as an extraction well to serve demand directly under normal and/or emergency conditions. In the future, the City will construct new production and emergency supply wells, as needed, to replace and supplement existing, aging production wells and provide additional supply reliability in the event of a drought or other emergency situation. Table 13 shows the anticipated total extraction during a

DRAFT

normal year, which may decrease to approximately 4,000 af/yr by 2010 and to 2,500 af/yr by 2015.

Table 13. City of Tracy Projected Future Groundwater Production in Normal Years[(a)]

	2010	2015	2020	2025	2030
Total Groundwater Production, af/yr[(b)]	4,000	2,500	2,500	2,500	2,500

(a) Source: Table 11 Current and Projected Water Supply Allocations-Normal Year, City of Tracy 2005 UWMP, December 2005.

(b) Although the City can sustainably extract up to 9,000 af/yr of groundwater, the City is planning to scale back its groundwater extraction in future years to increase the overall quality of its water supply. The City will continue to rely on groundwater for peaking and drought and emergency supplies, up to 9,000 af/yr, on an as-needed basis.

By reducing groundwater extraction on an average annual basis, the City will increase the overall quality of its drinking water, thus increasing customer satisfaction and reducing system maintenance and repair caused by the lower-quality groundwater; and recharge the underlying aquifer, effectively increasing the availability of groundwater during a drought or emergency condition (i.e., the City will effectively be "banking" its groundwater). These potential uses of groundwater during droughts are consistent with Tracy's Groundwater Management Policy (discussed above). In the event that the City is unable to secure additional high quality surface water supplies in the future, groundwater remains a sustainable water supply up to 9,000 af/yr.

If the City decreases future groundwater extraction during normal and wet years, the current patterns of water levels, groundwater flow directions, and groundwater quality would be expected to change correspondingly. Further, if the City moves ahead with its proposed ASR program (see discussion below), changes in groundwater flow patterns associated with the introduction of treated water into the confined aquifer zone may occur. In this way, a focused groundwater recharge area would be created. Groundwater quality would be expected to improve as a result of the introduction of higher quality surface water into the aquifer.

Groundwater Sufficiency

The City's 2005 UWMP addressed the sufficiency of the City's groundwater supplies, in conjunction with the City's other existing and additional water supplies, to meet the City's existing and planned future uses[13]. Based on the information provided above and that included in the City's 2005 UWMP, the City's groundwater supply is sufficient to meet the water demands of the Proposed Project, in addition to the City's existing and planned future uses. As discussed above, the City's use of groundwater over the last few years has declined, primarily due to the availability of new high-quality surface water supplies from the SCWSP. In the future, although the City can sustainably extract up to 9,000 af/yr of groundwater, the City's use of groundwater is anticipated to decrease even further, as additional high-quality surface water

[13] Chapter 4, City of Tracy Urban Water Management Plan, December 2005.

supplies become available. As shown in Table 13, in the future, assuming normal year hydrologic conditions, annual groundwater use is anticipated to be as low as 2,500 af/yr by 2015. This anticipated future groundwater pumpage is significantly below the City's historical groundwater pumpage (see Table 12) and the average annual operational yield of 9,000 af/yr.

By reducing groundwater extraction on an average annual basis, the City will recharge the underlying aquifer, effectively increasing the availability of groundwater during a drought or emergency condition (i.e., the City will effectively be "banking" its groundwater); and increase the overall quality of its drinking water, thus increasing customer satisfaction and reducing system maintenance and repair caused by the lower-quality groundwater.

Out-of-Basin Water Banking (Pilot Agreement)

The Semitropic Groundwater Storage Bank (Semitropic) is a water storage system that began operation in the early 1990s. Located in Kern County between the California Aqueduct and the Delta-Mendota Canal, Semitropic is one of eight California groundwater banking agencies. Semitropic works by having its banking partners deliver their surplus water to Semitropic for storage. Then, when requested by the banking partner, Semitropic returns the stored water to the California Aqueduct for use by its partners either by exchanging its entitlement or by reversing the intake facility (known as "pumpback"). Through "pumpback", Semitropic can deliver a maximum of 90,000 af/yr of water into the California Aqueduct. The State would then deliver the water to the banking partners.

The current Semitropic banking partners and their reserved storage capacities are listed below[14]:

- Metropolitan Water District of Southern California: 350,000 af
- Santa Clara Valley Water District: 350,000 af
- Alameda County Water District: 150,000 af
- Zone 7 Water Agency: 65,000 af
- Newhall Land and Farming Company: 55,000 af
- Vidler Water Company: 30,000 af

An additional 200,000 af of reserved storage is available to all banking partners. Based on a total storage capacity of 1.65 million af, 450,000 af of available storage remains.

In June 2006, the City entered into a pilot agreement with the Semitropic Water Storage Bank (Semitropic) for 1,000 acre-feet of water storage (with withdrawals up to 333 af/yr) at Semitropic. The pilot agreement was intended to establish the procedures for deposits and withdrawals by the City of Tracy. To date, the City has deposited 1,000 af of supplies in Semitropic and has withdrawn 200 af (100 af in November 2007 and 100 af in December 2008). These supplies are available to the City (up to 333 af/yr) for withdrawal in dry years, if needed.

[14] Based on information provided on Semitropic Water Storage District website: www.semitropic.com, October 2008.

DRAFT

A copy of the City's pilot agreement with Semitropic is included in Appendix A. Once the permanent agreement with Semitropic is implemented, this pilot agreement will be terminated.

Additional (Future) Potable Water Supplies

The City is currently anticipating the following additional potable water supplies in the future:

- Out-of-basin water banking (Semitropic Water Storage Bank);
- Additional surface water from the Delta-Mendota Canal (Central Valley Project);
- Surface water from BBID pre-1914 water rights; and
- Aquifer Storage and Recovery.

Each of these additional potable water supplies is described below. Summary tables listing the City's existing and additional water supplies, and historical and anticipated future quantities are provided at the end of this section.

Out-of-Basin Water Banking (Permanent Agreement)

In the future, the City anticipates entering into a long-term agreement with Semitropic for 3,500 units of water storage. One unit of water storage allows for a withdrawal of 1 af/yr for three years; hence, the agreement would allow for withdrawal of 3,500 af/yr for three years (10,500 af total). To store water in Semitropic, the City would not withdraw its share of CVP water from the DMC, but instead allow this water to continue to move through the DMC and California Aqueduct systems for delivery to and use by Semitropic. This is called "in lieu storage." Upon request by the City, in accordance with the contract, Semitropic would pump the stored water into the California Aqueduct and a like amount of water would be made available to the City directly from the DMC. Though the City could utilize this supply in any year, it would be most valuable during drought years when the City's CVP surface water supplies are reduced. If the City uses water from the Semitropic water bank in any given year, it would work to manage its supplies during subsequent years such that it could "refill" its water bank for future water use. By banking water at Semitropic, the City will increase the quantity of supplies available during drought and/or other emergency conditions, thereby increasing the reliability of its water supply.

A permanent water banking arrangement with Semitropic will require an agreement with Semitropic, confirmation that the USBR has no objection, compliance with National Environmental Policy Act (NEPA) requirements, and compliance with CEQA requirements. The cost of the supply agreement is estimated to be approximately $5 million, which is anticipated to be financed through a loan from Semitropic. An amount of $4.5 million has been included in the City's Capital Improvement Program (CIP) future appropriations for FY09-10 to complete the permanent agreement (CIP 7593). The City anticipates that this permanent

DRAFT

agreement with Semitropic will be in place by 2010. Once the permanent agreement is in place, the City anticipates an annual maintenance cost of $26,300.[15]

Additional Central Valley Project Water via the Delta-Mendota Canal

Additional CVP Supplies from WSID

As previously mentioned, the City has an option for an additional assignment of 2,500 af/yr of Ag-reliability CVP contract entitlement water from the WSID. This assignment will be exercised in conjunction with the City's Downtown Specific Plan Project to supplement the City's existing water supplies, and ensure adequate water supplies to meet the demands of existing users and approved and anticipated projects under all hydrologic conditions.

Per the agreement with WSID, the City can execute this assignment at any time before midnight on February 27, 2014. Environmental review and all other required reviews and approvals for this assignment have been completed. A copy of the City's agreement for assignment with WSID, including this option, is included in Appendix A. An amount of $2.125 million has been included in the City's CIP future appropriations for FY11-12 (CIP 7561) for this water supply assignment from WSID.[16]

Additional CVP Supplies from BBID

The area served by the former Plain View Water District (PVWD) is now part of BBID. Due to on-going urbanization in portions of BBID's service area, BBID anticipates that it may have CVP contract entitlement available for municipal uses in the future. The City and BBID are negotiating a phased option agreement to assign portions of BBID's CVP/DMC contract right to the City. The estimated quantity of contract entitlement water potentially subject to such an agreement is approximately 11,000 af/yr. The exact quantity of BBID CVP water entitlement is the subject of the future agreement between the City and BBID. However, previous discussions have indicated that a contract entitlement quantity of water equal to 3.4 acre-feet per year per acre of converted agricultural land may be available for M&I use.

It is estimated that an agreement between the City and BBID can be achieved in the next year or so to allow for additional CVP supplies to be available to the City by 2010. An approval will be required from the USBR, and compliance with CEQA and NEPA will be required. The estimated cost for the additional supply is $1,500 per acre-foot. Because the exact quantity of water available and terms of a future agreement are yet to be negotiated, the total cost and financing mechanisms for acquiring this supply have not yet been determined.

Surface Water from BBID Pre-1914 Water Rights

Part of the proposed Tracy Hills Specific Plan area was annexed into the Byron Bethany Irrigation District (BBID) and is entitled to water service from BBID, using that District's

[15] Source: City of Tracy Capital Improvement Program for FY08-09 through FY12-13.

[16] Source: City of Tracy Capital Improvement Program for FY08-09 through FY12-13.

pre-1914 appropriative water rights. The City anticipates that up to 3,000 af/yr of pre-1914 water rights water will be provided by BBID directly (using a pipeline delivery system) or via an exchange program to serve the proposed Tracy Hills Project in the BBID service area, as this project develops and demands ramp up. Because the water supply is based on pre-1914 appropriative rights, the supply is considered to be firm and well-established. Future work to secure this water source includes: finalizing agreements between the City and BBID; completion of environmental documentation; and, if BBID water is to be used directly, construction of a new intake facility, construction of an 11-mile transmission pipeline from BBID, and/or execution of a wheeling agreement with the owner of an existing conveyance facility (such a wheeling agreement may require approvals from DWR and/or USBR depending upon how the water is to be wheeled) to convey the water supply to the City's recently expanded JJWTP for treatment. The conveyance mechanism will need to meet the City's reliability criteria. Conveyance may also be accomplished via an exchange with another water user.

Costs for the obtaining the water supply will depend in part on the conveyance method chosen to deliver the water from BBID to the City's JJWTP for treatment and use at the Tracy Hills Project, and will be paid by the Tracy Hills Project developer. Required reviews and approvals will depend on the conveyance method, but will likely include the following entities: the City, Tracy Hills Project developer, BBID, DWR, USBR, and any exchange partner.

The planning, design and construction of the conveyance pipeline (if that conveyance option is chosen) will take a minimum of two years to complete once design is initiated. The City and the developer of the Tracy Hills Project are exploring conveyance options with BBID, DWR and USBR, and anticipate that this water supply source could come on-line by 2015.

Aquifer Storage and Recovery

The City's proposed Aquifer Storage and Recovery (ASR) program would allow the City to optimize conjunctive use of its water supplies through injection of treated (potable) drinking water into selected aquifer zones within the groundwater sub-basin for storage when surplus supplies are available, and recovery of that potable water from the aquifer to optimize water quality, meet seasonal peak demands, during drought periods, or when emergency or disaster scenarios preclude the use of imported water supplies.

As discussed above, the City constructed a new well in January 2004 (Production Well 8) (CIP 7558) that was designed to allow for both injection and extraction of water supplies in conjunction with the City's proposed ASR Program. In early 2009, the City contracted to construct the above-ground well facilities (including the pump house, pump, motor, SCADA, electrical, telemetry, chemical feed systems, etc.) to have Well 8 operational by late 2009. In addition, the City has already installed a number of monitoring wells for use in the demonstration project monitoring and testing for the proposed ASR Program.

The City is continuing to pursue regulatory approval for the ASR demonstration program from the Central Valley Regional Water Quality Control Board (RWQCB). Once the City completes the demonstration program (pilot testing), prepares required environmental documentation, and secures the required permits to operate an ASR Well Program, it is estimated that as much as

685 to 915 af/yr of potable water could be injected into the aquifer, assuming a 5-month continuous injection rate of 1.5 to 2.0 mgd. The City anticipates that, under an ASR program, approximately 3,000 acre-feet of high-quality groundwater would be available in drought years, thereby increasing the reliability of the City's water supply, starting in about 2015.

The City has included future appropriations of $200,000 per year for FY09-10 and FY10-11 in its CIP for acquisition of a permit from the RWQCB for a pilot test, performance of a pilot test, and preparation of an environmental impact report (CIP 7578). Operation and maintenance costs are estimated to be $210,000 per year.[17]

Additional (Future) Non-Potable Water Supplies

The estimated non-potable water demand for the Proposed Project is 482 af/yr. The initial non-potable water supply for the Proposed Project for landscape irrigation purposes is recommended to be untreated surface water diverted from Sugar Cut, which has historically and is currently used for irrigation purposes on the project site. In the future, non-potable water supplies for landscape irrigation (e.g., tertiary-treated recycled water) will be available from the City's main wastewater treatment plant and/or satellite treatment plants located in other parts of the City. This tertiary-treated recycled water will be available for non-potable water uses at the Proposed Project and other planned projects in the City (e.g., Tracy Gateway and Tracy Hills).

Shallow non-potable groundwater may also be available beneath the project site and could be extracted through the construction of new on-site wells. However, as described below, due to water quality concerns, shallow groundwater is not recommended to meet the Proposed Project's non-potable demands.

Each of these additional (future) non-potable water supplies is discussed below.

<u>Diversion of Non-Potable Surface Water from Sugar Cut</u>

As described above, the Proposed Project site has historically (since at least 1912) been irrigated using untreated surface water diverted from Sugar Cut. Over the years, the project site has been farmed and planted with a variety of crops, including winter wheat, corn, tomatoes, alfalfa and, when the property was owned by Holly Sugar, sugar beets. The project site is currently being farmed and irrigated with untreated surface water diverted from Sugar Cut. The actual quantity of this non-potable water use is not available, but is estimated to be at least 4 to 6 af/ac/yr based on the types of crops currently planted on the property (primarily alfalfa) and the irrigation method (flood irrigation). This equates to about 1,200 to 1,800 af/yr of non-potable water currently being used to irrigate the 298-acre project area.

Although there appears to be no appropriative documentation, the rights to the untreated surface water from Sugar Cut are considered to be pre-1914 appropriative rights, and may also be classified as riparian rights. Use of the water from Sugar Cut has been continuous on the project site for irrigation purposes since at least 1912. The continued use of this water supply from

[17] Source: City of Tracy Capital Improvement Program for FY08-09 through FY12-13.

Sugar Cut for the Proposed Project is considered a continued beneficial use of the supply for essentially the same purpose of irrigation.

The use of non-potable surface water from Sugar Cut for the Proposed Project is estimated to be up to 482 af/yr (based on buildout of the Proposed Project). This equates to less than half of the current water use on the project site. The use of untreated surface water from Sugar Cut for non-potable water uses for the Proposed Project would be for the interim only (only until recycled water supplies become available), and is consistent with the historical and current water use on the project site.

Shallow Non-Potable Groundwater

As discussed above, the groundwater sub-basin underlying the City has two aquifers: unconfined and confined. The uppermost unconfined aquifer is primarily comprised of the alluvium and flood basin formations. The underlying confined aquifer is primarily comprised of the Tulare Formation and it is overlain by the Corcoran Clay, which separates the upper unconfined aquifer from the underlying confined aquifer. The City's production wells draw from the confined aquifer only and the average annual operational groundwater yield of 9,000 af/yr described in previous sections applies only to the confined aquifer. The City does not currently pump any groundwater from the unconfined aquifer.

The hydraulic characteristics of the unconfined aquifer are highly variable, based on site specific conditions. Wells in the unconfined aquifer produce 6 to 5,300 gpm; however, pump test data are limited. The transmissivity of the unconfined aquifer, including the recent alluvium and upper portions of the Tulare Formation, ranges between 600 to greater than 2,300 gallons per day per foot (gpd/ft). The storativity is about 0.05. Where thicker sequences of sand are present, the transmissivity may be higher.

Relatively speaking, groundwater levels in the unconfined aquifer are significantly deeper at the south end of the City typically measuring about 48 feet below groundwater surface, whereas groundwater levels at the north end of the City are as shallow as 5 feet below ground surface. There appears to be a natural groundwater cycle where the water levels rise and then lower every few years, and are likely to fluctuate partly in response to tidal influences. Currently groundwater levels in the unconfined aquifer appear on the rise at the northern end of the City; however, there are insufficient data in the southern portion of the City to make any conclusions in this regard. Groundwater flow in the unconfined aquifer is generally from the southeast towards the Old River north of the City.

Groundwater recharge in the unconfined aquifer occurs from rainfall, applied water that percolates to the water table, and seasonal infiltration by the creeks. The recharge for the shallow unconfined aquifer is generally from the south, from the Coast Ranges, and moves to the north and west.

The unconfined aquifer is being monitored by other entities at four locations within the City. Static water levels are measured on a quarterly basis and reported to the RWQCB. The water quality monitored is typically just for the contaminants of concern and does not coincide with the general parameters monitored by the City and others in the confined aquifer.

DRAFT

Current pumping from the unconfined aquifer is thought to be widespread, via private wells, and used primarily for irrigation of agricultural areas. Current pumpage quantities are unknown; however, the stable groundwater level trends in the unconfined aquifer indicate that existing pumpage is within the operational yield of the unconfined aquifer.

Groundwater extracted from the unconfined aquifer is generally classified as being high in salts and not suitable for potable uses, but may be considered suitable for non-potable uses such as agricultural irrigation. Groundwater quality information is limited for the key constituents for the unconfined aquifer. Most of the available water quality data for the unconfined aquifer is from data from a 1968 basin-wide study. The following provides an overview of key water quality constituents in the unconfined aquifer:

- Total Dissolved Solids (TDS) varies greatly (ranging from 567 mg/L to 2,310 mg/L), but overall is poorer quality than the confined aquifer and exceeds recommended drinking water Maximum Contaminant Levels (MCLs)[18]. The TDS concentrations increase toward the rivers and to the west.
- Sulfate concentrations in the unconfined aquifer ranged from less than 100 to over 600 mg/L[19].
- Chloride concentrations in the unconfined aquifer range from 50 to 850 mg/L, with the lowest concentrations near the Coast Ranges south of Tracy near the airport[20].
- Boron concentrations in the unconfined aquifer range from 0.7 to 6.3 mg/L[21]. The lowest concentrations follow a similar pattern as the TDS, with low concentrations near the Coastal Range foothills.

The shallow groundwater is considered to be suitable for agricultural irrigation purposes. However, given the relatively poor permeability of the soils in the Proposed Project area, there is concern for the potential accumulation of salts in the soil, leading to soil binding. This could partially be mitigated by planting salt-tolerant turf and plant materials and providing good subsurface drainage; however, this may not be a feasible solution for the Proposed Project.

Therefore, due to the poor water quality associated with the shallow groundwater supply, the use of this supply to meet the non-potable demands for the Proposed Project is not recommended, and is not discussed further in this WSA.

---

[18] The recommended MCL for TDS is 500 mg/L, with an upper limit of 1,000 mg/L if it is not reasonable or feasible to supply water with lower concentrations. Short-term use is allowed for water between 1,000 and 1,500 mg/L.

[19] The recommended MCL for sulfate is 250 mg/L, with an upper limit of 500 mg/L if it is not reasonable or feasible to supply water with lower concentrations. Short-term use is allowed for water up to 600 mg/L.

[20] The recommended MCL for chloride is 250 mg/L, with an upper limit of 500 mg/L if it is not reasonable or feasible to supply water with lower concentrations. Short-term use is allowed for water up to 600 mg/L.

[21] There is no established MCL for boron. However, California DPH has established an Action Level of 1 mg/L for boron.

Recycled Water

In 2002, the City adopted a Recycled and Non-Potable Water Ordinance requiring all new subdivisions, to the extent practicable, to install the required infrastructure (such as dual-distribution pipelines) to provide recycled water to meet non-potable water demands at parks, golf courses, athletic fields, schools, median island landscapes, and industrial sites. A copy of the Tracy City Code Chapter 11.30 Recycled and Non-Potable Water is provided in Appendix D.

Currently, recycled water is being considered as a water supply on a project-by-project basis, primarily as a potable water offset. This is the case with the proposed Tracy Gateway and Tracy Hills Projects wherein wastewater treatment scalping plants are proposed to treat wastewater from each project area to a tertiary level for use for landscape irrigation within and adjacent to the project areas. The projected recycled water demand for the Tracy Gateway Project is 763 af/yr for on-site landscape irrigation uses and up to 780 af/yr for off-site landscape irrigation uses at City parks and other large landscaped areas, as part of the Water Exchange Program[22]. The projected recycled water demand for the Tracy Hills Project is 3,300 af/yr[23].

The City recently expanded its main wastewater treatment plant (WWTP), including improvements to the City's existing treatment facilities, construction of additional facilities at the existing WWTP site, as well as construction of a second outfall pipe and diffuser in Old River. These improvements increased the treatment capacity from 9 mgd to 16 mgd (average daily flow) (equivalent to almost 18,000 af//yr), and provided tertiary-level treatment complying with Title 22 requirements.

In 2025, the wastewater flow to the City's main wastewater treatment plant is projected to be 14.5 mgd, or about 16,250 af/yr[24]. At this time, it is unclear how much of this total wastewater flow will be treated to a tertiary level. However, it appears likely that adequate tertiary-treated wastewater (recycled water) will be available, as the estimated non-potable demand for the Proposed Project and other planned projects in the City (e.g., Tracy Gateway and Tracy Hills) of 5,326 af/yr[25] equates to only about 33 percent of the total projected wastewater flow in 2025.

The future use of recycled water for irrigation of the Proposed Project will require careful planning and protocols to minimize ponding and runoff of recycled water, as well as public information and notifications as to the use of recycled water. Approvals and permits for the production, distribution and use of recycled water will be required from the RWQCB and the California Department of Public Health (DPH).

---

[22] City of Tracy 2005 UWMP, Table 25.

[23] City of Tracy 2005 UWMP, Table 25.

[24] City of Tracy 2005 UWMP.

[25] Proposed Project 482 af/yr + Tracy Gateway 763 af/yr + Water Exchange Program 780 af/yr + Tracy Hills 3,301 af/yr = 5,326 af/yr

Summary of Existing and Additional Potable and Non-Potable Water Supplies

Table 14 provides a summary of the City's existing and additional water supply entitlements. Table 15 provides a summary of historical water supply deliveries and anticipated additional water supplies during normal years from each of the City's water supplies. A discussion of the future anticipated availability of these existing and additional water supplies during dry years is provided in the next section.

Table 14. Summary of City of Tracy Existing and Additional Water Supplies

Supply	Water Right or Available Supply Quantity, af/yr	Supply Ever Used by City
Existing Potable Water Supplies		
USBR CVP Contract (City Contract) (M&I Reliability)	10,000	Yes
USBR CVP (BCID assignment) (Ag Reliability)	5,000	Yes
USBR CVP (WSID assignment) (Ag Reliability)	2,500	Yes
South County Water Supply Project (pre-1914 rights)	10,000	Yes
Groundwater [a]	9,000	Yes
Semitropic Water Storage Bank (Pilot Agreement)[b,c]	333	Yes
Additional Potable Water Supplies		
Semitropic Water Storage Bank (Permanent Agreement)[c]	3,500	No
USBR CVP (WSID Option) (Ag Reliability)[d]	2,500	No
USBR CVP (BBID contract) (Ag Reliability)	11,000	No
BBID (pre-1914)	3,000	No
Aquifer Storage and Recovery[c]	3,000	No
Additional Non-Potable Water Supplies		
Diversions of Non-Potable Surface Water from Sugar Cut (interim)	Up to 1,800 [f]	Yes [g]
Recycled Water (future)	Up to 16,250[e]	No

[a] The City is planning to decrease groundwater use to 2,500 af/yr by the year 2015. However, studies described in this WSA have indicated that up to 9,000 af/yr of groundwater is available to the City to make up for shortfalls in the event of a severe drought or other water shortage.
[b] Semitropic pilot agreement will be ended once future permanent agreement is implemented.
[c] Supplies from Semitropic and ASR are assumed to be dry year supplies. As such, during normal years, supplies from these sources are assumed to be 0 af/yr.
[d] This option will be exercised by the City in conjunction with the Downtown Specific Plan Project to supplement existing supplies and ensure that there are adequate supplies to meet the demands of existing users and planned future uses under all hydrologic conditions.
[e] The total projected wastewater flow in 2025 is 16,250 af/yr. The amount of this total wastewater flow which will be treated to a tertiary level will depend on the future recycled water demand within specific projects within the City's service area.
[f] The diversion right from Sugar Cut has not been explicitly quantified; however, water use on the property has been continuous and beneficial since at least 1912. Current diversions from Sugar Cut for use on the project site are estimated to be 1,200 to 1,800 af/yr.
[g] Current diversions from Sugar Cut for use on the project site for irrigation purposes are by the lessee of the property.

DRAFT

DRAFT

Table 15. Quantity of Historical Water Deliveries and Existing and Additional Potable and Non-Potable Water Supplies in Normal Years

Supply	Historical Water Deliveries, af/yr							Projected Future Available Supplies, af/yr				
	1975	1980	1985	1990	1995	2000	2005	2010	2015	2020	2025	2030
Existing Potable Water Supplies[a,b]												
USBR CVP Contract (City Contract)	0	5,676	5,734	4,968	8,387	7,785	8,941	8,500	8,500	8,500	8,500	8,500
USBR CVP (BCID assignment)	0	0	0	0	0	0	0	2,900	2,900	2,900	2,900	2,900
USBR CVP (WSID assignment)	0	0	0	0	0	0	0	1,450	1,450	1,50	1,450	1,450
Total CVP Deliveries	0	5,676	5,734	4,968	8,387	7,785	8,941	12,850	12,850	12,850	12,850	12,850
South County Water Supply Project (pre-1914 rights)	0	0	0	0	0	0	3,146	10,000	10,000	10,000	10,000	10,000
Groundwater[c]	5,850	1,980	2,856	5,838	4,310	6,548	5,826	4,000	2,500	2,500	2,500	2,500
Semitropic Water Storage Bank (Pilot Agreement)[d]								0	0	0	0	0
Total Existing Potable Supplies	5,850	7,656	8,590	10,806	12,697	14,333	17,913	26,850	25,350	25,350	25,350	25,350
Additional Potable Water Supplies[b]												
Semitropic Water Storage Bank (Permanent Agreement)[d]								0	0	0	0	0
USBR CVP (WSID Option)[e]								1,450	1,450	1,450	1,450	1,450
USBR CVP (BBID contract)								1,740	3,480	5,220	6,380	6,380
BBID (pre-1914)								0	1,000	2,000	3,000	3,000
Aquifer Storage and Recovery[f]								0	0	0	0	0
Total Additional Potable Supplies								1,740	5,930	8,670	10,830	10,830
Total Potable Supplies	**5,850**	**7,656**	**8,590**	**10,806**	**12,697**	**14,333**	**17,913**	**30,040**	**31,280**	**34,020**	**36,180**	**36,180**
Additional Non-Potable Water Supplies												
Diversions of Non-Potable Water from Sugar Cut (interim)								Up to 1,800 af/yr				
Recycled Water (future)								Up to 16,250 af/yr by 2025				
Total Non-Potable Water Supplies								**See above**				

(a) Historical supply data based on production data received from Dan Wengrin, September 20, 2006.
(b) Projected additional supplies based on Table 11 Current and Projected Water Supply Allocations – Normal Year, City of Tracy Urban Water Management Plan, December 2005.
(c) Although the City can sustainably extract up to 9,000 af/yr of groundwater, the City is planning to scale back its groundwater extraction in future years to increase the overall quality of its water supply. The City will continue to rely on groundwater for peaking and drought and emergency supplies, up to 9,000 af/yr, on an as-needed basis.
(d) In normal years, supply from the Semitropic Water Storage Bank is assumed to be 0 af/yr, as this is considered a dry year supply. Up to 3,500 af/yr is assumed to be available in dry years starting in 2010 (up to 333 af/yr is available now under the Pilot Agreement).
(e) This option will be exercised by the City in conjunction with the Proposed Project to supplement existing supplies and ensure that there are adequate supplies to meet the demands of existing users, planned future uses and the Proposed Project under all hydrologic conditions.
(f) In normal years, supply from the ASR Project is assumed to be 0 af/yr, as this is considered a dry year supply. Up to 3,000 af/yr is assumed to be available in dry years starting in 2015.

Water Supply Reliability

Potable Water Supply Reliability

Water Code section 10910 (c)(4) requires that a WSA include a discussion with regard to "whether total projected water supplies, determined to be available by the city or county for the project during normal, single dry, and multiple dry water years during a 20-year projection, will meet the projected water demand associated with the proposed project, in additional to existing and planned future uses, including agricultural and manufacturing uses." Accordingly, this WSA addresses these three hydrologic conditions through the year 2030. In addition, the City's 2005 UWMP evaluated an extreme dry year condition to estimate a worst-case water supply scenario. Although the requirements of SB 610 do not require the analysis of an extreme dry year condition, to be consistent with the City's 2005 UWMP, this WSA also addresses the extreme dry year hydrologic condition through the year 2030.

The reliability of each DMC/CVP water supply was estimated based on hydrologic modeling work conducted by the USBR. The USBR modeling projects annual delivery quantities from the CVP taking into consideration historical hydrologic conditions, current environmental restrictions and regulatory constraints, and Delta improvements over a 71-year period (1922-1993). Based on this modeling, during an average hydrologic year, the City can expect to receive approximately 85 percent of its M&I-reliability water supply and 58 percent of its Ag-reliability water from the USBR's allotment of CVP water via the DMC (plus the small volume of BBID water that is managed through the City's treatment and distribution system on behalf of Patterson Pass Business Park). It should be noted that normal year CVP supplies might be subject to a reduction of approximately 10 percent due to issues related to recent environmental concerns in the Delta; however, even if the supply were to be reduced by 10 percent, the City will still have more than sufficient supplies to meet normal year demands.

During droughts, the cutbacks to the City's DMC/CVP supply are projected to be even greater. When CVP/DMC supplies are thus reduced, the City can increase its use of SCWSP water and local groundwater. The availability of these sources is considered to be less dependent on climatic factors and is likely to be available at more consistent levels. In addition, the City will further increase the reliability of its water supply during drought years through the purchase of groundwater banking capacity in the Semitropic Water Storage Bank and potential future implementation of an ASR program.

During a single dry year, or when the DMC/CVP flows must be reduced due to environmental impacts, all of the City's existing surface water allotments are subject to some level of reduction. The actual reductions will vary with the severity of the regional water supply shortage and climatic conditions, and the consideration of water and contract rights. In the City's 2005 UWMP, it was assumed that the City would receive the following water supplies during a single dry year:

- 90 percent of pre-1914 water rights water,
- 75 percent of M&I reliability USBR allotment of DMC/CVP water, and
- 25 percent of Ag reliability USBR allotment of DMC/CVP water.

If there are multiple dry years, the City's surface water allotments, especially from the DMC/CVP, may be significantly reduced. Thus, in the event of drought, the City will have to depend more heavily on conservation efforts and its groundwater and SCWSP supplies. As an example, in 1991, due to prolonged drought, the USBR reduced the City's DMC/CVP surface water allotment by 50 percent, such that the City's 1991 allocation was reduced to 5,000 af. As a result, the City implemented a water conservation program consistent with its Water Shortage Contingency Plan (included in the City's UWMP) and relied on its groundwater supply to satisfy a larger portion of the water demand. The City now has a broader portfolio of water supplies. In the City's 2005 UWMP, it was assumed that the City would receive the following water supplies during a multiple dry year period:

- 90 percent of pre-1914 water rights water,
- 50 percent of M&I reliability USBR allotment of DMC/CVP water, and
- 25 percent of Ag reliability USBR allotment of DMC/CVP water.

In the City's 2005 UWMP it was assumed that during an extreme dry year, the City's Ag reliability water could be cut to as little as 13 percent of its contractual amount. However, due to continuing drought conditions in California, as of April 2009, the anticipated allocation for Ag reliability customers south of the Delta is 10 percent. This was increased from a 0 percent allocation predicted earlier in the year. To be conservative, a 0 percent allocation has been reflected in the analysis contained in this WSA for the extreme dry year condition. The following are the assumed water supplies during an extreme dry year:

- 90 percent of pre-1914 water rights water,
- 50 percent of M&I reliability USBR allotment of DMC/CVP water, and
- 0 percent of Ag reliability USBR allotment of DMC/CVP water.

<u>Non-Potable Water Supply Reliability</u>

Based on the apparent water rights associated with the surface water from Sugar Cut, reliability of these supplies is considered to be quite high. As discussed above for the pre-1914 appropriative rights associated with the supply from BBID, reliability of the surface water from Sugar Cut is assumed to 100 percent during normal years, and 90 percent during all other hydrologic conditions. To meet peak demands at the Proposed Project, a balancing reservoir may be required to ensure that adequate supplies are available at all times.

Recycled water supplies are generally regarded as being highly reliable water supplies, even during drought conditions. This is because wastewater flows are primarily generated from interior water uses which remain about the same throughout the year and during drought conditions (reductions in water use during drought conditions are primarily the result of reduced exterior water uses which generally do not become wastewater flows). For this reason, it is assumed that recycled water supplies will be 100 percent reliable under all hydrologic conditions.

DRAFT

The reliability of each of the City's existing and additional potable and non-potable water supplies and their projected availability during normal, single dry, multiple dry and extreme dry years, is described further below and summarized in Table 16.

Table 16. Water Supply Reliability in Normal, Single Dry, Multiple Dry and Extreme Dry Years

Supply	Anticipated Reliability (% of Entitlement)			
	Normal Years	Single Dry Years	Multiple Dry Years	Extreme Dry Years
Existing Potable Water Supplies				
USBR CVP Contract (City Contract) (M&I Reliability)	85%[a]	75%	50%	50%
USBR CVP (BCID assignment) (Ag Reliability)	58%[a]	25%	25%	0%[e]
USBR CVP (WSID assignment) (Ag Reliability)	58%[a]	25%	25%	0%[e]
South County Water Supply Project (pre-1914 rights)	100%	90%	90%	90%
Groundwater[b]	100%	100%	100%	100%
Semitropic Water Storage Bank (Pilot Agreement)[c]	--	100%	100%	100%
Additional Potable Water Supplies				
Semitropic Water Storage Bank (Permanent Agreement)[c]	--	100%	100%	100%
USBR CVP (WSID Option) (Ag Reliability)[d]	58%	25%	25%	0%[e]
USBR CVP (BBID contract) (Ag Reliability)	58%	25%	25%	0%[e]
BBID (pre-1914 rights)	100%	90%	90%	90%
Aquifer Storage and Recovery[c]	--	100%	100%	100%
Additional Non-Potable Water Supplies				
Diversions of Non-Potable Water from Sugar Cut	100%	90%	90%	90%
Recycled Water	100%	100%	100%	100%

(a) Normal year CVP supplies might be subject to a reduction of approximately 10 percent due to issues related to recent environmental concerns in the Delta; however, even if the supply were to be reduced by 10 percent, the City will still have more than sufficient supplies to meet normal year demands.

(b) The City is planning to decrease groundwater use to 2,500 af/yr by the year 2015. However, studies described in this WSA have indicated that up to 9,000 af/yr of groundwater is available to the City to make up for shortfalls in the event of a severe drought or other water shortage.

(c) Supplies from Semitropic and ASR are assumed to be dry year supplies. As such, during normal years, supplies from these sources are assumed to be 0 af/yr. Once the Permanent Agreement is reached, the Pilot Agreement will be terminated.

(d) This option will be exercised by the City in conjunction with the Proposed Project to supplement existing supplies and ensure that there are adequate supplies to meet the demands of existing users, planned future uses and the Proposed Project under all hydrologic conditions.

(e) The anticipated reliability of CVP Ag Reliability supplies has been reduced from the 13 percent presented in the City's UWMP to 0 percent to be conservative, based on California water supply conditions as a result of pumping restrictions in the Delta and the on-going drought.

DRAFT

Normal Years

Normal or wet water years are those water years that match or exceed median rainfall and runoff levels. The following describes the availability and reliability of the City's existing and additional water supplies under normal year conditions:

- The City Contract for an annual entitlement of 10,000 af of USBR water from the DMC/CVP is subject to M&I Reliability. Based on the historical record, the City's long-term average allocation of DMC/CVP water pursuant to this contract is anticipated to be at least 75 percent of the total entitlement, or 7,500 af/yr. The City's allocations over the last five years have averaged 89 percent of its 10,000 af/yr entitlement. In 2006, the City was allocated 100 percent of its entitlement. In both 2007 and 2008, due to dry hydrologic conditions, the City was allocated 75 percent of its entitlement. For projection purposes, it has been assumed that the City will receive 85 percent of its entitlement during normal water years, or 8,500 af/yr.
- The City has been assigned contracts (BCID and WSID) for an annual entitlement of up to 7,500 af/yr of USBR water from the DMC/CVP. The City also holds an option to purchase an additional 2,500 acre-feet per year of DMC/CVP contract entitlement from WSID (as noted above the City will exercise this option in conjunction with the Proposed Project to supplement existing water supplies and ensure adequate supplies under all hydrologic conditions). These contracts are subject to Ag-reliability. For the last five years, average deliveries of DMC/CVP water pursuant to Ag-reliability have been 69 percent of the total entitlement. In 2006, the City was allocated 100 percent of its entitlement. In 2007 and 2008, due to dry hydrologic conditions, the City was allocated 50 and 40 percent of its entitlement, respectively[26] The City is conservatively estimating that it will receive 58 percent of its Ag-reliability contractual entitlement in future normal water years, or a total of 4,350 af (0.58 x 7,500 af) per year based on current assignments and 5,800 af (0.58 x 10,000 af) per year once the remaining 2,500 af/yr entitlement is purchased from WSID.
- During a normal water year, the City expects to receive 100 percent of its SCWSP water supply allocation, or 10,000 af/yr.
- Pursuant to the Groundwater Management Policy, the City can extract up to 9,000 af/yr of local groundwater. Because of the high TDS and hardness of the City's groundwater, the City hopes to reduce its dependency on groundwater in the future. As additional higher quality water supplies come on line, the City estimates that it may be possible to reduce the quantity of groundwater used during a typical normal or wet year. This reduction however, is highly dependent on future water supplies and demands and should be viewed as a goal, and not a firm projection. In the event that additional supplies are needed, the City may utilize up 9,000 af of groundwater per year.

[26] City of Tracy Water Inventory Reports dated August 1, 2006 and February 5, 2008.

DRAFT

- In the future, up to 3,000 af/yr of pre-1914 appropriative water rights water is expected to be available directly or via exchange from BBID. This supply is expected to increase incrementally as development in the Tracy Hills area occurs, with 1,000 af/yr by 2015, 2,000 af/yr by 2020, and 3,000 af/yr by 2025. The City anticipates being able to receive 100 percent of this supply during normal and wet years.
- In the future, up to approximately 11,000 af/yr of Ag-reliability water from BBID DMC/CVP contract is expected to be available to the City. Therefore, in future normal water years, as much as 6,380 af/yr (0.58 x 11,000 af) will be available.
- By 2015, 3,000 af/yr of banked water is assumed to be available through the City's ASR program and, by 2010, approximately 3,500 af/yr (for three consecutive years) of banked water through the Semitropic Water Storage Bank (up to 333 af/yr is available now under the Pilot Agreement). However, these supplies are considered dry year supplies, and are assumed to be zero in normal years.
- Non-potable supplies (including untreated surface water from Sugar Cut and future recycled water) are anticipated to be 100 percent reliable under normal year conditions.

The reliability of each of the City's existing and additional water supplies and their projected availability during normal and wet years is shown in Table 17. Figure 9 shows the City's projected future potable water supply versus potable water demand in normal years.

DRAFT

Table 17. Projected Existing and Additional Water Supplies Available in Normal Years

Supply	Anticipated Reliability (% of Entitlement)	Projected Future Available Supply, af/yr					
	Normal Years	2005	2010	2015	2020	2025	2030
Existing Potable Water Supplies							
USBR CVP Contract (City Contract)	85%[a]	8,500	8,500	8,500	8,500	8,500	8,500
USBR CVP (BCID assignment)	58%[a]	2,900	2,900	2,900	2,900	2,900	2,900
USBR CVP (WSID assignment)	58%[a]	1,450	1,450	1,450	1,450	1,450	1,450
Total CVP Deliveries		12,850	12,850	12,850	12,850	12,850	12,850
South County Water Supply Project (pre-1914 rights)	100%	10,000	10,000	10,000	10,000	10,000	10,000
Groundwater[b]	100%	6,000	4,000	2,500	2,500	2,500	2,500
Semitropic Water Storage Bank (Pilot Agreement)[c]	--	0	0	0	0	0	0
Additional Potable Water Supplies							
Semitropic Water Storage Bank (Permanent Agreement)[c]	--	0	0	0	0	0	0
USBR CVP (WSID Option)[d]	58%	0	1,450	1,450	1,450	1,450	1,450
USBR CVP (BBID contract)	58%	0	1,740	3,480	5,220	6,380	6,380
BBID (pre-1914 rights)	100%	0	0	1,000	2,000	3,000	3,000
Aquifer Storage and Recovery[c]	--	0	0	0	0	0	0
Total Projected Potable Water Supply		28,850	30,040	31,280	34,020	36,180	36,180
% Cutback from Normal Year		0%	0%	0%	0%	0%	0%
Additional Non-Potable Water Supplies							
Diversions of Non-Potable Water from Sugar Cut	100%	Up to 1,800 af/yr based on current use at project site					
Recycled Water	100%	Up to 16,250 af/yr by 2025					

(a) Normal year CVP supplies might be subject to a reduction of approximately 10 percent due to issues related to recent environmental concerns in the Delta; however, even if the supply were to be reduced by 10 percent, the City will still have more than sufficient supplies to meet normal year demands.

(b) The City is planning to decrease groundwater use to 2,500 af/yr by the year 2015. However, studies described in this WSA have indicated that up to 9,000 af/yr of groundwater is available to the City to make up for shortfalls in the event of a severe drought or other water shortage.

(c) Assumed to be zero in normal years, as Semitropic and ASR are considered to be dry year supplies.

(d) This option will be exercised by the City in conjunction with the Proposed Project to supplement existing supplies and ensure that there are adequate supplies to meet the demands of existing users, planned future uses and the Proposed Project under all hydrologic conditions.

DRAFT

Single Dry Years

A single dry year is generally considered to be the lowest annual runoff for a watershed recorded since the 1903-04 water year. For the purposes of this WSA, the DWR/USBR PROSIM model was used to predict water supply availability for DMC/CVP water under such conditions. The following describes the availability and reliability of the City's existing and additional water supplies under single dry year conditions:

- The City Contract for an annual entitlement of 10,000 ac-ft of USBR water from the DMC/CVP is subject to M&I Reliability. Based on the historical record, it is assumed that during a single-dry year, the City's annual allocation will be 75 percent of its entitlement, or 7,500 af/yr.
- The City currently holds the assignment contracts (BCID and WSID) for an annual entitlement of up to 7,500 af/yr, and plans to purchase an additional 2,500 af/yr of entitlement from WSID, for a total of 10,000 af/yr of entitlements. These contracts pertain to USBR water from the DMC/CVP and are subject to Ag-reliability. Based on the historical record and PROSIM modeling, it is assumed that during a single-dry year, the City's allocation will be 25 percent of its entitlement, 1,875 af/yr (based on the existing 7,500 af/yr of entitlements) and 2,500 af/yr (based on the future 10,000 af/yr of entitlements).
- During a single-dry year, it is assumed that the City will receive 90 percent of its SCWSP water supply allocation, or 9,000 af/yr.
- Pursuant to the Groundwater Management Policy, the City can extract up to 9,000 af/yr of local groundwater resources. However, as described above, the City may reduce its future groundwater use to 2,500 af/yr by 2015 (based on normal year supply conditions). In the event that groundwater is needed to supplement surface water supplies during a single-dry year, however, the City does intend to call on these supplies up to the maximum sustainable yield of 9,000 af/yr.
- In the future, up to 3,000 af/yr of pre-1914 appropriative water rights water is expected to be available either directly or via exchange from BBID. This supply is expected to increase incrementally as development in the Tracy Hills area occurs, with 1,000 af/yr by 2015, 2,000 af/yr by 2020, and 3,000 af/yr by 2025. In single-dry water years after 2014, it is assumed that 90 percent of the contractual allocation will be available.
- In the future, up to 11,000 af/yr of Ag-reliability water from the BBID DMC/CVP contract is expected to be available to the City. In future single-dry water years, it is assumed that as much as 2,750 af/yr, or 25 percent of the contractual entitlement, of BBID water will be available.
- By 2015, 3,000 af/yr of banked water is assumed to be available through the City's ASR program and by 2010, approximately 3,500 af/yr (for three consecutive years) of banked water through the Semitropic Water Storage Bank (up to 333 af/yr is available now under the Pilot Agreement).

DRAFT

- Untreated surface water from Sugar Cut is assumed to be 90 percent reliable under single dry year conditions. Future recycled water is anticipated to be 100 percent reliable under single dry year conditions.

The reliability of each of the City's existing and additional water supplies and their projected availability during a single dry year is shown in Table 18. Figure 10 shows the City's projected future supply versus demand in single dry years.

Table 18. Projected Existing and Additional Water Supplies Available in Single Dry Years

Supply	Anticipated Reliability (% of Entitlement)	Projected Future Available Supply, af/yr					
	Single Dry Years	2005	2010	2015	2020	2025	2030
Existing Potable Water Supplies							
USBR CVP Contract (City Contract)	75%	7,500	7,500	7,500	7,500	7,500	7,500
USBR CVP (BCID assignment)	25%	1,250	1,250	1,250	1,250	1,250	1,250
USBR CVP (WSID assignment)	25%	625	625	625	625	625	625
Total CVP Deliveries		9,375	9,375	9,375	9,375	9,375	9,375
South County Water Supply Project (pre-1914 rights)	90%	9,000	9,000	9,000	9,000	9,000	9,000
Groundwater[(a)]	100%	9,000	9,000	9,000	9,000	9,000	9,000
Semitropic Water Storage Bank (Pilot Agreement)[(b)]	100%	0	0	0	0	0	0
Additional Potable Water Supplies							
Semitropic Water Storage Bank (Permanent Agreement)	100%	0	3,500	3,500	3,500	3,500	3,500
USBR CVP (WSID Option)[(c)]	25%	0	625	625	625	625	625
USBR CVP (BBID contract)	25%	0	750	1,500	2,250	2,750	2,750
BBID (pre-1914 rights)	90%	0	0	900	1,800	2,700	2,700
Aquifer Storage and Recovery	100%	0	0	3,000	3,000	3,000	3,000
Total Projected Potable Water Supply[(b)]		27,375	32,250	36,900	38,550	39,950	39,950
% Cutback from Normal Year		5%	0%	0%	0%	0%	0%
Additional Non-Potable Water Supplies							
Diversions of Non-Potable Water from Sugar Cut	90%	Up to 1,620 af/yr based on 90% of current use at project site (1,800 af/yr)					
Recycled Water	100%	Up to 16,250 af/yr by 2025					

(a) The City is planning to decrease groundwater use to 2,500 af/yr by the year 2015. However, studies described in this WSA have indicated that up to 9,000 af/yr of groundwater is available to the City to make up for shortfalls in the event of a severe drought or other water shortage.

(b) Total projected future supply does not include supply from Semitropic Pilot Agreement as this agreement will be terminated when the future Permanent Agreement is implemented.

(c) This option will be exercised by the City in conjunction with the Proposed Project to supplement existing supplies and ensure that there are adequate supplies to meet the demands of existing users, planned future uses and the Proposed Project under all hydrologic conditions.

DRAFT

Multiple Dry Years

A multiple dry year period is generally considered to be the lowest average runoff recorded over a consecutive multiple year period (three years or more) for a watershed since 1903. For example, 1928-1934 and 1987-1992 were the two multi-year periods of lowest average runoff during the 20th Century in the Central Valley Basin. The following describes the availability and reliability of the City's existing and additional water supplies under multiple dry year conditions:

- The City Contract for an annual entitlement of 10,000 af/yr of USBR water from the DMC/CVP is subject to M&I Reliability. Based on the historical record, it is assumed that during a multiple dry year period, the City's annual allocation will be 50 percent of its entitlement, or 5,000 af/yr.
- The City currently holds the assignment contracts (BCID and WSID) for an annual entitlement of up to 7,500 af/yr, and plans to purchase an additional 2,500 af/yr of entitlement from WSID, for a total of 10,000 af/yr of entitlements. These contracts pertain to USBR water from the DMC/CVP and are subject to Ag-reliability. Based on the historical record and PROSIM modeling, it is assumed that during multiple dry years, the City's allocation will be 25 percent of its entitlement, 1,875 af/yr (based on the existing 7,500 af/yr of entitlements) and 2,500 af/yr (based on the future 10,000 af/yr of entitlements).
- During a multiple dry year period, the City expects to receive 90 percent of its SCWSP water supply allocation, or 9,000 af/yr.
- Pursuant to the Groundwater Management Policy, the City can extract up to 9,000 af/yr of local groundwater resources. However, as described above, the City may reduce its future groundwater use to 2,500 af/yr by 2015 (based on normal year supply conditions). In the event that groundwater is needed to supplement surface water supplies during a multiple dry year period, however, the City does intend to call on these supplies up to the maximum sustainable yield of 9,000 af/yr.
- In the future, up to 3,000 af/yr of pre-1914 appropriative water rights water is expected to be available either directly or via exchange from BBID. This supply is expected to increase incrementally as development in the Tracy Hills area occurs, with 1,000 af/yr by 2015, 2,000 af/yr by 2020, and 3,000 af/yr by 2025. In multiple dry water years after 2014, it is assumed that 90 percent of the contractual allocation will be available.
- In the future, up to 11,000 af/yr of Ag-reliability water from BBID DMC/CVP contract is expected to be available to the City. In future multiple dry water years, it is assumed that as much as 2,750 af/yr of BBID water, or 25 percent of the contractual entitlement, will be available.
- In the future, up to 3,000 af/yr of banked water is assumed to be available through the City's ASR program and approximately 3,500 af/yr for three consecutive years of banked water is anticipated to be available through the Semitropic Water Storage Bank (up to 333 af/yr is available now under the Pilot Agreement).

DRAFT

- Untreated surface water from Sugar Cut is assumed to be 90 percent reliable under multiple dry year conditions. Future recycled water is anticipated to be 100 percent reliable under multiple dry year conditions.

The reliability of each of the City's existing and additional water supplies and their projected availability during a multiple dry year period is shown in Table 19. Figure 11 shows the City's projected future supply versus demand in multiple dry years.

Table 19. Projected Existing and Additional Water Supplies Available in Multiple Dry Years

Supply	Anticipated Reliability (% of Entitlement)	Projected Future Available Supply, af/yr					
	Multiple Dry Years	2005	2010	2015	2020	2025	2030
Existing Potable Water Supplies							
USBR CVP Contract (City Contract)	50%	5,000	5,000	5,000	5,000	5,000	5,000
USBR CVP (BCID assignment)	25%	1,250	1,250	1,250	1,250	1,250	1,250
USBR CVP (WSID assignment)	25%	625	625	625	625	625	625
Total CVP Deliveries		6,875	6,875	6,875	6,875	6,875	6,875
South County Water Supply Project (pre-1914 rights)	90%	9,000	9,000	9,000	9,000	9,000	9,000
Groundwater[(a)]	100%	9,000	9,000	9,000	9,000	9,000	9,000
Semitropic Water Storage Bank (Pilot Agreement)[(b)]	100%	0	0	0	0	0	0
Additional Potable Water Supplies							
Semitropic Water Storage Bank	100%	0	3,500	3,500	3,500	3,500	3,500
USBR CVP (WSID Option)[(c)]	25%	0	625	625	625	625	625
USBR CVP (BBID contract)	25%	0	750	1,500	2,250	2,750	2,750
BBID (pre-1914 rights)	90%	0	0	900	1,800	2,700	2,700
Aquifer Storage and Recovery	100%	0	0	3,000	3,000	3,000	3,000
Total Projected Potable Water Supply[(b)]		24,875	29,750	34,400	36,050	37,450	37,450
% Cutback from Normal Year		14%	1%	0%	0%	0%	0%
Additional Non-Potable Water Supplies							
Diversions of Non-Potable Water from Sugar Cut	90%	Up to 1,620 af/yr based on 90% of current use at project site (1,800 af/yr)					
Recycled Water	100%	Up to 16,250 af/yr by 2025					

(a) The City is planning to decrease groundwater use to 2,500 af/yr by the year 2015. However, studies described in this WSA have indicated that up to 9,000 af/yr of groundwater is available to the City to make up for shortfalls in the event of a severe drought or other water shortage.

(b) Total projected future supply does not include supply from Semitropic Pilot Agreement as this agreement will be terminated when the future Permanent Agreement is implemented.

(c) This option will be exercised by the City in conjunction with the Proposed Project to supplement existing supplies and ensure that there are adequate supplies to meet the demands of existing users, planned future uses and the Proposed Project under all hydrologic conditions.

DRAFT

Extreme Dry Years

As described in the City's UWMP, based on the historical record, and on PROSIM modeling, the City's Ag-reliability water could be cut to as little as 13 percent of its contractual allotment. However, due to California's on-going drought conditions, as of March 2009, the City's Ag-reliability water is currently at 0 percent. This current condition has been incorporated into this extreme dry year scenario. The following describes the availability and reliability of the City's existing and additional water supplies under extreme dry year conditions:

- The City Contract for an annual entitlement of 10,000 ac-ft of USBR water from the DMC/CVP is subject to M&I Reliability. Based on the historical record, it is assumed that during an extreme dry year, the City's annual allocation will be 50 percent of its entitlement, or 5,000 af.
- The City currently holds the assignment contracts (BCID and WSID) for an annual entitlement of up to 7,500 af/yr, and plans to purchase an additional 2,500 af/yr of entitlement from WSID, for a total of 10,000 af/yr of entitlements. These contracts pertain to USBR water from the DMC/CVP and are subject to Ag-reliability. Based on the current water supply conditions (as of April 2009), and to be conservative, it is assumed that during an extreme dry year, the City will receive 0 percent of its Ag-reliability entitlements.
- During an extreme dry year period, the City still expects to receive 90 percent of its SCWSP water supply allocation, or 9,000 af/yr.
- Pursuant to the Groundwater Management Policy, the City can extract up to 9,000 af/yr of local groundwater resources. However, as described above, the City may reduce its future groundwater use to 2,500 af/yr by 2015 (based on normal year supply conditions). In the event that groundwater is needed to supplement surface water supplies during an extreme dry year period, however, the City does intend to call on these supplies up to the maximum sustainable yield of 9,000 af/yr.
- In the future, up to 3,000 af/yr of pre-1914 appropriative water rights water is expected to be available either directly or via exchange from BBID. This supply is expected to increase incrementally as development in the Tracy Hills area occurs, with 1,000 af/yr by 2015, 2,000 af/yr by 2020, and 3,000 af/yr by 2025. In extreme dry water years after 2014, it is assumed that 90 percent of the contractual allocation will be available.
- In the future, up to 11,000 af/yr of Ag-reliability water from BBID DMC/CVP contract is expected to be available to the City. In future extreme dry water years, it is assumed that 0 percent of this Ag-reliability contractual entitlement will be available.
- In the future, up to 3,000 af/yr of banked water is assumed to be available through the City's ASR program and approximately 3,500 af/yr for three consecutive years of banked water through the Semitropic Water Storage Bank (up to 333 af/yr is available now under the Pilot Agreement).

DRAFT

- Untreated surface water from Sugar Cut is assumed to be 90 percent reliable under extreme dry year conditions. Future recycled water is anticipated to be 100 percent reliable under extreme dry year conditions.

The reliability of each of the City's existing and additional water supplies and their projected availability during an extreme-dry year is shown in Table 20. Figure 12 shows the City's projected future supply versus demand in extreme dry years.

Table 20. Projected Existing and Additional Water Supplies Available in Extreme Dry Years

Supply	Anticipated Reliability (% of Entitlement)	Projected Future Available Supply, af/yr					
	Extreme Dry Years	2005	2010	2015	2020	2025	2030
Existing Potable Water Supplies							
USBR CVP Contract (City Contract)	50%	5,000	5,000	5,000	5,000	5,000	5,000
USBR CVP (BCID assignment)	0%	0	0	0	0	0	0
USBR CVP (WSID assignment)	0%	0	0	0	0	0	0
Total CVP Deliveries		5,000	5,000	5,000	5,000	5,000	5,000
South County Water Supply Project (pre-1914 rights)	90%	9,000	9,000	9,000	9,000	9,000	9,000
Groundwater[(a)]	100%	9,000	9,000	9,000	9,000	9,000	9,000
Semitropic Water Storage Bank (Pilot Agreement)[(b)]	100%	0	0	0	0	0	0
Additional Potable Water Supplies							
Semitropic Water Storage Bank (Permanent Agreement)	100%	0	3,500	3,500	3,500	3,500	3,500
USBR CVP (WSID Option)[(c)]	0%	0	0	0	0	0	0
USBR CVP (BBID contract)	0%	0	0	0	0	0	0
BBID (pre-1914 rights)	90%	0	0	900	1,800	2,700	2,700
Aquifer Storage and Recovery	100%	0	0	3,000	3,000	3,000	3,000
Total Projected Potable Water Supply[(b)]		23,000	26,500	30,400	31,300	32,200	32,200
% Cutback from Normal Year		20%	12%	3%	8%	11%	11%
Additional Non-Potable Water Supplies							
Diversions of Non-Potable Water from Sugar Cut	90%	Up to 1,620 af/yr based on 90% of current use at project site (1,800 af/yr)					
Recycled Water	100%	Up to 16,250 af/yr by 2025					

(a) The City is planning to decrease groundwater use to 2,500 af/yr by the year 2015. However, studies described in this WSA have indicated that up to 9,000 af/yr of groundwater is available to the City to make up for shortfalls in the event of a severe drought or other water shortage.

(b) Total projected future supply does not include supply from Semitropic Pilot Agreement as this agreement will be ended when the future Permanent Agreement is implemented.

(c) This option will be exercised by the City in conjunction with the Proposed Project to supplement existing supplies and ensure that there are adequate supplies to meet the demands of existing users, planned future uses and the Proposed Project under all hydrologic conditions.

DRAFT

DETERMINATION OF WATER SUPPLY SUFFICIENCY

10910(c)(4) If the city or county is required to comply with this part pursuant to subdivision (b), the water supply assessment for the project shall include a discussion with regard to whether the total projected water supplies, determined to be available by the city or county for the project during normal, single dry, and multiple dry water years during a 20-year projection, will meet the projected water demand associated with the proposed project, in addition to existing and planned future uses, including agricultural and manufacturing uses.

10911 (a) If, as a result of its assessment, the public water system concludes that its water supplies are, or well be, insufficient, the public water system shall provide to the city or county its plans for acquiring additional water supplies, setting forth the measures that are being undertaken to acquire and develop those water supplies. If the city or county, if either is required to comply with this part pursuant to subdivision (b), concludes as a result of its assessment, that water supplies are, or will be, insufficient, the city or county shall include in its water supply assessment its plans for acquiring additional water supplies, setting forth the measures that are being undertaken to acquire and develop those water supplies. Those plans may include, but are not limited to, information concerning all of the following:

(1) The estimated total costs, and the proposed method of financing the costs, associated with acquiring the additional water supplies.

(2) All federal, state, and local permits, approvals, or entitlements that are anticipated to be required in order to acquire and develop the additional water supplies.

(3) Based on the consideration set forth in paragraphs (1) and (2), the estimated timeframes within which the public water system, or the city or county if either is required to comply with this part pursuant to subdivision (b), expects to able to acquire additional water supplies.

Findings

Based on the analysis described above, this Water Supply Assessment demonstrates that the City's existing and additional potable and non-potable water supplies are sufficient to meet the City's existing and projected future potable and non-potable water demands, including those future potable and non-potable water demands associated with the Proposed Project, to the year 2030 under all hydrologic conditions. The following discussion and associated tables demonstrate this sufficiency.

<u>Normal Years</u>

Table 21 summarizes the City's projected existing and additional potable and non-potable water supplies and demands in normal years to 2030 (see also Figure 9). The projected water demands shown include the projected water demands for the Proposed Project. **As shown, for normal years, the City's existing and additional water supplies are sufficient to meet the City's projected future water demands.** No water supply shortages are anticipated during normal years for the period.

DRAFT

Table 21. Projected Existing and Additional Water Supplies Available in Normal Years vs. Demand

Supply	Anticipated Reliability (% of Entitlement)	Projected Future Available Supply, af/yr					
	Normal Years	2005	2010	2015	2020	2025	2030
Existing Potable Water Supplies							
USBR CVP Contract (City Contract)	85% [a]	8,500	8,500	8,500	8,500	8,500	8,500
USBR CVP (BCID assignment)	58% [a]	2,900	2,900	2,900	2,900	2,900	2,900
USBR CVP (WSID assignment)	58% [a]	1,450	1,450	1,450	1,450	1,450	1,450
Total CVP Deliveries		12,850	12,850	12,850	12,850	12,850	12,850
South County Water Supply Project (pre-1914 rights)	100%	10,000	10,000	10,000	10,000	10,000	10,000
Groundwater[b]	100%	6,000	4,000	2,500	2,500	2,500	2,500
Semitropic Water Storage Bank (Pilot Agreement)[c,d]	--	0	0	0	0	0	0
Additional Potable Water Supplies							
Semitropic Water Storage Bank (Permanent Agreement)[c]	--	0	0	0	0	0	0
USBR CVP (WSID Option)[d]	58%	0	1,450	1,450	1,450	1,450	1,450
USBR CVP (BBID contract)	58%	0	1,740	3,480	5,220	6,380	6,380
BBID (pre-1914 rights)	100%	0	0	1,000	2,000	3,000	3,000
Aquifer Storage and Recovery[d]	--	0	0	0	0	0	0
Total Projected Potable Water Supply[e]		28,850	30,040	31,280	34,020	36,180	36,180
Total Projected Potable Water Demand[f]		18,500	19,900	22,700	25,900	28,200	30,500
Supply Shortfall		0	0	0	0	0	0
Additional Non-Potable Water Supplies							
Diversions of Non-Potable Water from Sugar Cut	100%	Up to 1,800 af/yr based on current use at project site					
Recycled Water	100%	Up to 16,250 af/yr by 2025					
Total Projected Non-Potable Water Supply		Up to 16,250 af/yr by 2025					
Total Projected Non-Potable Water Demand[g]		5,326 af/yr					
Supply Shortfall		0					

[a] Normal year CVP supplies might be subject to a reduction of approximately 10 percent due to issues related to recent environmental concerns in the Delta; however, even if the supply were to be reduced by 10 percent, the City will still have more than sufficient supplies to meet normal year demands.

[b] The City is planning to decrease groundwater use to 2,500 af/yr by the year 2015. However, studies described in this WSA have indicated that up to 9,000 af/yr of groundwater is available to the City to make up for shortfalls in the event of a severe drought or other water shortage.

[c] This is considered to be a dry year supply. Assumed to be zero during normal years.

[d] This option will be exercised by the City in conjunction with the Proposed Project to supplement existing supplies and ensure that there are adequate supplies to meet the demands of existing users, planned future uses and the Proposed Project under all hydrologic conditions.

[e] Total projected future supply does not include supply from Semitropic Pilot Agreement as this agreement will be ended when the Permanent Agreement is implemented.

[f] Projected potable water demand includes projected potable water demand for the Proposed Project.

[g] Includes projected non-potable water demand for Proposed Project, Tracy Gateway (on-site and for Water Exchange Program), and Tracy Hills.

DRAFT

Dry Years: 2007 Conditions

Table 22 summarizes the City's 2007 potable and non-potable water supplies and demands in normal, single dry, multiple dry and extreme dry years (see also Figure 13). **As shown, for all of the hydrologic conditions, the City's existing potable and non-potable water supplies, together with the City's execution of the remaining 2,500 af/yr WSID CVP assignment to be completed in conjunction with the Downtown Specific Plan Project, are sufficient to meet the City's 2007 water demands, in addition to those projected water demands associated with planned future uses and the Proposed Project, (even if none of the other additional water supplies become available in the future).** With the City's existing supplies and the additional 2,500 af/yr WSID assignment, no water supply shortages are anticipated for any of the hydrologic conditions based on 2007 water demands in addition to those projected water demands associated with planned future uses and the Proposed Project.

DRAFT

Table 22. Existing (2007) and Additional Dry Year Water Supply vs. Demand

Supply	Existing (2007) Dry Year Water Supply Availability, af/yr			
	Normal Years	Single Dry Year	Multiple Dry Years	Extreme Dry Year
Existing Potable Water Supplies				
USBR CVP Contract (City Contract)	8,500	7,500	5,000	5,000
USBR CVP (BCID assignment)	2,900	1,250	1,250	0
USBR CVP (WSID assignment)	1,450	625	625	0
Total CVP Deliveries	12,850	9,375	6,875	5,000
South County Water Supply Project (pre-1914 rights)	10,000	9,000	9,000	9,000
Groundwater	6,000	9,000[c]	9,000[c]	9,000[c]
Semitropic Water Storage Bank (Pilot Agreement)[d]	--	333	333	333
Additional Potable Water Supplies				
Semitropic Water Storage Bank (Permanent Agreement)	--	0	0	0
USBR CVP (WSID Option)[a]	1,450	625	625	0
USBR CVP (BBID contract)	0	0	0	0
BBID (pre-1914 rights)	0	0	0	0
Aquifer Storage and Recovery	--	0	0	0
Total Potable Water Supply	30,300	28,333	25,833	23,333
Existing Potable Water Demand (2007)[b]	19,176	19,176	19,176	17,258
Existing Potable Water Demand (2007) with Planned Future Uses and the Proposed Project[b]	25,832	25,832	25,832	23,249
Supply Shortfall	0	0	0	0
Additional Non-Potable Water Supplies				
Diversions of Non-Potable Water from Sugar Cut	1,200 to 1,800	1,080 to 1,620	1,080 to 1,620	1,080 to 1,620
Recycled Water	Not currently available			
Total Non-Potable Water Supply	1,200 to 1,800	1,080 to 1,620	1,080 to 1,620	1,080 to 1,620
Existing Non-Potable Water Demand (2007)	0	0	0	0
Existing Potable Water Demand (2007) with Proposed Project[e]	482	482	482	482
Supply Shortfall	0	0	0	0

(a) This option will be exercised by the City in conjunction with the Proposed Project to supplement existing supplies and ensure that there are adequate supplies to meet the demands of existing users, planned future uses and the Proposed Project under all hydrologic conditions.

(b) Water demand in an extreme dry year reduced by 10 percent due to additional mandatory water conservation measures.

(c) The City is planning to decrease groundwater use to 2,500 af/yr by the year 2015. However, studies described in this WSA have indicated that up to 9,000 af/yr of groundwater is available to the City to make up for shortfalls in the event of a severe drought or other water shortage. Therefore, groundwater pumpage during a dry year conditions assumed to be up to 9,000 af/yr per average annual operational yield of 9,000 af/yr.

(d) A Pilot Agreement with Semitropic was completed in 2006 for 1,000 af of storage (up to 333 af/yr withdrawal).

(e) Non-potable water demands for the Tracy Gateway Project and Tracy Hills Project will be met from satellite wastewater treatment facilities to be constructed in conjunction with those respective projects. Non-potable water demands for the Proposed Project (482 af/yr) will be met initially with non-potable shallow groundwater and diversions from Sugar Cut, and in the future with recycled water from the City's wastewater treatment plant.

DRAFT

Dry Years: 2030 Conditions

As described earlier in Tables 16 through 19, for all of the hydrologic conditions for future years through 2030, the City's existing and additional potable and non-potable water supplies are sufficient to meet the City's projected future water demands. Table 23 summarizes the City's Year 2030 water supplies and water demands in normal, single dry, multiple dry, and extreme dry years (see also Figure 14). The projected water demands shown include the projected water demands for the Proposed Project. **As shown, for all hydrologic conditions, the City's existing and additional potable and non-potable water supplies are sufficient to meet the City's Year 2030 water demands.** No water supply shortages are anticipated for any hydrologic conditions based on Year 2030 water demands.

DRAFT

Table 23. Existing and Additional Year 2030 Dry Year Water Supply vs. Demand

Supply	Year 2030 Dry Year Water Supply Availability, af/yr			
	Normal Years	Single Dry Years	Multiple Dry Years	Extreme Dry Years
Existing Potable Water Supplies				
USBR CVP Contract (City Contract)	8,500	7,500	5,000	5,000
USBR CVP (BCID assignment)	2,900	1,250	1,250	0
USBR CVP (WSID assignment)	1,450	625	625	0
Total CVP Deliveries	12,850	9,375	6,875	5,000
South County Water Supply Project (pre-1914 rights)	10,000	9,000	9,000	9,000
Groundwater[a]	2,500	9,000	9,000	9,000
Semitropic Water Storage Bank (Pilot Agreement)[b,c]	--	--	--	--
Additional Potable Water Supplies				
Semitropic Water Storage Bank (Permanent Agreement)[b]	--	3,500	3,500	3,500
USBR CVP (WSID Option) [d]	1,450	625	625	0
USBR CVP (BBID contract)	6,380	2,750	2,750	0
BBID (pre-1914 rights)	3,000	2,700	2,700	2,700
Aquifer Storage and Recovery[b]	--	3,000	3,000	3,000
Total Potable Water Supply[c]	36,180	39,950	37,450	32,200
Projected 2030 Potable Water Demand[e]	30,500	30,500	30,500	27,450
Supply Shortfall	0	0	0	0
Additional Non-Potable Water Supplies				
Diversions of Non-Potable Water from Sugar Cut	1,200 to 1,800	1,080 to 1,620	1,080 to 1,620	1,080 to 1,620
Recycled Water	Up to 16,250 af/yr			
Total Non-Potable Water Supply	Up to 16,250 af/yr			
Projected 2030 Non-Potable Water Demand[f]	5,326 af/yr			
Supply Shortfall	0			

[a] The City is planning to decrease groundwater use to 2,500 af/yr by the year 2015 (based on normal year supply conditions). However, studies described in this WSA have indicated that up to 9,000 af/yr of groundwater is available to the City to make up for shortfalls in the event of a severe drought or other water shortage.
[b] Supply from Semitropic Water Storage Bank and Aquifer Storage and Recovery (ASR) assumed to be zero during normal years.
[c] Total projected future supply does not include supply from Semitropic Pilot Agreement as this agreement will be ended when the Permanent Agreement is implemented.
[d] This option will be exercised by the City to supplement existing supplies and ensure that there are adequate supplies to meet the demands of existing users, planned future uses and the Proposed Project under all hydrologic conditions.
[e] Projected 2030 water demand includes projected water demand for the Proposed Project. Water demand in an extreme dry year reduced by 10 percent due to additional mandated water conservation measures.
[f] Includes projected non-potable water demand for Proposed Project, Tracy Gateway (on-site and for Water Exchange Program), and Tracy Hills.

DRAFT

The foregoing is based on an evaluation of both existing and additional (not yet subject to a firm assurance) water supplies. Based on the conclusion that sufficient water supply exists, the additional supplies analysis of Water Code 10911(a) is not required.

If instead, the determination of water supply sufficiency is limited to a consideration of existing water supplies only, such supplies would not be sufficient to meet the City's existing and projected future water demands, including those future water demands associated with the Proposed Project to the year 2030 under all hydrologic conditions. However, they will be sufficient if considered with additional water supplies identified by the City.

As described previously in this WSA, the City is currently anticipating the following additional water supplies:

- Out-of-basin water banking (Semitropic Water Storage Bank);
- Additional surface water from the Delta-Mendota Canal (WSID and BBID supplies from the Central Valley Project);
- Surface water from BBID pre-1914 water rights;
- Aquifer Storage and Recovery;
- Untreated surface water from Sugar Cut, and
- Recycled water.

Each of these additional water supplies is described below.

Out-of-Basin Water Banking (Permanent Agreement)

As noted previously, the City anticipates entering into a long-term agreement with Semitropic for 3,500 af/yr of water storage. A permanent agreement with Semitropic will require an agreement with Semitropic, confirmation that the USBR has no objection thereto, and preparation of required environmental documentation in accordance with CEQA and NEPA. An amount of $4.5 million has been included in the City's Capital Improvement Program (CIP) future appropriations for FY09-10 to complete the permanent agreement (CIP 7593). The City anticipates that this permanent agreement with Semitropic will be in place by 2010. Once the permanent agreement is in place, the City anticipates an annual maintenance cost of $26,300.[27]

Additional Central Valley Project Water via the Delta-Mendota Canal

The City has an option for an additional assignment of 2,500 af/yr of Ag-reliability CVP contract entitlement water from the WSID. Per the agreement with WSID, the City can execute this option at any time before midnight on February 27, 2014. Environmental review and all other required reviews and approvals for this assignment have been completed. A copy of the City's agreement for assignment with WSID is included in Appendix A. An amount of $2.125

[27] Source: City of Tracy Capital Improvement Program for FY08-09 through FY12-13.

DRAFT

million has been included in the City's CIP future appropriations for FY11-12 (CIP 7561) for this water supply assignment from WSID.[28]

Due to on-going urbanization in portions of BBID's service area, BBID anticipates that it may have CVP contract entitlement available for municipal uses in the future. The City and BBID are negotiating a phased option agreement to assign portions of BBID's CVP/DMC contract right to the City. The estimated quantity of contract entitlement water potentially subject to such an agreement is approximately 11,000 af/yr. The exact quantity of BBID CVP water entitlement is the subject of the future agreement and the exact quantity has not yet been determined. It is estimated that an agreement between the City and BBID can be made in the next year or so to allow for additional CVP supplies to be available to the City by 2010. Because the exact quantity of water available and terms of a future agreement are yet to be negotiated, the cost and financing methods for acquiring this supply have not yet been determined.

Surface Water from BBID Pre-1914 Water Rights

The City anticipates that up to 3,000 af/yr of pre-1914 water rights water will be provided by BBID directly (using a pipeline delivery system) or via exchange to serve development in the BBID service area (i.e., the Tracy Hills Project, as demand ramps up over time). This supply is expected to increase incrementally as development in the Tracy Hills area occurs, with 1,000 af/yr by 2015, 2,000 af/yr by 2020, and 3,000 af/yr by 2025. Future work to secure this water source includes: finalizing agreements between the City and BBID; completion of environmental documentation; and, if BBID water is to be used directly, construction of a BBID new intake facility, construction of an 11-mile transmission pipeline from BBID and/or execution of a wheeling agreement with the owner of existing conveyance facilities (such a wheeling agreement may require approvals from DWR and/or USBR depending upon how the water is to be wheeled) to convey the water supply to the City's recently expanded JJWTP for treatment. The conveyance mechanism will need to meet the City's reliability criteria. Conveyance may also be accomplished via an exchange with another water user.

Costs for obtaining the water supply will depend on the conveyance method chosen to deliver the water from BBID to the City for use at the Tracy Hills Project and will be paid by the Tracy Hills Project developer. Required reviews and approvals will depend on the conveyance method, but will likely include the following entities: the City, Tracy Hills Project developer, BBID, DWR, USBR, and any exchange partner.

The planning, design and construction of the conveyance pipeline (if that conveyance option is chosen) will take a minimum of two years to complete once design is initiated. The City and the developer of the Tracy Hills Project are exploring these options with BBID, DWR and USBR and anticipate that this water supply source could come on-line by 2015.

[28] Source: City of Tracy Capital Improvement Program for FY08-09 through FY12-13.

Aquifer Storage and Recovery

As discussed above, the City constructed a new well in January 2004 (Production Well 8) (CIP 7558) that was designed to allow for both treated surface water injection and groundwater extraction purposes, in conjunction with the City's proposed ASR Program. In early 2009, the City signed a contract with a contractor to equip Well 8. In addition, the City has already installed a number of monitoring wells for use in the demonstration project for the proposed ASR Program.

The City is continuing to pursue regulatory approval for the ASR demonstration program from the Central Valley Regional Water Quality Control Board (RWQCB). Once the City completes the demonstration program (pilot testing), prepares required environmental documentation, and secures the required permits to operate an ASR Well Program, it is estimated that as much as 685 to 915 af/yr of potable water could be injected into the aquifer, assuming a 5-month continuous injection rate of 1.5 to 2.0 mgd. The City anticipates that, under an ASR program, approximately 3,000 acre-feet of high-quality groundwater would be available in drought years, thereby increasing the reliability of the City's water supply, starting in about 2015.

The City has included future appropriations of $200,000 per year for FY09-10 and FY10-11 in its CIP for acquisition of a permit from the RWQCB for a pilot test, performance of a pilot test, and preparation of an environmental impact report (CIP 7578). Operation and maintenance costs are estimated to be $210,000 per year.[29]

Diversion of Non-Potable Surface Water from Sugar Cut

The site designated for the Proposed Project is currently being farmed and irrigated with non-potable untreated surface water diverted from Sugar Cut, which has historically been used to irrigate the project site since at least 1912. The actual quantity of non-potable water use is not available, but is estimated to be about 4 to 6 af/ac/yr based on the types of crops currently planted on the property (primarily alfalfa). This equates to about 1,200 to 1,800 af/yr of non-potable water currently being used to irrigate the 298-acre project area by flood irrigation methods. This supply will be used initially for non-potable uses at the Proposed Project, and will be supplemented by shallow groundwater supplies if needed. The use of non-potable surface water from Sugar Cut for the Proposed Project is estimated to be up to 482 af/yr (based on buildout of the Proposed Project). This equates to less than half of the current water use on the project site. The proposed diversion of non-potable surface water from Sugar Cut associated with the Proposed Project will be for the interim only (only until recycled water supplies become available).

The costs of all facilities required to provide the non-potable surface water from Sugar Cut for use at the Proposed Project will be paid by proponents for the Proposed Project.

[29] Source: City of Tracy Capital Improvement Program for FY08-09 through FY12-13.

Recycled Water

In 2002, the City adopted a Recycled and Non-Potable Water Ordinance requiring all new subdivisions, to the extent practicable, to install the required infrastructure (such as dual distribution pipelines) to provide recycled water to meet non-potable water demands at parks, golf courses, athletic fields, schools, median island landscapes, and industrial sites.

Currently, recycled water is being considered as a water supply on a project-by-project basis, primarily as a potable water offset. This is the case with the proposed Tracy Gateway and Tracy Hills Projects wherein wastewater treatment scalping plants are proposed to treat wastewater from each project area to a tertiary level for use for landscape irrigation within and adjacent to the project areas. Such projects are being funded by project proponents.

The City recently expanded its main wastewater treatment plant (WWTP), including improvements to the City's existing treatment facilities, construction of additional facilities at the existing WWTP site, as well as construction of a second outfall pipe and diffuser in Old River. These improvements increased the treatment capacity from 9 mgd to 16 mgd (average daily flow) (equivalent to almost 18,000 af//yr), and provided tertiary-level treatment meeting Title 22 requirements. In 2025, the wastewater flow to the City's main wastewater treatment plant is estimated to be 14.5 mgd, or about 16,250 af/yr. Based on this, it appears that adequate tertiary-treated wastewater (recycled water) will be available, as the estimated non-potable demand for the Proposed Project and other planned projects in the City (e.g., Tracy Gateway and Tracy Hills) of 5,326 af/yr equates to only about 33 percent of the total wastewater flow in 2025.

Approvals and permits for the production, distribution and use of recycled water will be required from the RWQCB and the California Department of Public Health (DPH). The costs to construct recycled water transmission pipelines from the City's wastewater treatment plant to the project site, as well as all on-site recycled water distribution pipelines and related facilities, will be paid by proponents for the Proposed Project.

DRAFT

WATER SUPPLY ASSESSMENT APPROVAL PROCESS

10910 (g)(1) Subject to paragraph (2), the governing body of each public water system shall submit the assessment to the city or county not later than 90 days from the date on which the request was received. The governing body of each public water system, or the city or county if either is required to comply with this act pursuant to subdivision (b), shall approve the assessment prepared pursuant to this section at a regular or special meeting.

10911 (b) The city or county shall include the water supply assessment provided pursuant to Section 10910, and any information provided pursuant to subdivision (a), in any environmental document prepared for the project pursuant to Division 13 (commencing with Section 21000) of the Public Resources Code.

The Tracy City Council must approve this WSA at a regular or special meeting. Furthermore, the City must include this WSA in the Draft Environmental Impact Report (EIR) being prepared for the Proposed Project.

DRAFT

REFERENCES

Bookman-Edmonston, *Summary of Groundwater Conditions November 2005 through November 2007*, prepared for City of Tracy, January 28, 2008.

California Department of Water Resources, *California's Groundwater Water, Bulletin 118*, February 2003.

California Department of Water Resources, California's Groundwater Water, Bulletin 118, San Joaquin Valley Groundwater Basin-Tracy Sub-basin Description, January 20, 2006.

California Department of Water Resources, *Guidebook for Implementation of Senate Bill 610 and Senate Bill 221 of 2001*, October 8, 2003.

City of Tracy, *City of Tracy Program Budget Fiscal Year 2008-2009: Capital Improvement Program, Group 75 Water Improvements, Fiscal Year 2008-2009 through 2012-2013*, prepared by City of Tracy Finance and Administrative Services Department, July 2008.

City of Tracy, *City of Tracy General Plan*, July 20, 2006.

City of Tracy, *City of Tracy Water Inventory Report*, August 1, 2006.

City of Tracy, *City of Tracy Water Inventory Report*, February 6, 2007.

City of Tracy, *City of Tracy Water Inventory Report*, February 5, 2008.

City of Tracy, *City of Tracy Water Inventory Report*, February 17, 2009.

De Novo Planning Group, *Holly Sugar Sports Park Notice of Preparation and Initial Study*, prepared for City of Tracy Department of Development and Engineering Services, December 24, 2008.

Erler & Kalinowski, Inc., *City of Tracy Urban Water Management Plan*, December 2005.

GEI Consultants, *Tracy Regional Groundwater Management Plan*, prepared for the City of Tracy, March 2007.

Hotchkiss, W.R. and Balding, G.O., *Geology, Hydrology and Water Quality of the Tracy-Dos Palos Area, San Joaquin Valley, California*, USGS Open-File Report, 1971.

Kennedy/Jenks Consultants, *City of Tracy Water Master Plan*, 1994.

Kennedy/Jenks/Chilton, *Tracy Area Groundwater Yield Evaluation*, Appendix B, Table B-2, 1990.

Pacific Municipal Consultants, *Groundwater Management Policy Mitigated Negative Declaration*, prepared for the City of Tracy, April 2001.

Sorenson, S.K., *Chemical Quality of Groundwater in San Joaquin and Part of Contra Costa Counties, California*, Water Resources Investigation 81-26, USGS, 1981.

Stoddard & Associates, *Groundwater Management Plan for the Northern Agencies in the Delta-Mendota Canal Service Area and a Portion of San Joaquin County*, Revised April 1996.

DRAFT

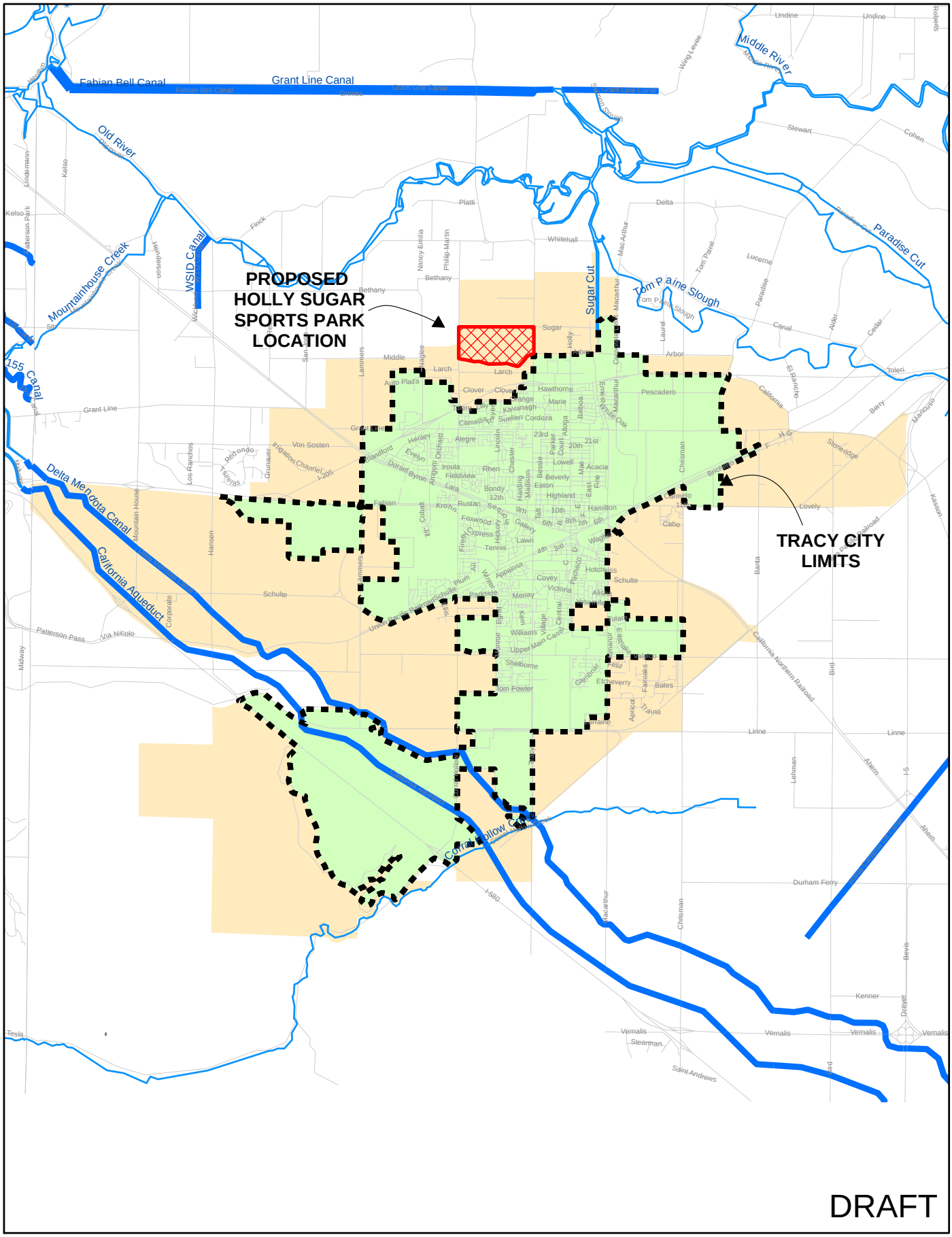

LEGEND:

- Holly Sugar Sports Park Boundary
- Natural Waterway
- Canal or Aqueduct
- Streets
- City Limits
- Sphere of Influence

N

0 0.5 1 2
Scale in Miles

FIGURE 1

Water Supply Assessment for the Holly Sugar Sports Park

CITY OF TRACY SPHERE OF INFLUENCE

WEST YOST ASSOCIATES
Consulting Engineers

O:\Clients\404 City of Tracy\02-08-74 Holly Sugar Sports Park WSA\GIS\Fig01_Location.mxd 3/31/2009

DRAFT

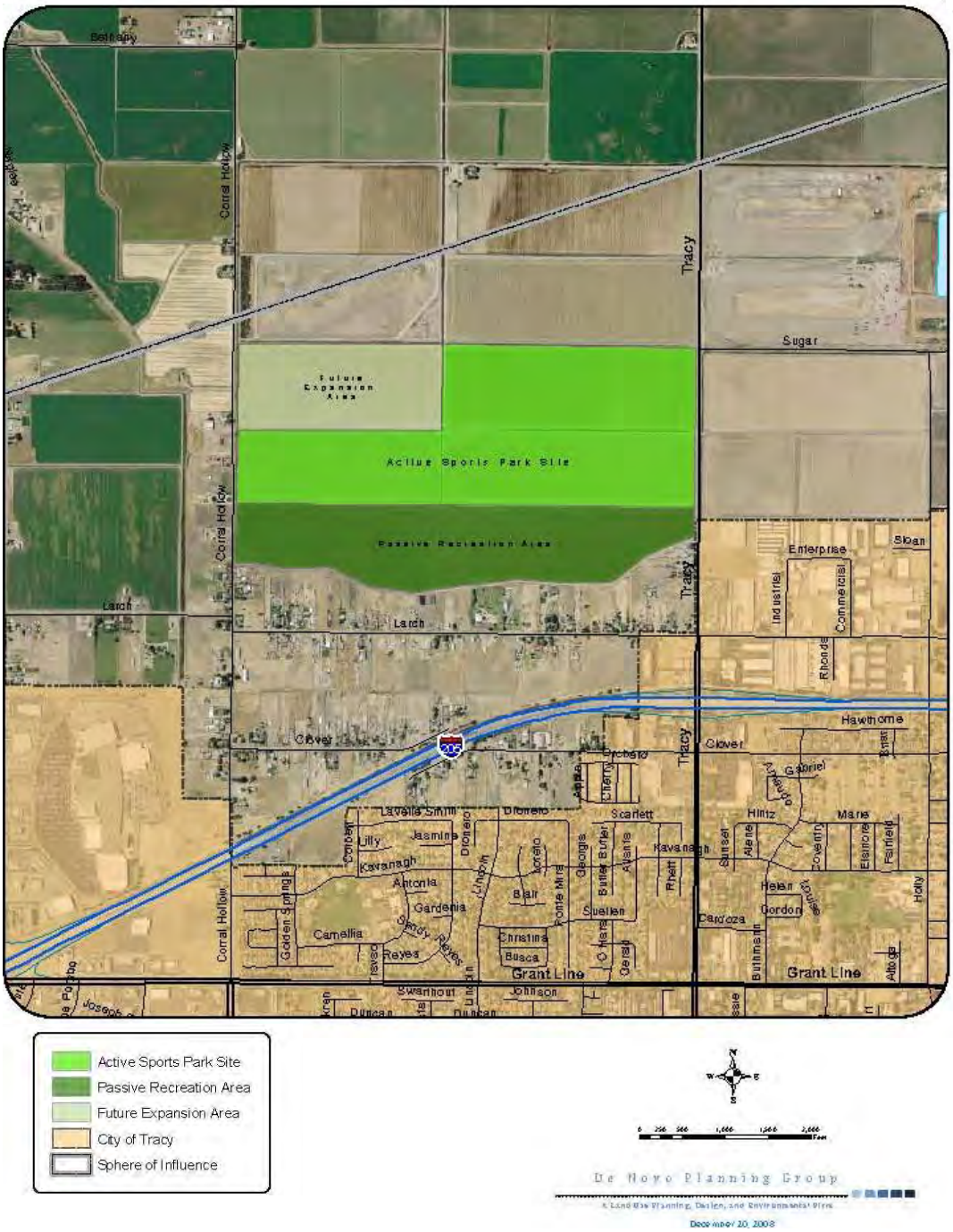

FIGURE 2

Water Supply Assessment for the Holly Sugar Sports Park

PROJECT SITE MAP

WEST YOST ASSOCIATES
Consulting Engineers

QTY	DESC.
4	U10 SOCCER FIELDS
3	U12 SOCCER FIELDS
7	U14-U19 SOCCER FIELDS
2	396' OUTFIELD BASEBALL FIELDS
10	220' BASEBALL FIELDS

QTY	DESC.
4	220' BASEBALL FIELDS (STADIUM)
4	200' SOFTBALL FIELDS
1	200' SOFTBALL FIELD (STADIUM)
4	FOOTBALL FIELDS
1	FOOTBALL / SOCCER FIELD (STADIUM)
4	PLAY AREAS

PARCEL A
FUTURE POTENTIAL USES:
PLANTING BUFFER
ARBORETUM
CLASS 1 BIKE PATH
TRAILS
DISC GOLF

NORTH

Conceptual Design
Holly Sugar Sports Park
City Of Tracy

Date: 11/05/08
Project No.: 0805100

VERDE DESIGN

LANDSCAPE ARCHITECTURE
CIVIL ENGINEERING
SPORT PLANNING & DESIGN
3453 The Alameda, Ste. 200
Santa Clara, CA 95050
tel: 408.983.7200
fax: 408.983.7300
www.verdedesign.com

DRAFT

De Novo Planning Group

A Land Use Planning, Design, and Environmental Firm

November 20, 2008

FIGURE 3

Water Supply Assessment for the Holly Sugar Sports Park

CONCEPTUAL DESIGN FOR THE HOLLY SUGAR SPORTS PARK

WEST YOST ASSOCIATES
Consulting Engineers

DRAFT

Figure 4. City of Tracy Historical Potable Water Demand

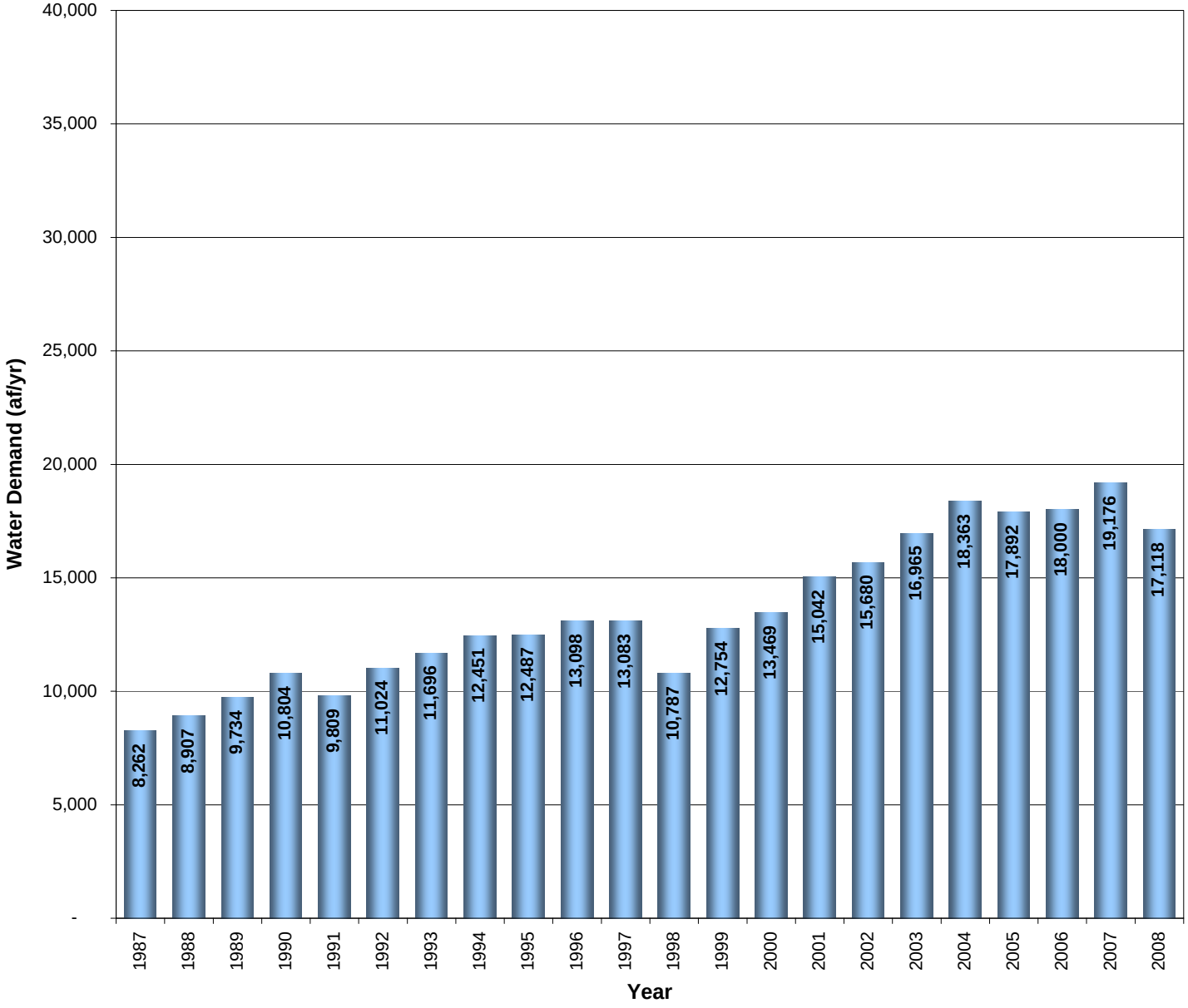

Legend:

Historical Water Demand

Notes:

(1) Source: City of Tracy Water Inventory Report, February 17, 2009. Based on total water production; includes unaccounted for water.

West Yost Associates
o:\c\404\02-08-74\wp\hollysugartabandfig
Last Revised: 03/06/09

City of Tracy
WSA for the Holly Sugar Sports Park

DRAFT

Figure 5. City of Tracy Historical and Projected Future Potable Water Demand

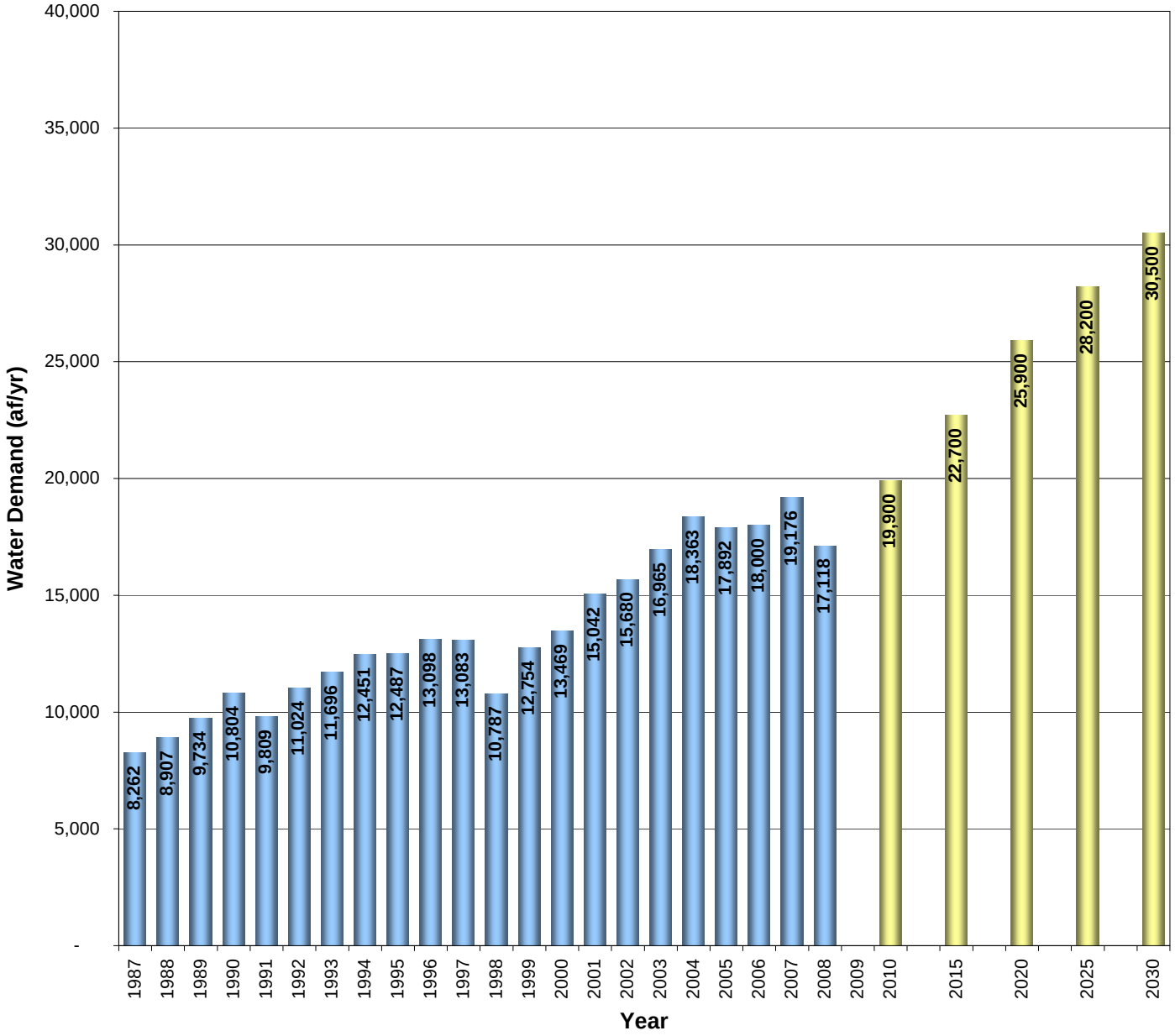

Legend:

Projected Future Demand (per 2005 UWMP)

Historical Water Demand (see Figure 4)

Notes:

(1) Historical water demand (Source: City of Tracy Water Inventory Report, February 17, 2009). Based on total water production; includes unaccounted for water.

(2) Projected future demand includes projected water demands for existing users, planned future uses, and other projected future projects. Includes unaccounted for water of 7.5 percent. (Source for 2010 to 2025 projections: Table 8 Projected Potable Water Demand by Water Use Sector, City of Tracy UWMP, December 2005. Projection for 2030 based on an assumed incremental increase equal to the increase from 2020 to 2025.)

West Yost Associates
o:\c\404\02-08-74\wp\hollysugartabandfig
Last Revised: 03/06/09

City of Tracy
WSA for the Holly Sugar Sports Park

DRAFT

Figure 6. City of Tracy Projected Future Water Demand by Development Stage

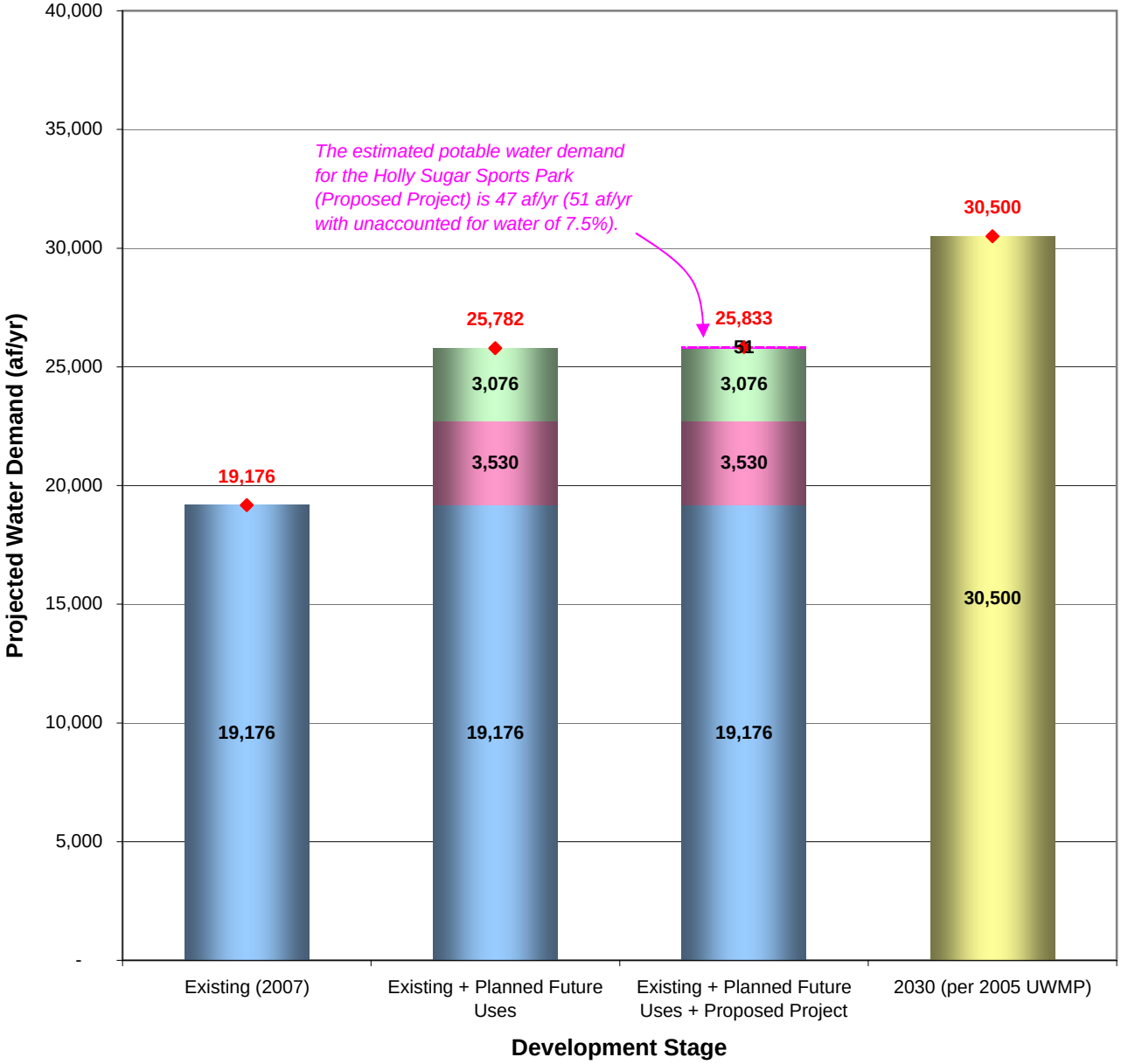

Legend:

- Existing Users, Approved and Anticipated Projects, Proposed Project and Other Future Projects (2030)
- Proposed Project
- Anticipated Development Projects
- Approved Development Projects
- Existing Users (2007)
- Total Water Demand

Notes:

(1) Projected water demands for Planned Future Uses (Approved and Anticipated Development Projects) are based on current development activity and planning information. Includes unaccounted for water of 7.5 percent.

(2) The potable water demand for the Proposed Project (calculated in Table 4) is 47 af/yr (does not include unaccounted for water). The total water demand is 51 af/yr, which includes 7.5 percent unaccounted for water.

(3) Projected future demand for the Planned Future Uses (approved Development Projects) has been revised to not include the previously projected water demand identified for the Tracy Gateway Project (which will be receiving its potable water supply through a recycled water exchange program), but does include projected water demand for the Ellis Specific Plan and the Downtown Specific Plan.

(4) Projected future water demand in 2030 includes projected water demands for existing users, planned future uses, and other projected future projects in the Urban Reserve Areas. Includes unaccounted for water of 7.5 percent. (Source: Table 8 Projected Potable Water Demand by Water Use Sector, City of Tracy UWMP, December 2005. Projection for 2030 based on an assumed incremental increase equal to the increase from 2020 to 2025.)

West Yost Associates
o:\c\404\02-08-74\wp\hollysugartabandfig
Last Revised: 03/06/09

City of Tracy
WSA for the Holly Sugar Sports Park

DRAFT

Figure 7. City of Tracy Historical Potable Water Supplies

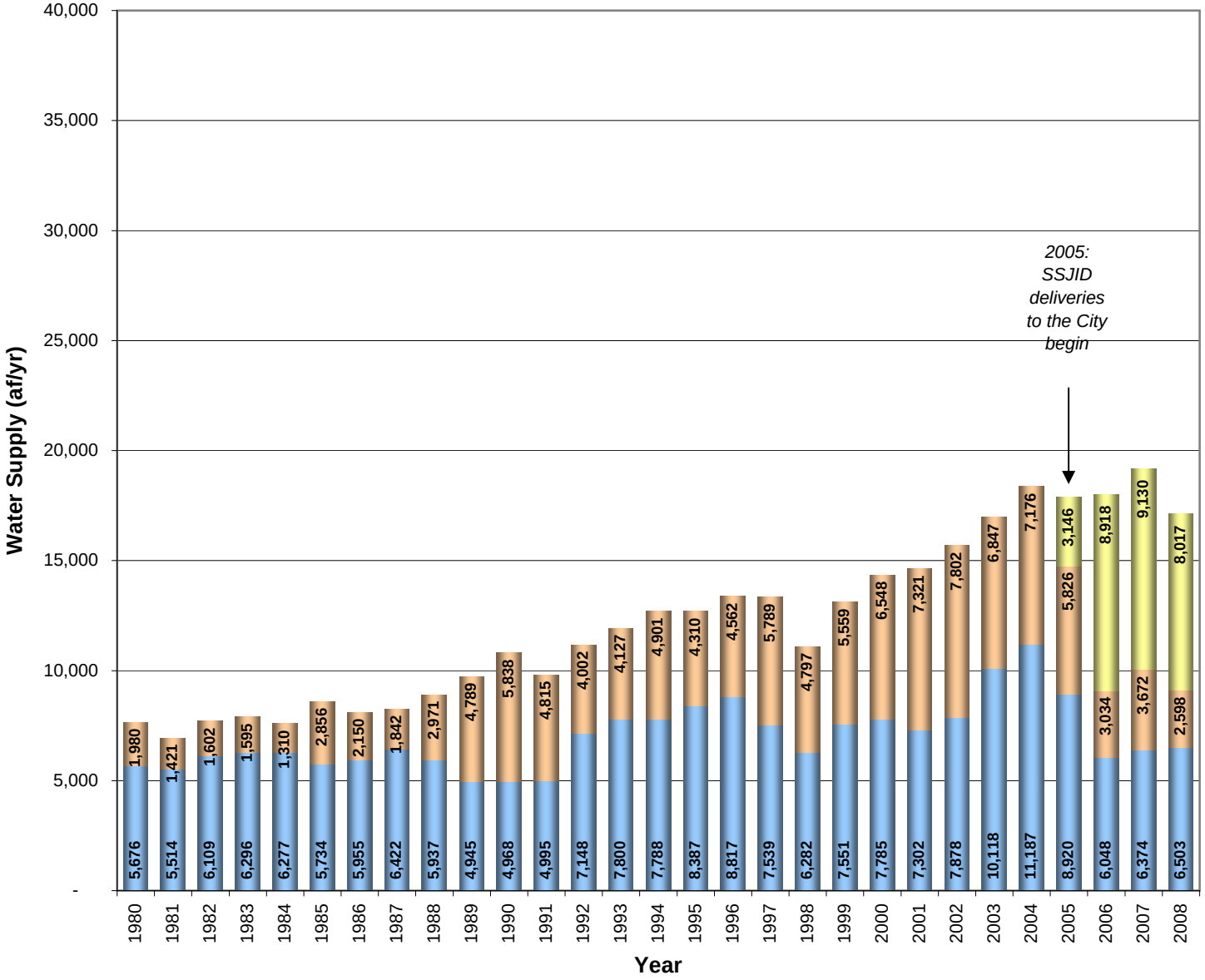

Legend:

- SSJID (SCSWSP)
- Groundwater
- CVP Deliveries

Notes:

(1) Source: 1980-2001: City of Tracy Water Production Data. 2002-2008: City of Tracy Water Inventory Reports.

(2) 2004 CVP deliveries include 1,865 af from the BCID CVP assignment and 965 af from the WSID CVP assignment.

(3) SSJID began deliveries to the City of Tracy in 2005.

West Yost Associates
o:\c\404\02-08-74\wp\hollysugartabandfig
Last Revised: 03/06/09

City of Tracy
WSA for the Holly Sugar Sports Park

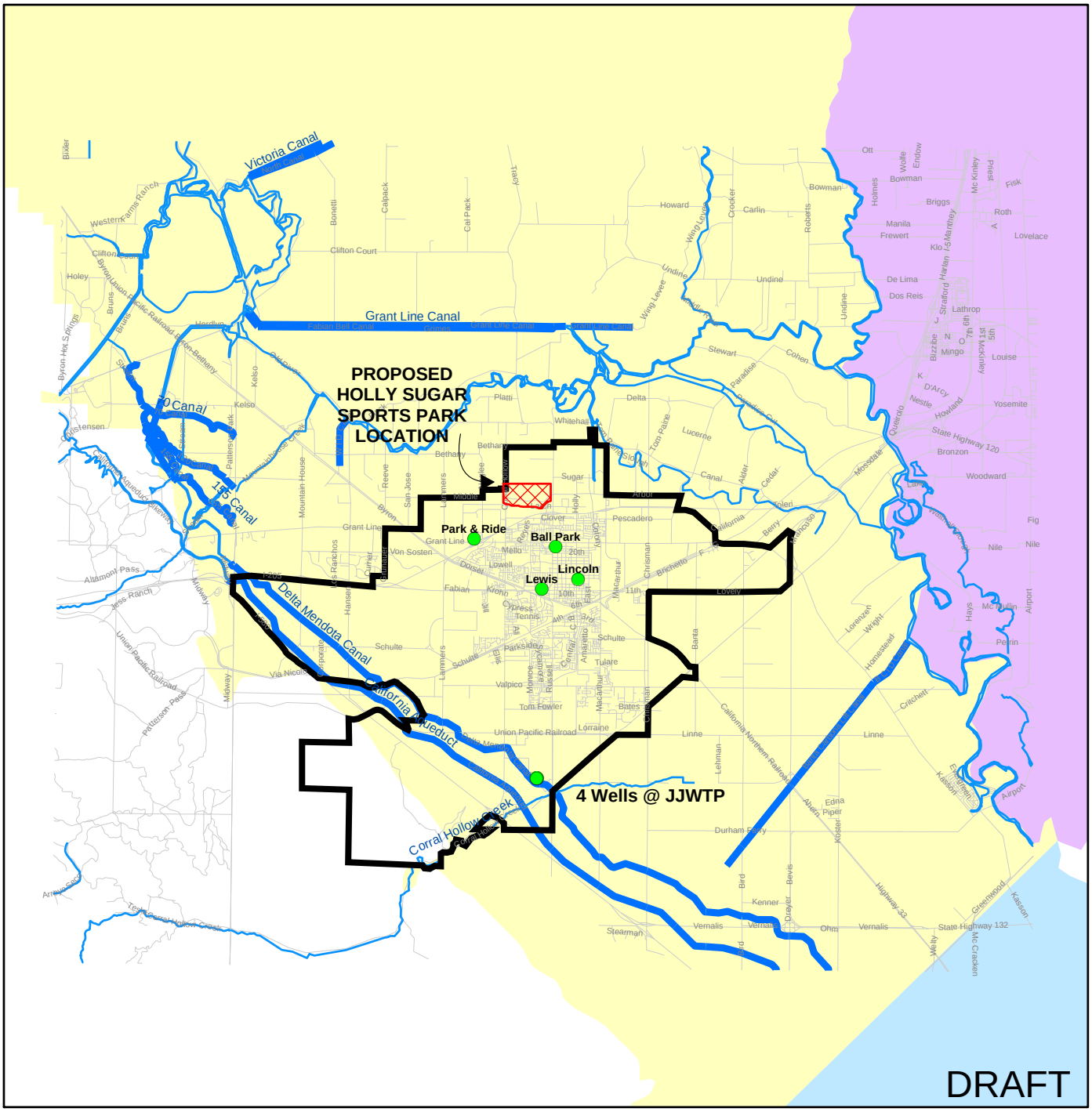

Source for groundwater basin boundaries:
California Department of Water Resources website at
www.groundwater.water.ca.gov/bulletin 118

N

0 0.4 0.8 1.6
Scale in Miles

LEGEND:

- City Municipal Supply Well
- Holly Sugar Sports Park Boundary
- Sphere of Influence
- Natural Waterway
- Canal or Aqueduct
- Streets

Groundwater Basins

- Delta-Mendota Groundwater Sub-basin
- Eastern San Joaquin Groundwater Sub-basin
- Tracy Groundwater Sub-basin

FIGURE 8

Water Supply Assessment for the Holly Sugar Sports Park

GROUNDWATER BASIN & WELL LOCATIONS

YOST ATES Engineers

O:\Clients\404 City of Tracy\02-08-74 Holly Sugar Sports Park WSA\GIS\Fig08_Groundwater.mxd 5/5/2009

DRAFT

Figure 9. City of Tracy Existing and Additional Potable Water Supply vs. Demand in Normal Years

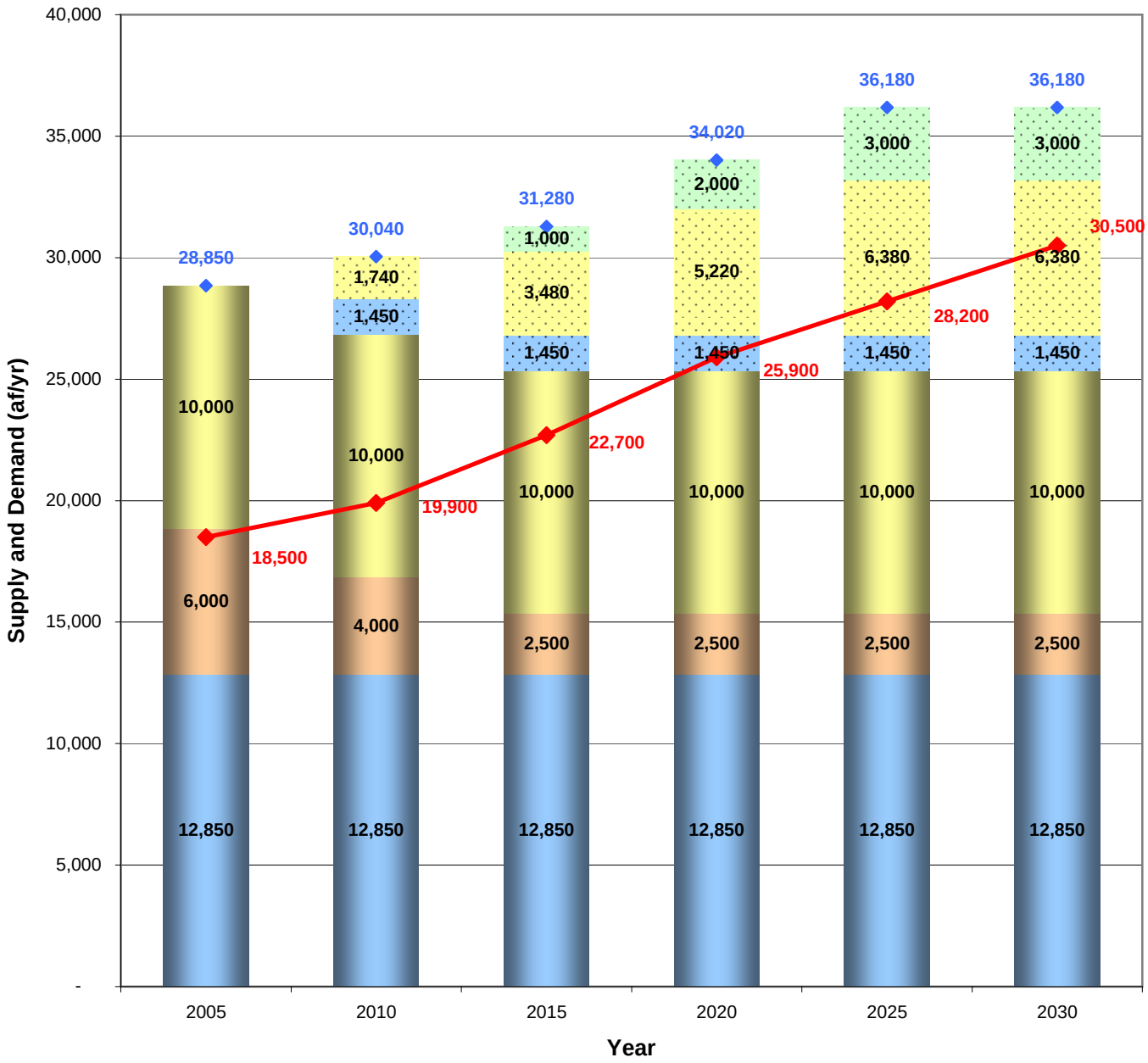

Legend:

- Future ASR Water Banking
- Future BBID (pre-1914 rights)
- Future CVP Surface Water (BBID USBR assignment)(Ag Reliability)
- Future CVP Surface Water (WSID USBR Option)(Ag Reliability)
- Future Semitropic Water Storage Bank (Permanent Agreement)
- SSJID (SCWSP)
- Groundwater
- CVP Surface Water Deliveries
- Total Supply
- Projected Water Demand

Notes:

(1) Water demand projection per Table 8 of City of Tracy 2005 UWMP. Includes unaccounted for water of 7.5 percent. Projection for 2030 based on an assumed incremental increase equal to the increase from 2020 to 2025.

(2) Though the City can sustainably extract up to 9,000 af/yr of groundwater, the City is planning to reduce its groundwater extraction in future years to increase the overall quality of its water supply. The City will continue to rely on groundwater for peaking and drought and emergency supplies, up to 9,000 af/yr, on an as-needed basis.

(3) Source: Table 11 Current and Projected Water Supply Allocations-Normal Year, City of Tracy UWMP, December 2005.

(4) CVP deliveries include those from the City's CVP Contract and Assignments from BCID and WSID. Includes 10,000 af @ M&I normal year reliability of 85 percent and 7,500 af @ Ag normal year reliability of 58 percent.

(5) Supplies from Semitropic Water Storage Bank and ASR are considered to be dry year supplies and are assumed to be zero in normal years.

West Yost Associates
o:\c\404\02-08-74\wp\hollysugartabandfig
Last Revised: 05/03/09

City of Tracy
WSA for the Holly Sugar Sports Park

DRAFT

Figure 10. City of Tracy Existing and Additional Potable Water Supply vs. Demand in a Single Dry Year

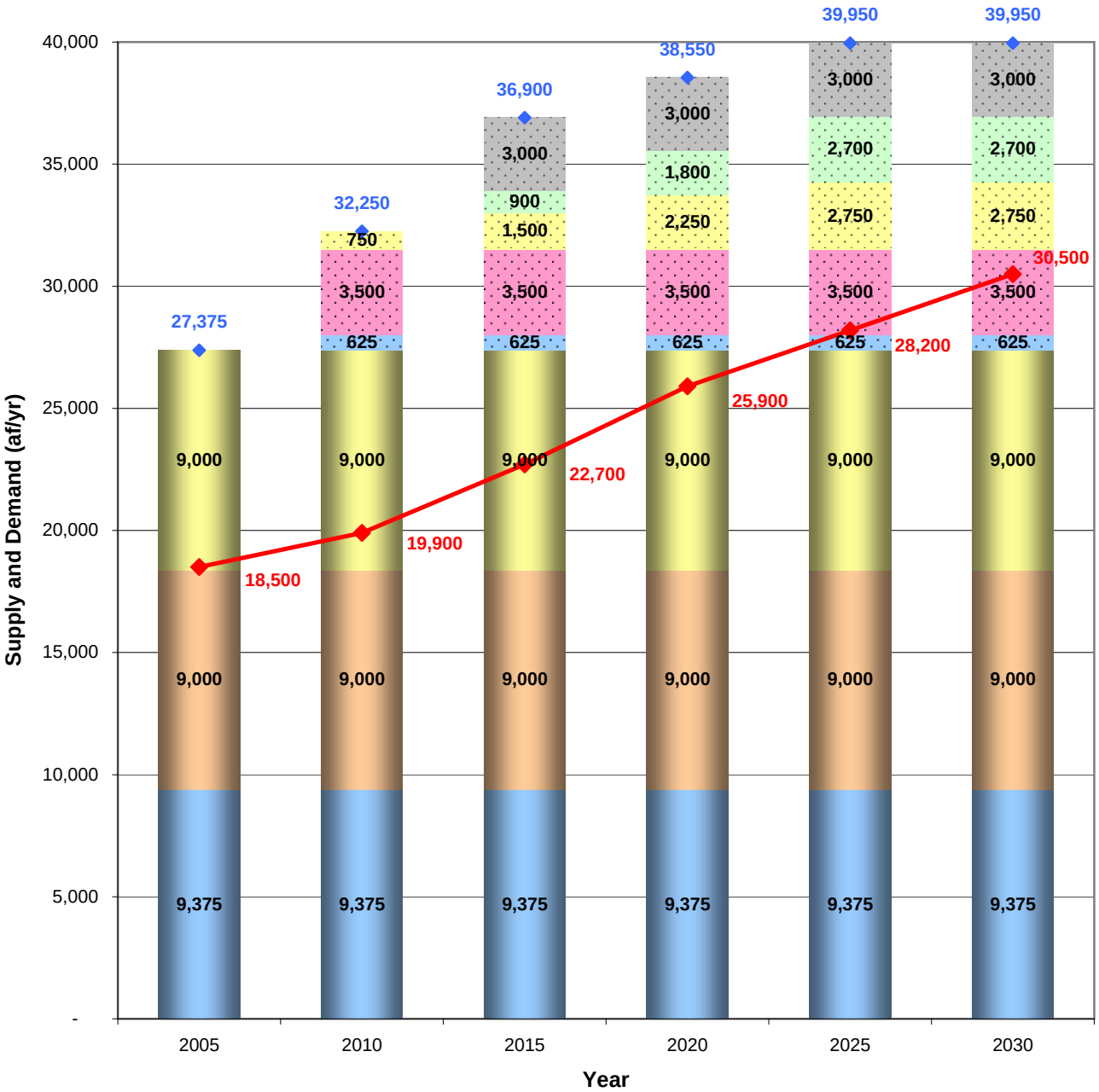

Legend:

- Future ASR Water Banking
- Future BBID (pre-1914 rights)
- Future CVP Surface Water (BBID USBR assignment)(Ag Reliability)
- Future Semitropic Water Storage Bank (Permanent Agreement)
- Future CVP Surface Water (WSID USBR Option)(Ag Reliability)
- SSJID (SCWSP)
- Groundwater
- CVP Surface Water Deliveries
- Total Supply
- Projected Water Demand

Notes:

(1) Water demand projection per Table 8 of City of Tracy 2005 UWMP. Includes unaccounted for water of 7.5 percent. Projection for 2030 based on an assumed incremental increase equal to the increase from 2020 to 2025.

(2) Consistent with the City's 2005 UWMP, no conservation has been assumed for single dry years; however, it is anticipated that water conservation will occur as a result of customer awareness of water supply conditions; assumed water conservation for single dry years will be re-evaluated in the City's 2010 UWMP update.

(3) Though the City can sustainably extract up to 9,000 af/yr of groundwater, the City is planning to reduce its groundwater extraction in future years to increase the overall quality of its water supply. The City will continue to rely on groundwater for peaking and drought and emergency supplies, up to 9,000 af/yr, on an as-needed basis.

(4) Source: Table 12 Current and Projected Water Supply Allocations-Single Dry Year, City of Tracy UWMP, December 2005.

(5) CVP deliveries include those from the City's CVP Contract and Assignments from BCID and WSID. Includes 10,000 af @ M&I single dry year reliability of 75 percent and 7,500 af @ Ag single dry year reliability of 25 percent.

(6) In 2006, the City entered into a pilot agreement with Semitropic Water Storage Bank which provides for up to 1,000 af of storage for the City of Tracy in the Semitropic Water Storage Bank. By 2010, the City anticipates having a permanent agreement in place with Semitropic for up to 10,500 af of total storage in Semitropic, allowing for annual withdrawals of up to 3,500 af/yr when needed (as shown on this figure for a single dry year).

DRAFT

Figure 11. City of Tracy Existing and Additional Potable Water Supply vs. Demand in Multiple Dry Years

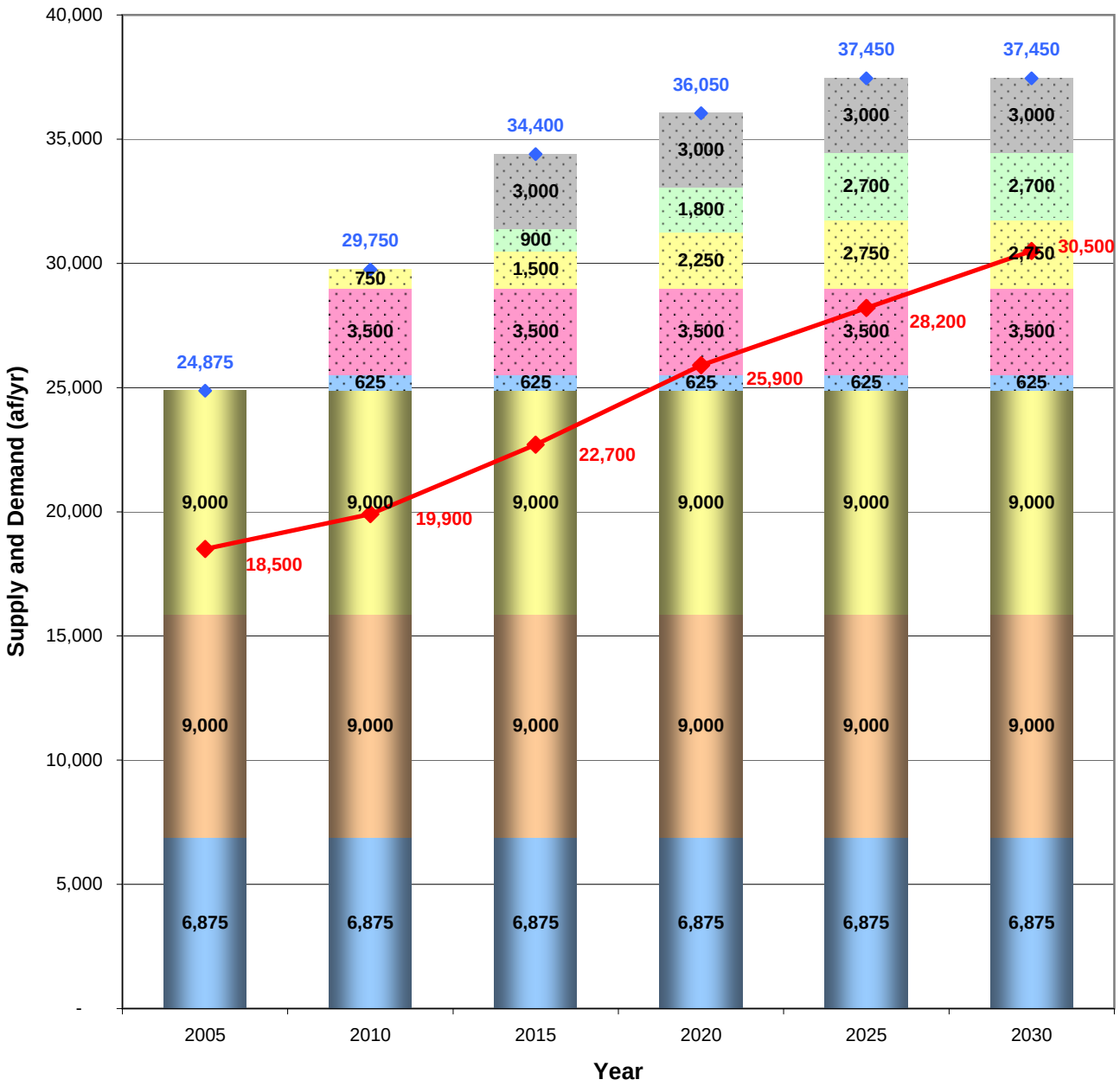

Legend:

- Future ASR Water Banking
- Future BBID (pre-1914 rights)
- Future CVP Surface Water (BBID USBR assignment)(Ag Reliability)
- Future Semitropic Water Storage Bank (Permanent Agreement)
- Future CVP Surface Water (WSID USBR Option)(Ag Reliability)
- SSJID (SCWSP)
- Groundwater
- CVP Surface Water Deliveries
- Total Supply
- Projected Water Demand

Notes:

(1) Water demand projection per Table 8 of City of Tracy 2005 UWMP. Includes unaccounted for water of 7.5 percent. Projection for 2030 based on an assumed incremental increase equal to the increase from 2020 to 2025.

(2) Consistent with the City's 2005 UWMP, no conservation has been assumed for multiple dry years; however, it is anticipated that water conservation will occur as a result of customer awareness of water supply conditions; assumed water conservation for multiple dry years will be re-evaluated in the City's 2010 UWMP update.

(3) Though the City can sustainably extract up to 9,000 af/yr of groundwater, the City is planning to reduce its groundwater extraction in future years to increase the overall quality of its water supply. The City will continue to rely on groundwater for peaking and drought and emergency supplies, up to 9,000 af/yr, on an as-needed basis.

(4) Source: Table 13 Current and Projected Water Supply Allocations-Multiple Dry Years, City of Tracy UWMP, December 2005.

(5) CVP deliveries include those from the City's CVP Contract and Assignments from BCID and WSID. Includes 10,000 af @ M&I multiple dry year reliability of 50 percent and 7,500 af @ Ag multiple dry year reliability of 25 percent.

(6) In 2006, the City entered into a pilot agreement with Semitropic Water Storage Bank which provides for up to 1,000 af of storage for the City of Tracy in the Semitropic Water Storage Bank. By 2010, the City anticipates having a permanent agreement in place with Semitropic for up to 10,500 af of total storage in Semitropic, allowing for annual withdrawals of up to 3,500 af/yr when needed (as shown on this figure for multiple dry years).

West Yost Associates
o:\c\404\02-08-74\wp\hollysugartabandfig
Last Revised: 05/03/09

City of Tracy
WSA for the Holly Sugar Sports Park

DRAFT

Figure 12. City of Tracy Existing and Additional Potable Water Supply vs. Demand in an Extreme Dry Year

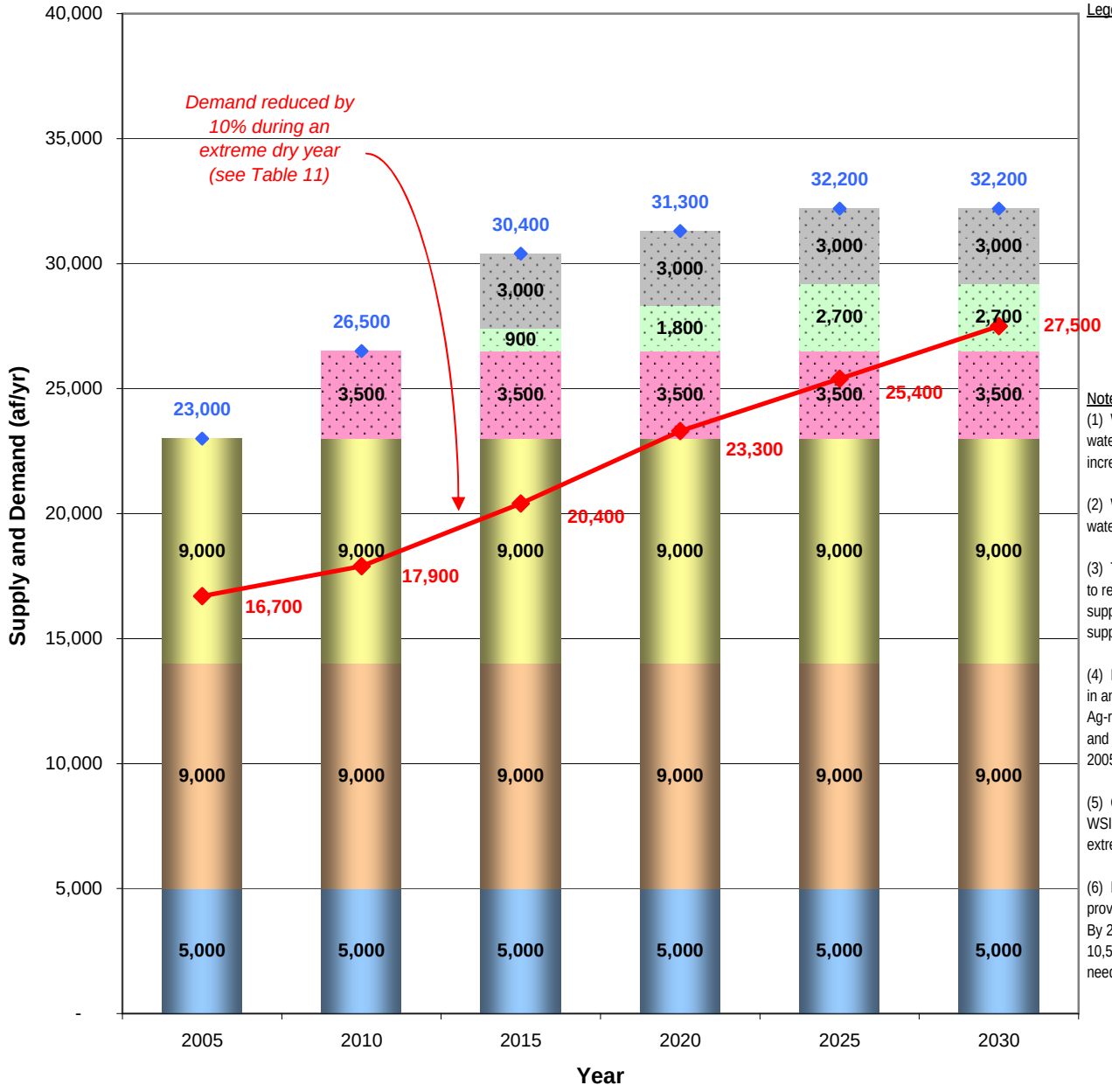

Legend:

- Future ASR Water Banking
- Future BBID (pre-1914 rights)
- Future CVP Surface Water (BBID USBR assignment)(Ag Reliability)
- Future Semitropic Water Storage Bank (Permanent Agreement)
- Future CVP Surface Water (WSID USBR Option)(Ag Reliability)
- SSJID (SCWSP)
- Groundwater
- CVP Surface Water Deliveries
- Total Supply
- Projected Water Demand

Notes:

(1) Water demand projection per Table 8 of City of Tracy 2005 UWMP. Includes unaccounted fo water of 7.5 percent. Projection for 2030 based on an assumed incremental increase equal to the increase from 2020 to 2025.

(2) Water demand based on a 10 percent reduction from normal water demand due to mandatec water conservation measures in an extreme dry year (1977 hydrologic conditions).

(3) Though the City can sustainably extract up to 9,000 af/yr of groundwater, the City is planning to reduce its groundwater extraction in future years to increase the overall quality of its water supply. The City will continue to rely on groundwater for peaking and drought and emergency supplies, up to 9,000 af/yr, on an as-needed basis.

(4) In the City's 2005 UWMP, the Ag Reliability for CVP supplies was stated as being 13 percent in an Extreme Dry Year. Due to on-going drought conditions in California, as of March 2009, the Ag-reliability is currently set at 0 percent, and has been reflected here. Source: Table 14 Current and Projected Water Supply Allocations-Extreme Dry Year, City of Tracy UWMP, December 2005.

(5) CVP deliveries include those from the City's CVP Contract and Assignments from BCID and WSID. Includes 10,000 af @ M&I extreme dry year reliability of 50 percent and 7,500 af @ Ag extreme dry year reliability of 0 percent.

(6) In 2006, the City entered into a pilot agreement with Semitropic Water Storage Bank which provides for up to 1,000 af of storage for the City of Tracy in the Semitropic Water Storage Bank. By 2010, the City anticipates having a permanent agreement in place with Semitropic for up to 10,500 af of total storage in Semitropic, allowing for annual withdrawals of up to 3,500 af/yr when needed (as shown on this figure for an extreme dry year).

DRAFT

Figure 13. City of Tracy 2007 Potable Water Supplies vs. Demand with Planned Future Uses and Proposed Project

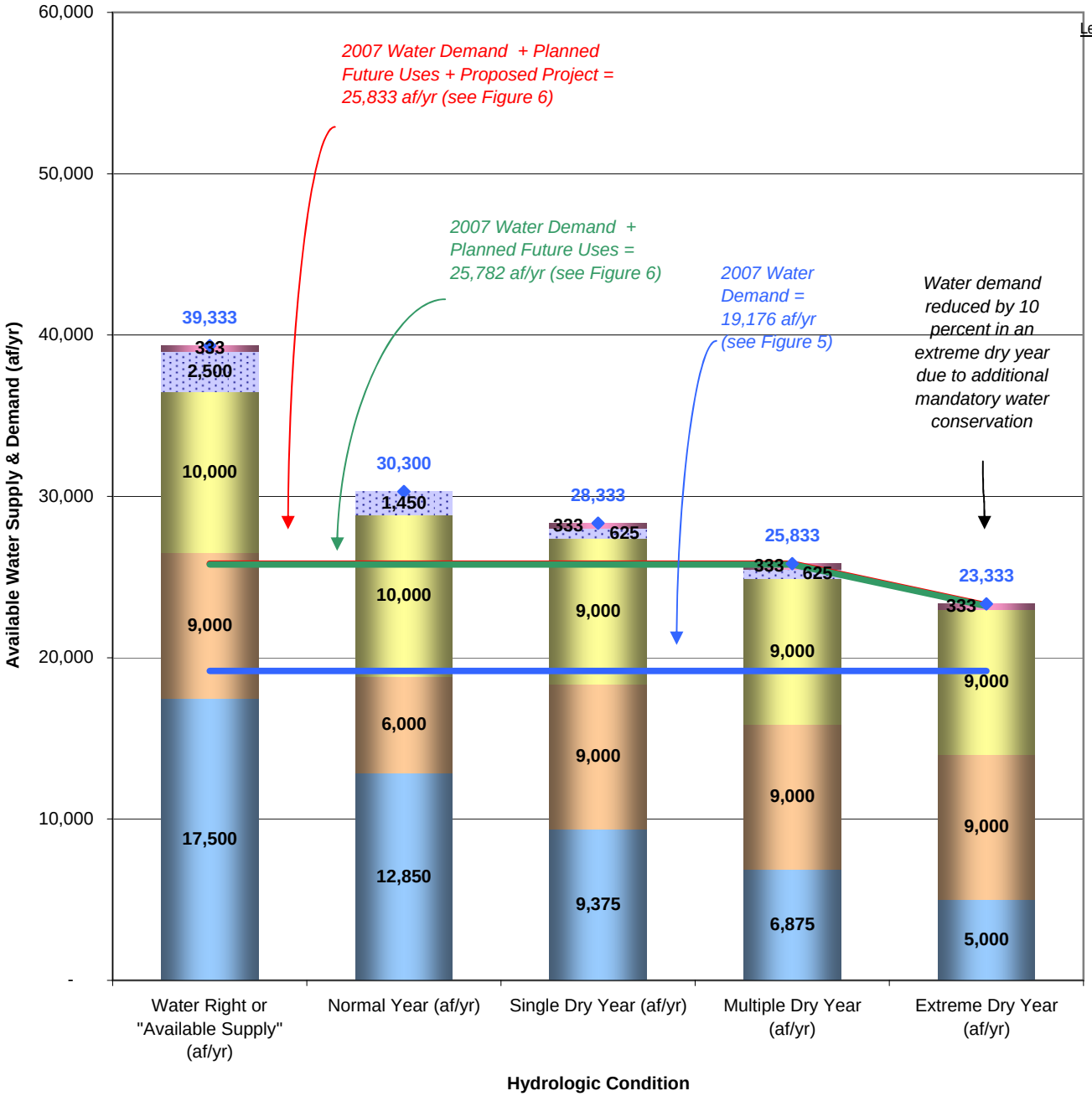

Legend:

- Semitropic Water Storage Bank (Pilot Agreement)
- Future CVP Surface Water (WSID USBR Option)(Ag Reliability)
- SSJID (SCSWSP)
- Groundwater
- CVP Surface Water Deliveries
- Total Supply
- 2007 Water Demand + Planned Future Uses
- 2007 Water Demand + Planned Future Uses + Proposed Project
- 2007 Water Demand

Notes:

(1) Source: Tables 11, 12, 13 and 14, City of Tracy UWMP, December 2005.

(2) Consistent with the City's 2005 UWMP, no conservation has been assumed for single dry or multiple dry years; however, it is anticipated that water conservation will occur as a result of customer awareness of water supply conditions; assumed water conservation for multiple dry years will be re-evaluated in the City's 2010 UWMP.

(3) CVP deliveries include those from the City's CVP Contract and Assignments from BCID and WSID.

(4) Supplies from Semitropic Water Storage Bank are considered to be dry year supplies and are assumed to be zero in normal years.

(5) In 2006, the City entered into a pilot agreement with Semitropic Water Storage Bank which provides for up to 1,000 af of storage (with a withdrawal of up to 333 af/yr) for the City of Tracy in the Semitropic Water Storage Bank. The pilot agreement was intended to establish procedures for deposit and withdrawal of water supplies. Water banked under this pilot agreement would also be available to the City if needed in dry years (as shown on this figure for single dry, multiple dry and extreme dry years). By 2010, the City anticipates having a permanent agreement in place with Semitropic for up to 10,500 af of total storage in Semitropic, allowing for annual withdrawals of up to 3,500 af/yr when needed (see Figure 14).

(6) Though the City can sustainably extract up to 9,000 af/yr of groundwater, the City is planning to reduce its groundwater extraction in future years to increase the overall quality of its water supply. The City will continue to rely on groundwater for peaking and drought and emergency supplies, up to 9,000 af/yr, on an as-needed basis.

(7) The WSID USBR Option for additional CVP surface water supplies is to be exercised by the City in conjunction with the approval of the Downtown Specific Plan Project.

West Yost Associates
o:\c\404\02-08-74\wp\hollysugartabandfig
Last Revised: 05/03/09

City of Tracy
WSA for the Holly Sugar Sports Park

DRAFT

Figure 14. City of Tracy Existing and Additional Potable Water Supplies at Year 2030 vs. Future Demand

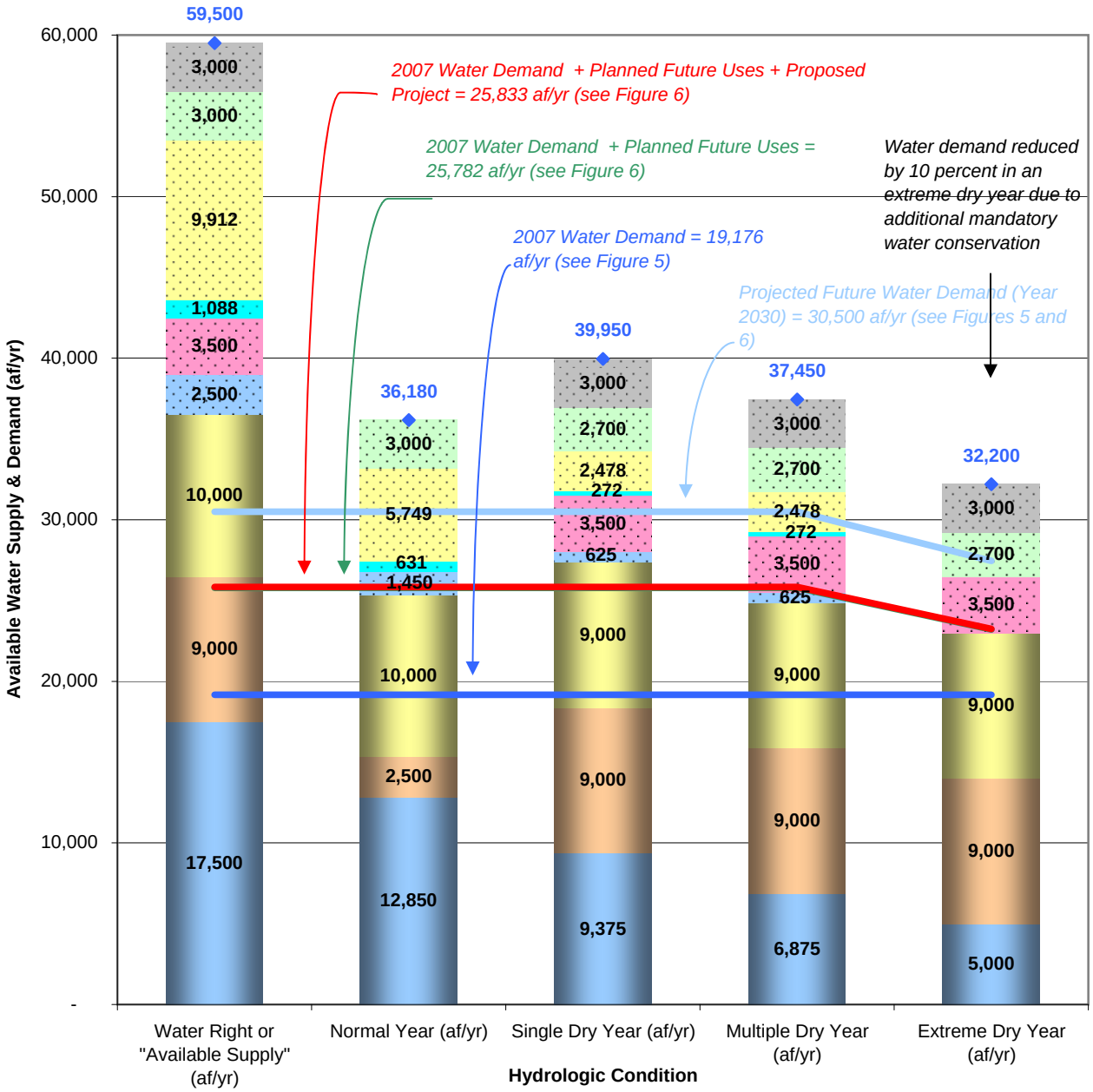

Legend:

- Future ASR Water Banking
- Future BBID (pre-1914 rights)
- Future CVP Surface Water (BBID USBR assignment)(Ag Reliability)
- Future CVP Surface Water (BBID USBR assignment)(annexation of 320 acres)(Ag Reliability)
- Future Semitropic Water Storage Bank (Permanent Agreement)
- Future CVP Surface Water (WSID USBR Option)(Ag Reliability)
- SSJID (SCSWSP)
- Groundwater
- CVP Surface Water Deliveries
- Total Supply
- Projected Future Water Demand (Year 2030)
- 2007 Water Demand + Planned Future Uses + Proposed Project
- 2007 Water Demand + Planned Future Uses
- 2007 Water Demand

Notes:

(1) Source: Tables 11, 12, 13 and 14, City of Tracy UWMP, December 2005.

(2) Consistent with the City's 2005 UWMP, no conservation has been assumed for single dry or multiple dry years; however, it is anticipated that water conservation will occur as a result of customer awareness of water supply conditions; assumed water conservation for multiple dry years will be re-evaluated in the City's 2010 UWMP.

(3) Supplies from Semitropic Water Storage Bank and ASR are considered to be dry year supplies and are assumed to be zero in normal years.

(4) In 2006, the City entered into a pilot agreement with Semitropic Water Storage Bank which provides for up to 1,000 af of storage (with a withdrawal of up to 333 af/yr) for the City of Tracy in the Semitropic Water Storage Bank. The pilot agreement was intended to establish procedures for deposit and withdrawal of water supplies. Water banked under this pilot agreement would also be available to the City if needed in dry years. By 2010, the City anticipates having a permanent agreement in place with Semitropic for up to 10,500 af of total storage in Semitropic, allowing for annual withdrawals of up to 3,500 af/yr when needed (as shown on this figure for single dry, multiple dry and extreme dry years).

(5) Though the City can sustainably extract up to 9,000 af/yr of groundwater, the City is planning to reduce its groundwater extraction in future years to increase the overall quality of its water supply. The City will continue to rely on groundwater for peaking and drought and emergency supplies, up to 9,000 af/yr, on an as-needed basis.

West Yost Associates
o:\c\404\02-08-74\wp\hollysugartabandfig
Last Revised: 05/03/09

City of Tracy
WSA for the Holly Sugar Sports Park

NOISE IMPACT ASSESSMENT

FOR

HOLLY SUGAR SPORTS PARK
TRACY, CA

JUNE 5, 2009

PREPARED FOR:

DE NOVO PLANNING GROUP
4630 BRAND WAY
SACRAMENTO, CA 95819

PREPARED BY:

AMBIENT
AIR QUALITY & NOISE CONSULTING

5314 SHELATO WAY
CARMICHAEL, CA 95608
TEL/FAX: 916.359.2700

TABLE OF CONTENTS

Introduction 1
Acoustic Fundamentals 1
Amplitude 1
Frequency 1
Addition of Decibels 1
Sound Propagation & Attenuation 3
Geometric Spreading 3
Atmospheric Effects 3
Shielding by Natural or Human-Made Features 3
Noise Descriptors 3
Human Response to Noise 5
Regulatory Framework 5
Noise 5
State of California 5
City of Tracy 6
City of Tracy Municipal Code 8
Groundborne Vibration 8
Affected Environment 9
Sensitive Land Uses 9
Ambient Noise Levels 10
Roadway Traffic Noise 10
Impact Analysis 12
Standards of Significance 12
Methodology 13
Impacts and Mitigation Measures 14
Cumulative Setting and Impacts 28
Cumulative Setting 28
Cumulative Impacts 29
References 31

LIST OF TABLES

Table 1 Common Acoustical Descriptors 4
Table 2 City of Tracy Land Use Compatibility Noise Standards 6
Table 3 Project Consistency with Applicable City of Tracy General Plan Noise Policies 7
Table 4 Noise Limits for District Zones 8
Table 5 Damage Potential to Buildings at Various Groundborne Vibration Levels 9
Table 6 Annoyance Potential to People at Various Groundborne Vibration Levels 9
Table 7 Ambient Daytime Noise Levels 10
Table 8 Existing Traffic Noise Levels 12
Table 9 Typical Construction Equipment Noise Levels 15
Table 10 Predicted Increases in Traffic Noise Levels Near-Term Conditions - Weekday 25
Table 11 Predicted Increases in Traffic Noise Levels Near-Term Conditions - Saturday 26
Table 12 Representative Vibration Source Levels for Construction Equipment 27
Table 13 Predicted Future Cumulative Traffic Noise Contours 27
Table 14 Predicted Increases in Traffic Noise Levels Cumulative Conditions - Weekday 29
Table 15 Predicted Increases in Traffic Noise Levels Cumulative Conditions - Saturday 30

LIST OF FIGURES

Figure 1 Common Noise Levels 2
Figure 2 Ambient Noise Environment 11

INTRODUCTION

This report describes the existing noise environment in the project vicinity and identifies potential noise impacts associated with the proposed project. Project impacts are evaluated relative to applicable noise level criteria and to the existing ambient noise environment. Mitigation measures have been identified for significant noise-related impacts.

ACOUSTIC FUNDAMENTALS

Noise is generally defined as sound that is loud, disagreeable, or unexpected. Sound is mechanical energy transmitted in the form of a wave because of a disturbance or vibration. Sound levels are described in terms of both amplitude and frequency.

AMPLITUDE

Amplitude is defined as the difference between ambient air pressure and the peak pressure of the sound wave. Amplitude is measured in decibels (dB) on a logarithmic scale. For example, a 65 dB source of sound, such as a truck, when joined by another 65 dB source results in a sound amplitude of 68 dB, not 130 dB (i.e., doubling the source strength increases the sound pressure by 3 dB). Amplitude is interpreted by the ear as corresponding to different degrees of loudness. Laboratory measurements correlate a 10 dB increase in amplitude with a perceived doubling of loudness and establish a 3 dB change in amplitude as the minimum audible difference perceptible to the average person.

FREQUENCY

The frequency of a sound is defined as the number of fluctuations of the pressure wave per second. The unit of frequency is the Hertz (Hz). One Hz equals one cycle per second. The human ear is not equally sensitive to sound of different frequencies. For instance, the human ear is more sensitive to sound in the higher portion of this range than in the lower and sound waves below 16 Hz or above 20,000 Hz cannot be heard at all. To approximate the sensitivity of the human ear to changes in frequency, environmental sound is usually measured in what is referred to as "A-weighted decibels" (dBA). On this scale, the normal range of human hearing extends from about 10 dBA to about 140 dBA. Common community noise sources and associated noise levels, in dBA, are depicted in Figure 1.

ADDITION OF DECIBELS

Because decibels are logarithmic units, sound levels cannot be added or subtracted through ordinary arithmetic. Under the decibel scale, a doubling of sound energy corresponds to a 3-dB increase. In other words, when two identical sources are each producing sound of the same loudness, the resulting sound level at a given distance would be 3 dB higher than one source under the same conditions. For example, if one automobile produces a sound level of 70 dB when it passes an observer, two cars passing simultaneously would not produce 140 dB; rather, they would combine to produce 73 dB. Under the decibel scale, three sources of equal loudness together would produce an increase of 5 dB.

Figure 1
Common Noise Levels

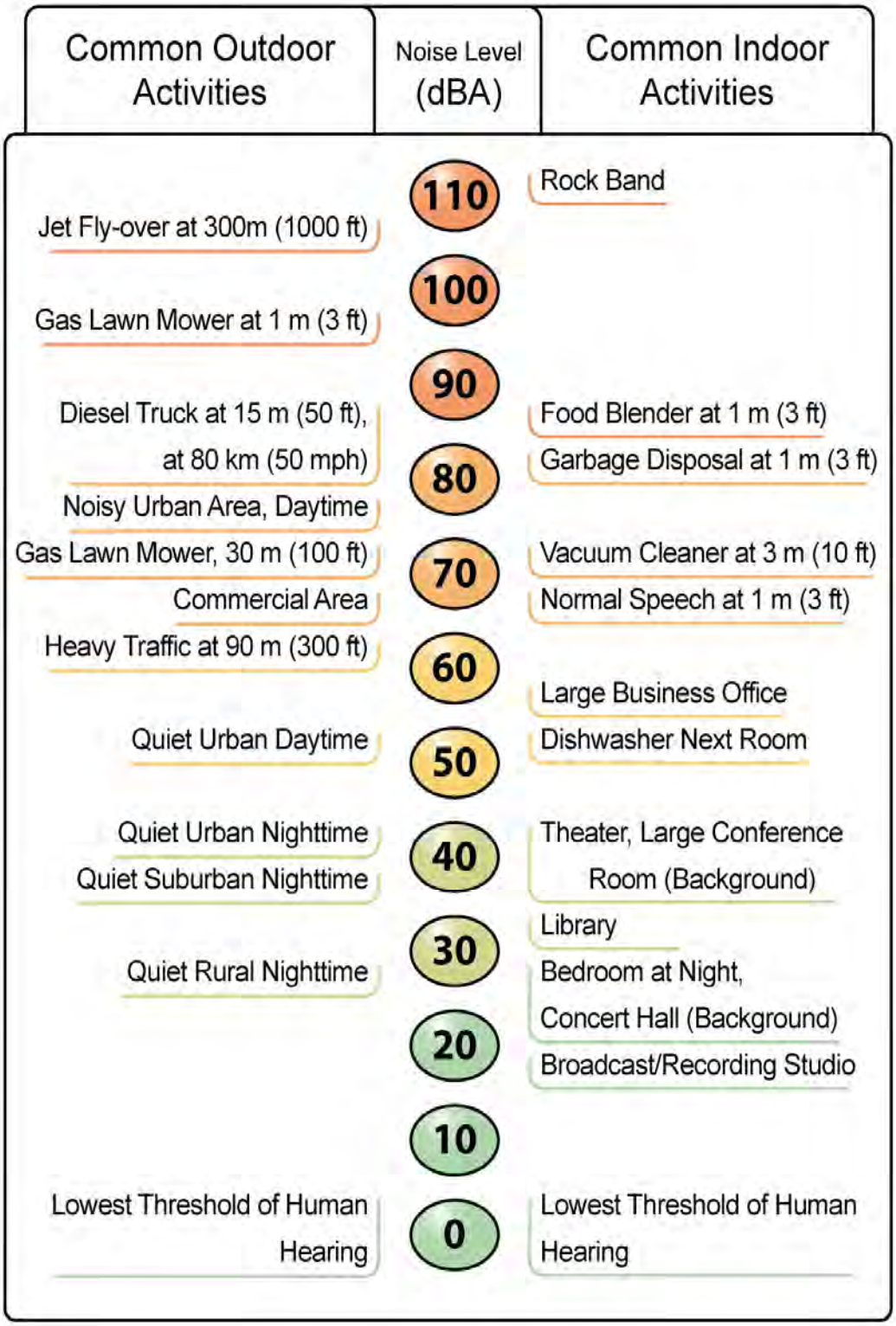

Source: Caltrans 2009

Sound Propagation & Attenuation

Geometric Spreading

Sound from a localized source (i.e., a point source) propagates uniformly outward in a spherical pattern. The sound level decreases (attenuates) at a rate of approximately 6 decibels for each doubling of distance from a point source. Highways consist of several localized noise sources on a defined path, and hence can be treated as a line source, which approximates the effect of several point sources. Noise from a line source propagates outward in a cylindrical pattern, often referred to as cylindrical spreading. Sound levels attenuate at a rate of approximately 3 decibels for each doubling of distance from a line source, depending on ground surface characteristics. For acoustically hard sites (i.e., sites with a reflective surface between the source and the receiver, such as a parking lot or body of water,), no excess ground attenuation is assumed. For acoustically absorptive or soft sites (i.e., those sites with an absorptive ground surface between a line source and the receiver, such as soft dirt, grass, or scattered bushes and trees), an excess ground-attenuation value of 1.5 decibels per doubling of distance is normally assumed. When added to the cylindrical spreading, the excess ground attenuation for soft surfaces results in an overall attenuation rate of 4.5 decibels per doubling of distance from a line source.

Atmospheric Effects

Receptors located downwind from a source can be exposed to increased noise levels relative to calm conditions, whereas locations upwind can have lowered noise levels. Sound levels can be increased at large distances (e.g., more than 500 feet) from the highway due to atmospheric temperature inversion (i.e., increasing temperature with elevation). Other factors such as air temperature, humidity, and turbulence can also have significant effects.

Shielding by Natural or Human-Made Features

A large object or barrier in the path between a noise source and a receiver can substantially attenuate noise levels at the receiver. The amount of attenuation provided by shielding depends on the size of the object and the frequency content of the noise source. Natural terrain features (e.g., hills and dense woods) and human-made features (e.g., buildings and walls) can substantially reduce noise levels. Walls are often constructed between a source and a receiver specifically to reduce noise. A barrier that breaks the line of sight between a source and a receiver will typically result in minimum 5 dB of noise reduction. Taller barriers provide increased noise reduction.

Noise Descriptors

The decibel scale alone does not adequately characterize how humans perceive noise. The dominant frequencies of a sound have a substantial effect on the human response to that sound. Although the intensity (energy per unit area) of the sound is a purely physical quantity, the loudness or human response is determined by the characteristics of the human ear.

Human hearing is limited in the range of audible frequencies as well as in the way it perceives the sound-pressure level in that range. In general, people are most sensitive to the frequency range of 1,000–8,000 Hz, and perceive sounds within that range better than sounds of the same amplitude in higher or lower frequencies. To approximate the response of the human ear, sound

levels of individual frequency bands are weighted, depending on the human sensitivity to those frequencies, which is referred to as the "A-weighted" sound level (expressed in units of dBA). The A-weighting network approximates the frequency response of the average young ear when listening to most ordinary sounds. When people make judgments of the relative loudness or annoyance of a sound, their judgments correlate well with the A-weighted noise scale. Other weighting networks have been devised to address high noise levels or other special problems (e.g., B-, C-, and D-scales), but these scales are rarely used in conjunction with environmental noise.

The intensity of environmental noise fluctuates over time, and several descriptors of time-averaged noise levels are typically used. For the evaluation of environmental noise, the most commonly used descriptors are L_{eq}, L_{dn}, CNEL and SEL. The energy-equivalent noise level, L_{eq}, is a measure of the average energy content (intensity) of noise over any given period. Many communities use 24-hour descriptors of noise levels to regulate noise. The day-night average noise level, L_{dn}, is the 24-hour average of the noise intensity, with a 10-dBA "penalty" added for nighttime noise (10 p.m. to 7 a.m.) to account for the greater sensitivity to noise during this period. CNEL, the community equivalent noise level, is similar to L_{dn} but adds an additional 5-dBA penalty for evening noise (7 p.m. to 10 p.m.) Another descriptor that is commonly discussed is the single-event noise exposure level, also referred to as the sound-exposure level, expressed as SEL. The SEL describes a receiver's cumulative noise exposure from a single noise event, which is defined as an acoustical event of short duration (0.5 second), such as a backup beeper, the sound of an airplane traveling overhead, or a train whistle. Common noise level descriptors are summarized in Table 1.

Table 1
Common Acoustical Descriptors

Descriptor	Definition
Energy Equivalent Noise Level (L_{eq})	The energy mean (average) noise level. The instantaneous noise levels during a specific period of time in dBA are converted to relative energy values. From the sum of the relative energy values, an average energy value (in dBA) is calculated.
Minimum Noise Level (L_{min})	The minimum instantaneous noise level during a specific period of time.
Maximum Noise Level (L_{max})	The maximum instantaneous noise level during a specific period of time.
Day-Night Average Noise Level (DNL or L_{dn})	The DNL was first recommended by the U.S. EPA in 1974 as a "simple, uniform and appropriate way" of measuring long term environmental noise. DNL takes into account both the frequency of occurrence and duration of all noise events during a 24-hour period with a 10 dBA "penalty" for noise events that occur between the more noise-sensitive hours of 10:00 p.m. and 7:00 a.m. In other words, 10 dBA is "added" to noise events that occur in the nighttime hours to account for increases sensitivity to noise during these hours.
Community Noise Equivalent Level (CNEL)	The CNEL is similar to the Ldn described above, but with an additional 5 dBA "penalty" added to noise events that occur between the hours of 7:00 p.m. to 10:00 p.m. The calculated CNEL is typically approximately 0.5 dBA higher than the calculated Ldn.
Single Event Level (SEL)	The level of sound accumulated over a given time interval or event. Technically, the sound exposure level is the level of the time-integrated mean square A-weighted sound for a stated time interval or event, with a reference time of one second.

HUMAN RESPONSE TO NOISE

The human response to environmental noise is subjective and varies considerably from individual to individual. Noise in the community has often been cited as a health problem, not in terms of actual physiological damage, such as hearing impairment, but in terms of inhibiting general well-being and contributing to undue stress and annoyance. The health effects of noise in the community arise from interference with human activities, including sleep, speech, recreation, and tasks that demand concentration or coordination. Hearing loss can occur at the highest noise intensity levels. When community noise interferes with human activities or contributes to stress, public annoyance with the noise source increases. The acceptability of noise and the threat to public well-being are the basis for land use planning policies preventing exposure to excessive community noise levels.

Unfortunately, there is no completely satisfactory way to measure the subjective effects of noise or of the corresponding reactions of annoyance and dissatisfaction. This is primarily because of the wide variation in individual thresholds of annoyance and habituation to noise over differing individual experiences with noise. Thus, an important way of determining a person's subjective reaction to a new noise is the comparison of it to the existing environment to which one has adapted: the so-called "ambient" environment. In general, the more a new noise exceeds the previously existing ambient noise level, the less acceptable the new noise will be judged. Regarding increases in A-weighted noise levels, knowledge of the following relationships will be helpful in understanding this analysis:

- Except in carefully controlled laboratory experiments, a change of 1 dB cannot be perceived by humans;
- Outside of the laboratory, a 3-dB change is considered a just-perceivable difference;
- A change in level of at least 5 dB is required before any noticeable change in community response would be expected. An increase of 5 dB is typically considered substantial;
- A 10-dB change is subjectively heard as an approximate doubling in loudness and would almost certainly cause an adverse change in community response.

REGULATORY FRAMEWORK

NOISE

STATE OF CALIFORNIA

California General Plan Guidelines

The State of California regulates vehicular and freeway noise affecting classrooms, sets standards for sound transmission and occupational noise control, and identifies noise insulation standards and airport noise/land-use compatibility criteria. The *State of California General Plan Guidelines* (State of California 1998), published by the Governor's Office of Planning and Research (OPR), also provides guidance for the acceptability of projects within specific CNEL contours. The guidelines also present adjustment factors that may be used in order to arrive at noise acceptability standards that reflect the noise control goals of the community, the

particular community's sensitivity to noise, and the community's assessment of the relative importance of noise pollution.

CITY OF TRACY

City of Tracy General Plan

The Noise Element of the City of Tracy General Plan contains policies designed to protect the community from the harmful and annoying effects of exposure to excessive noise. The City's General Plan identifies maximum allowable noise standards for determination of land use compatibility. Noise compatibility of proposed development is determined in comparison to these standards. The City's noise criteria for land use compatibility are summarized in Table 2. Applicable General Plan noise policies, as well as, the proposed project's compatibility with applicable noise policies, are summarized in Table 3 (City of Tracy 2003).

As depicted in Table 2, the City's "normally acceptable" exterior noise standard for outdoor recreational land uses is 65 dBA L_{dn}. Outdoor recreational land uses are considered "conditionally acceptable" between 65 and 80 dBA L_{dn} and "unacceptable" at levels in excess of 80 dBA L_{dn} (City of Tracy 2003).

Table 2
City of Tracy
Land Use Compatibility Noise Standards

Land Use Category	Exterior Noise Exposure (Ldn)		
	Normally Acceptable	Conditionally Acceptable	Unacceptable
Single-Family Residential	<60	60-75	>75
Multi-Family Residential, Motels, Hotels	<65[(a)]	65-75	>75
Schools, Libraries, Museums, Hospitals, Personal Care, Meeting Halls, Churches	<60	60-75	>75
Outdoor Sports and Recreation, Neighborhood Parks and Playgrounds	<65	65-80	>80
Office Buildings, Business Commercial and Professional	<70	70-80	>80
Auditoriums, Concert Halls, Amphitheaters		<75	>75

Normally Acceptable
Specified land use is satisfactory based upon the assumption that any buildings involved are of normal conventional construction, without any special insulation requirements.
Conditionally Acceptable
Specified land use may be permitted only after detailed analysis of the noise reduction requirements and needed noise insulation features included in the design.
Unacceptable
New construction or development should generally not be undertaken because mitigation is usually not feasible to comply with noise element policies.

Source: City of Tracy 2003

Table 3 Project Consistency with Applicable City of Tracy General Plan Noise Policies		
City of Tracy General Plan Policies	Consistency with General Plan	Analysis
Objective N-1.2: Control sources of excessive noise.		
P2. Mitigation measures shall be required for new development projects that exceed the following criteria: • Cause the Ldn at noise-sensitive uses to increase by 3 dB or more and exceed the "normally acceptable" level; • Cause the Ldn at noise-sensitive uses to increase 5 dB or more and remain "normally acceptable"; • Cause new noise levels to exceed the City of Tracy Noise Ordinance limits.	Consistent	Implementation of the proposed project would result in significant increases in ambient noise levels. Mitigation has been incorporated to reduce project-generated noise impacts. However, even with implementation of available mitigation measures, predicted noise levels at some nearby noise-sensitive land uses would still be anticipated to exceed applicable noise standards.
P4. All construction in the vicinity of noise-sensitive land uses, such as residences, hospitals, or convalescent homes, shall be limited to daylight hours or 7:00 AM to 7:00 PM. In addition, the following construction noise control measures shall be included as requirements at construction sites to minimize construction noise impacts. • Equip all internal combustion engine-driven equipment with intake and exhaust mufflers that are in good condition and appropriate for the equipment. • Locate stationary noise-generating equipment as far as possible from sensitive receptors when sensitive receptors adjoin or are near a construction area. • Utilize "quiet" air compressors and other stationary equipment where technology exists.	Consistent	Construction activities would result in a significant short-term impact to nearby noise-sensitive land uses. Mitigation measures have been incorporated to reduce temporary noise impacts.
P5. Site design techniques shall be considered as the primary means to minimize noise impacts as long as they do not conflict with the goals of the Community Character Element. Techniques include: • Designing landscaped building setbacks to serve as a buffer between the noise source and receptor. • Placing noise-tolerant land uses, such as parking lots, maintenance facilities, and utility areas between the noise source, such as highways and railroad tracks, and receptor. • Orienting buildings to shield noise sensitive outdoor spaces from a noise source. • Locating bedrooms or balconies on the sides of buildings facing away from noise sources. • Utilizing noise barriers (e.g., fencing, walls, or landscaped berms) to reduce adverse noise levels in noise-sensitive outdoor activity areas.	Consistent	Mitigation measures would be implemented, to the extent feasible and practical, to reduce project-related noise impacts. (Refer to consistency discussion for Objective N-1.2, P2, above.)
Source: City of Tracy 2003		

City of Tracy Municipal Code

The City's Noise Control Ordinance is contained in Title 4.12, Article 9, of the City's Municipal Code. Section 4.12.750 of the Noise Control Ordinance establishes noise limits for various land use districts, including residential, commercial, industrial, agricultural, and aggregate mineral overlay districts. The City's noise ordinance standards for land use districts are summarized in Table xx. The noise limits are based on hourly-average noise levels measured at the boundary of the property. The Noise Control Ordinance does not establish noise limits pertaining to recreational zone districts. However, Section 4.12.830, exempts "sounds emanating from a sporting, entertainment, or public event except that it shall be unlawful to exceed those sound level limits set fourth in Section 4.12.750 when measured at the property lines of any property which is used for residential purposes." As noted in Table 4, the city's noise standard for residential districts is 55 dBA L_{eq}. These standards do not apply to noise sources associated with minor maintenance (lawn mowers, power-brushes, leaf blowers, etc.) used for residential or nonresidential purposes provided said activities take place between the hours of 7:00 a.m. and 10:00 p.m. (City of Tracy 2009).

Table 4
Noise Limits for District Zones

Base District Zone	Hourly Average Noise Level (dBA L_{eq})
Residential Districts	55
Commercial Districts	65
Industrial Districts	75
Agricultural	75
Aggregate Mineral Overlay Zone	75

Noise levels are to be applied at the boundary of the property.
Source: City of Tracy 2009

GROUNDBORNE VIBRATION

There are no federal, state, or local regulatory standards for ground-borne vibration. However, various criteria have been established to assist in the evaluation of vibration impacts. For instance, the California Department of Transportation (Caltrans) has developed vibration criteria based on potential structural damage risks and human annoyance. Caltrans-recommended criteria for the evaluation of groundborne vibration levels, with regard to structural damage and human annoyance, are summarized in Table 5 and Table 6, respectively. The criteria differentiate between transient and continuous/frequent sources. Transient sources of ground-borne vibration include intermittent events, such as blasting; whereas, continuous and frequent events would include the operations of equipment, including construction equipment, and vehicle traffic on roadways (Caltrans 2002, 2004).

The ground-borne vibration criteria recommended by Caltrans for evaluation of potential structural damage is based on building classifications, which take into account the age and condition of the building. For residential structures and newer buildings, Caltrans considers a minimum peak-particle velocity (ppv) threshold of 0.25 inches per second (in/sec) for transient sources and 0.04 in/sec for continuous/frequent sources to be sufficient to protect against building damage. Continuous ground-borne vibration levels below approximately 0.02 in/sec ppv are unlikely to cause damage to any structure. In terms of human annoyance, continuous vibrations in excess of 0.04 in/sec ppv and transient sources in excess of 0.25 in/sec ppv are

identified by Caltrans as the minimum perceptible level for ground vibration. Short periods of ground vibration in excess of 2.0 in/sec ppv can be expected to result in severe annoyance to people. Short periods of ground vibration in excess of 0.1 in/sec ppv (0.2 in/sec ppv within buildings) can be expected to result in increased levels of annoyance (Caltrans 2002, 2004).

Table 5
Damage Potential to Buildings at Various Groundborne Vibration Levels

Structure and Condition	Vibration Level (in/sec ppv)	
	Transient Sources	Continuous/Frequent Intermittent Sources
Extremely Fragile Historic Buildings, Ruins, Ancient Monuments	0.12	0.08
Fragile Buildings	0.2	0.1
Historic and Some Old Buildings	0.5	0.25
Older Residential Structures	0.5	0.3
New Residential Structures	1.0	0.5
Modern Industrial/Commercial Buildings	2.0	0.5

Note: Transient sources create a single isolated vibration event, such as blasting or drop balls. Continuous/frequent intermittent sources include impact pile drivers, pogo-stick compactors, crack-and-seat equipment, vibratory pile drivers, and vibratory compaction equipment.
Source: Caltrans 2002, 2004

Table 6
Annoyance Potential to People at Various Groundborne Vibration Levels

Human Response	Vibration Level (in/sec ppv)	
	Transient Sources	Continuous/Frequent Intermittent Sources
Barely Perceptible	0.04	0.01
Distinctly Perceptible	0.25	0.04
Strongly Perceptible	0.9	0.10
Severe	2.0	0.4

Note: Transient sources create a single isolated vibration event, such as blasting or drop balls. Continuous/frequent intermittent sources include impact pile drivers, pogo-stick compactors, crack-and-seat equipment, vibratory pile drivers, and vibratory compaction equipment.
Source: Caltrans 2002, 2004

AFFECTED ENVIRONMENT

SENSITIVE LAND USES

Noise-sensitive land uses generally include those uses where exposure to noise would result in adverse effects, as well as, uses where quiet is an essential element of their intended purpose. Residential dwellings are of primary concern because of the potential for increased and prolonged exposure of individuals to both interior and exterior noise levels. Other noise-sensitive land uses include hospitals, convalescent facilities, parks, hotels, places of worship, libraries, and other uses where low interior noise levels are essential.

Noise-sensitive land uses located near the project site consist predominantly of residential land uses. The nearest existing residential uses are located west of the project site, across Corral Hollow Road and south of the project site along Larch Road and N. Tracy Boulevard. In addition to residential land uses, various places of worship are also located south of the project site along Larch Road.

AMBIENT NOISE LEVELS

To document the existing noise environment, ambient noise surveys were conducted by AMBIENT Air Quality & Noise Consulting at various locations in the project area. Short-term (10-minute) noise measurements were conducted on March 16, 2009 using a Larson Davis model 820 sound-level meter placed at a height of approximately 5 feet above the ground surface. Based on the measurements conducted, ambient noise levels are predominantly influenced by vehicle traffic on area roadways. Measured average daytime noise levels (in dBA L_{eq}) in the project area generally range from the low 50's to mid 60's, dependent primarily on distance from area roadways. Average nighttime noise levels are typically approximately 5 to 10 dBA less than daytime noise levels. Intermittent noise levels in the project area associated with vehicle traffic on area roadways and can reach levels of approximately 80 dBA L_{max} along area roadway corridors. Measurement survey results are summarized in Table 7 and depicted in Figure 2.

Table 7
Ambient Daytime Noise Levels

	Monitoring Location	Monitoring Period	Noise Level (dBA)	
			L_{eq}	L_{max}
1	Tracy Boulevard at Sugar Road, Eastern Project Site Boundary 50 feet from near travel-lane centerline.	09:20-09:30	64.4	80.4
2	Larch Clover Community Park, Southern Project Site Boundary	09:55-10:05	51.9	56.1
3	Corral Hollow Road, Western Project Site Boundary. 50 feet from near travel-lane centerline.	10:30-10:40	60.6	78.2

Noise measurements were conducted on March 16, 2009 using a Larson Davis Laboratories Model 820 Type I integrating sound meter positioned at a height of approximately 5 feet above ground surface.

ROADWAY TRAFFIC NOISE

The dominant noise source in the project area is vehicular traffic on area roadways. Table 8 summarizes the existing traffic noise levels (in dBA CNEL/L_{dn}) for existing roadways located in the project area. Existing roadway traffic noise levels were calculated for weekday and Saturday operational conditions using the Federal Highway Administration (FHWA) roadway noise prediction model (FHWA-RD-77-108) based on California vehicle reference noise levels and traffic data obtained from the traffic analysis prepared for this project. Additional input data included day/night percentages of autos, medium and heavy trucks, vehicle speeds, ground attenuation factors, and roadway widths. As depicted in Table 8, predicted weekday noise levels (in dBA CNEL/L_{dn}) at approximately 50 feet from area roadways range from the mid to upper 60's. Existing traffic noise levels on Saturdays are slightly lower, approximately 1-3 dBA less, than weekday noise levels.

Figure 2
Ambient Noise Environment

Active Sports Park Site
Passive Recreation Area
Future Expansion Area
City of Tracy
Sphere of Influence

1 Noise Monitoring Locations

Leq Average-Hourly Equivalent Noise Level
Lmax Maximum Intermittent Noise Level

N W E S

0 250 500 1,000 1,500 2,000 Feet

Image Source: De Novo Planning Group, 2008

Table 8 Existing Traffic Noise Levels		
Roadway Segment	Predicted Noise Level (dBA CNEL/L_{dn}) 50 ft from Centerline of Near Travel Lane	
	Weekday	Saturdays
Corral Hollow Road, North of Larch Road	58.0	56.6
Corral Hollow Road, South of Larch Road	58.2	57.2
Larch Road, West of Corral Hollow Road	56.0	53.5
Larch Road, East of Corral Hollow Road	55.2	54.5
N. Tracy Boulevard, North of Larch Road	59.9	59.2
N. Tracy Boulevard, South of Larch Road	60.6	59.7
Larch Road, West of N. Tracy Boulevard	55.3	54.8
Larch Road, East of N. Tracy Boulevard	57.0	54.9
Traffic noise levels were predicted using the FHWA roadway noise prediction model based on traffic information obtained from the traffic analysis prepared for this project. Modeled traffic noise levels assume no natural or man-made shielding (e.g., vegetation, berms, walls, buildings).		

IMPACT ANALYSIS

STANDARDS OF SIGNIFICANCE

Criteria for determining the significance of noise impacts were developed based on information contained in the California Environmental Quality Act Guidelines (CEQA Guidelines, Appendix G). According to those guidelines, a project may have a significant effect on the environment if it would result in the following conditions:

a) Exposure of persons to or generation of noise levels in excess of standards established in the local general plan or noise ordinance or of applicable standards of other agencies.

b) Exposure of persons to or generation of excessive groundborne vibration or groundborne noise levels.

c) A substantial permanent increase in ambient noise levels in the project vicinity above levels existing without the project.

d) A substantial temporary or periodic increase in ambient noise levels in the project vicinity above levels existing without the project.

e) For a project located within an airport land use plan area or, where such a plan has not been adopted, within two miles of a public airport or a public use airport, would the project expose people residing or working in the project area to excessive noise levels.

f) For a project within the vicinity of a private airstrip, would the project expose people residing or working in the project area to excessive noise levels.

The nearest airport/airstrip is the Tracy Municipal Airport, which is located approximately 4 miles south of the project site. Implementation of the proposed project would not affect airport operations, nor would implementation of the proposed project result in the development or relocation of any noise-sensitive land uses within two miles of any airport or airstrip. As a result, implementation of the proposed project would not result in increased exposure of individuals to excessive aircraft noise levels associated with the existing airport. There are no existing private airstrips within two miles of the project area. For these reasons, noise impacts associated with existing airports and airstrips were identified as being less than significant or having no impact and will not be further discussed in this report.

Temporary noise impacts associated with the proposed project would be associated with short-term construction-related activities. Long-term permanent increases in noise levels would occur associated with onsite operational activities, as well as, potential increases in traffic noise levels along area roadways. Potential increases in groundborne vibration levels would be primarily associated with short-term construction-related activities. For purposes of this analysis and where applicable, the City of Tracy noise standards were used for evaluation of project-related noise impacts.

- Short-term Exposure to Project-Generated Noise — Construction noise impacts would be considered significant if activities were to occur during the more noise-sensitive nighttime hours, in violation of the City's General Plan requirements. The City's General Plan Noise Element, Objective N-1.2, Policy 4 restricts nuisance-related noise-generating construction activities to between the hours of 7:00 a.m. and 7:00 p.m.

- Long-term Exposure to Project-Generated Noise — Long-term operational noise impacts would be considered significant if the proposed project would result in a significant increase in ambient noise levels that would exceed applicable City noise standards (Tables 2 and 4) at nearby noise-sensitive land uses. As depicted in Table 5, the City's noise standard for residential land uses is 55 dBA Leq. The City's municipal code does not specify noise standards applicable to places of worship or libraries. To ensure a conservative analysis, the City's minimum noise standard of 55 dBA Leq was also relied upon for the evaluation of potential noise impacts to existing nearby places of worship; as well as, the proposed library. In accordance with the City General Plan Noise Policy N-1.2, P2, significant increases in ambient noise levels would be defined as an increase of 3 dBA at levels in excess of 60 dBA CNEL, and an increase of 5 dBA at levels below 60 dBA CNEL (Table 3).

- Exposure to Groundborne Vibration — Groundborne vibration levels would be considered significant if predicted short-term construction or long-term operational groundborne vibration levels attributable to the proposed project would exceed recommended criteria (Tables 5 and 6) at nearby existing structures.

METHODOLOGY

Short-term construction-generated noise and groundborne vibration impacts were evaluated based on levels commonly associated with construction individual construction equipment and construction-related activities. Predicted noise levels at nearby noise-sensitive land uses were calculated based on distance from the source and assuming an average noise attenuation rate of 6 dB per doubling of distance from the source.

A combination of existing literature, noise level measurements, and application of accepted noise prediction and sound propagation algorithms were used for the prediction of long-term stationary and transportation source noise levels. Predicted noise levels at nearby noise-sensitive

land uses were calculated based on distance from the source and assuming an average noise attenuation rate of 6 dB per doubling of distance from the source. Traffic noise levels were calculated using the Federal Highway Administration (FHWA) roadway noise prediction model (FHWA-RD-77-108) based on California vehicle reference noise levels and traffic data obtained from the traffic analysis prepared for this project. Additional input data included day/night percentages of autos, medium and heavy trucks, vehicle speeds, ground attenuation factors, and roadway widths. Predicted noise levels were calculated at a distance of 50 feet from the near-travel-lane centerline, as well as distances to the predicted 60 and 65 dBA CNEL noise contours. Increases in traffic noise levels attributable to the proposed project were determined based on a comparison of predicted noise levels, with and without project implementation. The compatibility of proposed land uses were evaluated based on a comparison of projected future onsite noise levels with the City's corresponding land use compatibility noise criteria (Table 2).

IMPACTS AND MITIGATION MEASURES

Exposure to Short-term Construction Noise

Impact 1 *Short-term construction-generated noise levels associated with the proposed project could result in a substantial temporary increase in ambient noise levels at nearby noise-sensitive land uses. Short-term increases in ambient noise levels may result in increased levels of annoyance and activity interference at nearby noise-sensitive land uses. This impact is considered potentially significant.*

The proposed project consists of the construction and operation of an approximately 298-acre park, which would include an approximately 166-acre active sports park facility, approximately 86 acres of land south of the active sports park for passive recreational uses and an approximately 46-acre area to the northwest of the active sports park site as a future expansion area. A detailed phasing plan for the proposed park has not yet been developed. However, for the purposes of this Environmental Impact Report, it is assumed that the entire 166-acre active sports park site and the 86-acre passive recreation area would be developed within 5-10 years, and that the future expansion area will be developed within 25 years.

Construction noise in any one particular area would be temporary and would include noise from activities such as excavations, site preparation, truck hauling of material, pouring of concrete, and use of power hand tools. Construction noise typically occurs intermittently and varies depending on the nature of the construction activities being performed. Noise generated by construction equipment, including excavation equipment, material handlers, and portable generators, can reach high levels for brief periods. The U.S. EPA has found that the average noise levels associated with construction activities typically range from approximately 76 dBA to 84 dBA L_{eq}, with intermittent individual equipment noise levels ranging from approximately 74 dBA to more than 88 dBA for brief periods (U.S. EPA 1971.) Table 9 lists typical uncontrolled noise levels generated by individual pieces of representative construction equipment likely to be used during construction.

Noise from localized point sources, such as construction sites, typically decreases by approximately 6 dBA with each doubling of distance from source to receptor. Given this noise attenuation rate and based on the noise levels presented in Table 9, predicted noise levels at the nearest residential land uses could reach levels of up to approximately 84 dBA L_{eq}, when construction activities occur near the western and southern boundaries of the project site.

Table 9 Typical Construction Equipment Noise Levels	
Equipment	Typical Noise Level (dBA Lmax) 50 feet from Source
Air Compressor	81
Backhoe	80
Compactor	82
Dozer/Grader/Front-End Loader	85
Concrete Mixer	85
Concrete Pump	82
Crane, Mobile	83
Generator	81
Jack Hammer	88
Paver	89
Roller	74
Saw	76
Sources: FTA 2006	

With regard to residential land uses, noise levels associated with construction activities occurring during the more noise-sensitive nighttime hours (i.e., 10 p.m. to 7 a.m.) are of increased concern. Because exterior ambient noise levels typically decrease during the nighttime hours as community activities (e.g., commercial activities, vehicle traffic) decrease, construction activities performed during these more noise-sensitive periods of the day can result in increased annoyance and potential sleep disruption for occupants of nearby residential dwellings. The proposed project does not include restrictions on the hours during which construction activities would occur. As a result, construction activities occurring during the more noise-sensitive nighttime hours could result in increased levels of annoyance and potential sleep disruption for occupants of nearby residential land uses. For this reason, short-term noise-generating construction activities associated with the proposed project would be considered to have a potentially significant impact.

Mitigation Measure 1

The following mitigation measures shall be implemented:

a. Construction activities (excluding activities that would result in a safety concern to the public or construction workers) shall be limited to between the hours of 7:00 a.m. and 7:00 p.m. Construction activities shall be prohibited on Sundays and federal holidays.

b. Construction equipment shall be properly maintained and equipped with noise-reduction intake and exhaust mufflers and engine shrouds, in accordance with manufacturers' recommendations.

c. Construction equipment staging areas shall be located at the furthest distance possible from nearby noise-sensitive land uses.

Timing/Implementation: *During construction.*

Enforcement/Monitoring: *City of Tracy.*

Significance After Mitigation

Implementation of the above mitigation measures would limit construction activities to the less noise-sensitive periods of the day. Use of mufflers would reduce individual equipment noise levels by approximately 10 dBA. With implementation of the above mitigation measures, noise-generating construction activities would comply with the City's Municipal Code and General Plan requirements and would be considered less than significant.

Exposure to Non-Transportation Sources of Noise

Impact 2 *Noise associated with the proposed onsite recreational uses would exceed applicable noise standards at nearby residential land uses and, therefore, would be considered potentially significant.*

As noted earlier in this report, the proposed project consists of the construction and operation of an approximately 298-acre park, which would include an approximately 166-acre active sports park facility, approximately 86 acres of land south of the active sports park for passive recreational uses and an approximately 46-acre area to the northwest of the active sports park site as a future expansion area.

Noise generated by onsite uses would be largely associated with the use of recreational facilities, as well as, noise generated by vehicles within parking areas and landscape maintenance activities. Although the specific hours of operation for proposed recreational facilities have not yet been identified, it is anticipated that recreational facilities would be used primarily during the daytime hours; though some recreational activities, including use of the proposed stadium, could extend into the evening hours. The more noise-intensive recreational uses would be located within the Active Sports Park, as well as, within the proposed future expansion area. The Passive Recreation Area would serve as a buffer between the more developed active park uses and noise-sensitive land uses located south of the park site. Noise levels associated with proposed Active Sports Park, Future Expansion Area, and Passive Recreation Area and resultant impacts to nearby noise-sensitive land uses are discussed in more detail, as follows:

Active Sports Park

The 166-acre active sports park may ultimately include up to 14 soccer fields, 18 baseball fields, five softball fields, four football fields, and one football/soccer stadium. In addition, the project would include up to four children's play areas, restroom facilities, concession facilities, bleachers, and parking areas. Noise generated by recreational uses located within the proposed Active Sports Park would be primarily associated with the use of onsite recreational facilities (i.e., stadium, ball fields, and play areas), vehicle parking areas, and landscape maintenance

activities. Noise levels and impacts associated with these primary noise sources are discussed in more detail, as follows:

Stadium

The proposed stadium would have an estimated capacity of approximately 3,500 seats and would be located near the western boundary of the project site, adjacent to Corral Hollow Road. The nearest existing noise-sensitive receptors include residential dwellings located adjacent to and west of Corral Hollow Road, approximately 145 feet from the proposed stadium. Residential land uses and various places of worship are located south of the project site, along Larch Road, the nearest of which are located approximately 975 south of the proposed stadium along the southern boundary of the proposed Passive Recreation Area. It is also important to note that the proposed Future Expansion Area could include a proposed library, which would also be considered a noise-sensitive receptor.

Predicted noise levels at stadiums are dependent on various factors including stadium design and orientation, the activities conducted, spectator crowd size, type of public address (PA) amplification system installed, as well as speaker placement. The design of the proposed stadium has not yet been completed. However, events associated with stadiums, particularly events involving large spectator crowds and the use of amplified sound systems, such as competitive football games and pregame/half-time shows, can result in substantial increases in ambient noise levels. Based on measurements conducted at stadiums of similar size, events that include the use of an amplified sound system can generate noise levels of approximately 54 to 76 dBA L_{eq} at 500 feet (IUSD 2008). Based on these noise levels, the predicted 55 dBA L_{eq} noise contour for the proposed stadium would extend to distances ranging from approximately 475 to 3,300 feet. Actual noise levels would be dependent on various factors, including the specific activities conducted and final stadium design.

Based on the noise levels discussed above, predicted noise levels at the nearest existing residential dwellings located adjacent to and west of Corral Hollow Road, approximately 145 feet from the proposed stadium, would range from approximately 65 to 87 dBA L_{eq}. Predicted noise levels at existing noise-sensitive land uses located along the southern boundary of the proposed passive use recreational area, approximately 975 feet south of the proposed stadium, would range from approximately 48 to 70 dBA L_{eq}. Depending on final site design and assuming that the proposed library were to be located near the southern boundary of the proposed expansion area, predicted noise levels at the proposed future library could reach levels of up to 75 dBA L_{eq}. Predicted noise levels at nearby noise-sensitive receptors could potentially exceed the City's noise standard of 55 dBA L_{eq}.

Play Areas, Hard Courts and Ball Fields

Noise sources generally associated with play areas, hard courts, and ball fields typically include the sound of voices, play-area activities (e.g., impulsive sound caused by contact between basketballs and hard-surface courts). Noise levels associated with such events can vary widely depending on various factors, including the type and number of outdoor events being conducted, whether a public address system is used, and the number of spectators in attendance. In general, noise from PA systems at recreational events tends to dominate the noise environment and occurs on a more frequent basis then noise generated by spectators. Noise associated with smaller

recreational events that do not involve spectator crowds, such as the use of hard courts, disc golf, and children's play areas, typically generate noise levels of less than 55 dBA L_{eq} at 50 feet. Noise levels at ball fields that involve spectator crowds, such as competitive baseball, softball, and soccer events, generally range from approximately 60 to 65 dBA L_{eq} at 50 feet from the spectator area, without the use of a PA system. Ball fields involving the use of a PA system, such as baseball and softball games, generate higher noise levels. Noise levels associated with spectator crowds and PA systems are highly directional and can vary from approximately 80 to 95 dBA L_{eq} at 50 feet from the spectator stands.

The nearest offsite noise-sensitive receptors in relation to the proposed onsite ball fields and play areas consist of residential land uses and places of worship located along the southern boundary of the proposed Passive Recreational Area at distances ranging from approximately 375 feet to 800 feet from the nearest onsite ball fields. Based on the noise levels discussed above, onsite hard courts, disc golf facilities, and general recreational use areas that do not involve large spectator crowds would not be anticipated to result in a significant increase in ambient noise levels or exceed 55 dBA L_{eq} at offsite receptors. Assuming a maximum noise level of 65 dBA L_{eq} without the use of a PA system, the predicted 55 dBA L_{eq} noise contour for onsite ball fields, such as the proposed soccer fields, would extend to approximately 165 feet from the spectator area. Assuming that multiple soccer events were to occur simultaneously, resultant noise levels at the nearest noise-sensitive land uses would not exceed the City's noise standard of 55 dBA Leq. With the use of a PA system, the predicted 55 dBA L_{eq} noise contours for onsite ball fields would range from distances of approximately 820 to 2,800 feet from the spectator area. Depending on the directional aspects of the field, spectator crowd size, and the number of events occurring simultaneously, predicted noise levels at the nearest noise-sensitive land uses would range from approximately 56 to 71 dBA L_{eq}.

During typical daily usage, excluding organized competitive events, noise levels at nearby existing noise-sensitive land uses would be largely masked by vehicle traffic on area roadways. Noise generated by proposed onsite uses that do not typically involve large spectator crowds and the use of PA systems, such as hard courts, play areas, and soccer fields would not exceed the City's noise standard of 55 dBA L_{eq} at nearby noise-sensitive land uses. However, competitive events involving PA systems, such as baseball and softball events, would exceed the City's noise standard of 55 dBA L_{eq}. Depending on final site design, predicted noise levels at the proposed library could also exceed 55 dBA L_{eq}.

Parking Lots

Based on the traffic analysis prepared for this project, the Saturday peak-hour for the soccer season is expected to generate the largest number of trips. The Saturday peak-hour parking demand during the soccer season would be 448 parking spaces. In accordance with City Code requirements, the proposed stadium would be required to provide a total of 700 parking spaces, which would be distributed to the south and east of the proposed stadium. The total peak hour parking demand for the active sports area would be 1,148 spaces (Fehr & Peers 2009).

Noise levels commonly associated with vehicle parking areas are often associated with the starting of vehicles, the opening and closing of vehicle doors, playing of amplified music, and the occasional sound of vehicle alarms and horns. Noise levels associated with parking lots can reach intermittent levels of approximately 92 dBA SEL at 50 feet

(FTA 2006.) Predicted noise levels at nearby receptors associated with proposed parking lots were calculated based on the Saturday peak-hour parking demand, as discussed above. To ensure a conservative analysis, it was assumed that onsite activities would utilize parking spaces located within the western portion of the project site, nearest the existing noise-sensitive receptors and the proposed library.

Based on the modeling conducted, predicted peak-hour noise levels associated with proposed onsite parking areas would be approximately 40 dBA L_{eq} at the nearest residential uses located west of the projects site and approximately 29 dBA L_{eq} at the nearest land uses located to the south, along the southern boundary of the proposed Passive Recreation Area. Predicted peak-hour noise levels at the proposed library, assuming the library were to be located near the northern boundary of the Active Recreation Area, would be approximately 46 dBA L_{eq}. Predicted parking-related noise levels at offsite locations would be largely masked by existing ambient noise levels, would not result in an increase in ambient noise levels, and would not exceed the City's applicable noise standard of 55 dBA L_{eq}.

Landscape Maintenance

Landscape maintenance activities often result in sporatic and intermittent increases in ambient noise levels. Equipment used for landscape maintenance often includes the use of power mowers and leaf blowers. Landscape maintenance equipment, such as leaf blowers and gasoline-powered lawn mowers, can result in noise levels of up to approximately 100 dBA at 3 feet (EPA 1971). Based on this noise levels and assuming landscape maintenance activities were to occur near the project site boundaries, predicted noise levels at nearby noise-sensitive land uses could reach levels of up to approximately 75 dBA L_{eq}. Because landscape maintenance activities typically occur over a large area, noise levels at any given receptor would not be sustained for extended periods of time (i.e., periods greater than approximately one hour). Landscape maintenance activities occurring between the daytime hours of 7:00 a.m. and 10:00 p.m. are exempt from the City's municipal code noise standards (City of Tracy 2009). However, landscape maintenance activities occurring during the more noise-sensitive nighttime hours (i.e., 10:00 p.m. to 7:00 a.m.) could result in increased levels of annoyance and potential sleep disruption to occupants of nearby residential dwellings.

Future Expansion Area

The 46-acre future expansion area is located northwest of the 166-acre active sports park. A specific site plan for this area has not been developed; however, the City is currently contemplating several amenities and features that may be suitable for future development within the future expansion area. For purposes of this analysis, it is assumed that the following uses may be developed within the future expansion area.

- Skate park and/or BMX park (up to 11,000 square feet maximum)
- Paintball course (2.5 acres)
- Shuffle Board and/or Bocce ball courts (4 total courts)
- Hard courts (basketball) and/or additional athletic fields (up to 23,000 square feet maximum)
- Recreation Center (including gymnasium, meeting rooms, community rooms and multipurpose rooms- totaling up to 45,000 square feet maximum)
- Library (up to 25,000 square feet maximum)
- "Spray Park" (children's park with small water features, sprinklers, etc.)

- Class 1 Bike Path

Noise generated by recreational uses located within the proposed Future Expansion Area would be primarily associated with the use of onsite recreational facilities, including the skate park, BMX track, and paintball course, as well as additional hard courts and ball fields. As with the Active Recreation Area, noise would also be generated by onsite vehicle parking areas and landscape maintenance activities, as well as building mechanical equipment associated with the proposed onsite structures (i.e., library and recreation center). Noise levels and impacts associated with these primary noise sources are discussed in more detail, as follows:

Skate park

Noise associated with skate parks is most commonly associated with children's voices and sounds generated by skateboard wheel travel on park surfaces. Skateboards also produce intermittent noise associated with the 'popping' of the board tails, and the 'grinding' of the aluminum trucks (the skateboard axle) on the steel rails. Based on measurements conducted at similar facilities, noise levels during non-competitive events average approximately 55 to 60 dBA L_{eq} at approximately 50 feet from the park, with an average of approximately 15 to 20 skaters utilizing the park (AMBIENT 2009). During competitive organized events, higher noise levels could potentially occur due to the increased number of skaters, as well as, noise generated by event announcers and spectators. Noise levels associated with organized skating events, with a total of 40 to 60 skaters, have measured up to approximately 71 dBA L_{eq} at 50 feet (Van Orden 2006).

Based on the noise levels discussed above, the predicted 55 dBA L_{eq} noise contour for typical daily use of the skate park would extend to approximately 94 feet from the park. In the event that competitive organized events were to occur at the skate park, the predicted 55 dBA L_{eq} noise contour would extend to approximately 295 feet from the skate park/spectator area. Assuming that the proposed skate park would be located near the western boundary of the proposed expansion area, nearest the existing residential land uses, predicted noise levels at the nearest existing residential land uses would be approximately 58 and 69 dBA L_{eq}, for non-competitive and organized competitive events, respectively. During typical daily usage, excluding organized competitive events, noise levels at nearby existing residential land uses would be largely masked by vehicle traffic on Corral Hollow Road. Nonetheless, predicted noise levels would exceed the City's noise standard of 55 dBA L_{eq}, particularly in the event that larger organized events were to occur at this facility. Depending on final site design, predicted noise levels at the proposed library could also exceed 55 dBA L_{eq}.

BMX Track

Noise associated with BMX tracks consists predominantly of voices of BMX participants and spectators and, to a lesser extent, bicycle travel on unpaved track surfaces. Based on measurements conducted at the Cummings Family Skate and Bike Park in Folsom, CA, noise levels at the BMX track measured less than 55 dBA L_{eq} at the park edge, with approximately 10 cyclists utilizing the course. During competitive organized events, higher noise levels could potentially occur due to the increased number of cyclists, as well as, noise generated by event announcers and spectators. Noise levels associated with organized BMX events would be similar to levels generated by organized skating events, as discussed above, resulting in noise levels of up to approximately 71 dBA L_{eq} at 50 feet.

Based on the noise levels discussed above, the predicted 55 dBA L_{eq} noise contour for typical daily use of the BMX track would extend to approximately 50 feet from the track. In the event that competitive organized events were to occur at the track, the predicted 55 dBA L_{eq} noise contour would extend to approximately 295 feet from the track/spectator area. Assuming that the proposed BMX track would be located near the western boundary of the proposed expansion area, nearest the existing residential land uses, predicted noise levels at the nearest existing residential land uses would be approximately 53 and 69 dBA L_{eq}, for non-organized and organized events, respectively. During typical daily usage, excluding organized competitive events, noise levels at nearby existing residential land uses would be largely masked by vehicle traffic on Corral Hollow Road and would not exceed the City's noise standard of 55 dBA L_{eq}. However, in the event that organized competitive events were to be held at the track, predicted noise levels at the nearest existing residential land use could potentially exceed the City's noise standard and result in a significant increase in ambient noise levels.

Paintball Course

Noise levels associated with paintball courses are typically associated with the intermittent yelling of participants and firing of paintball guns. Based on measurements conducted at similar facilities, average-hourly noise levels ranged from approximately 64 to 70 dBA L_{eq} at approximately 50 feet from the course. Based on this noise level, the predicted 55 dBA L_{eq} noise contour for the proposed paintball course would extend up to approximately 295 feet from the course. Assuming that the proposed paintball course would be located near the western boundary of the proposed Future Expansion Area, predicted noise levels at the nearest existing residential land uses could reach levels of approximately 68 dBA L_{eq}. Predicted noise levels at the nearest existing residential land use could potentially exceed the City's noise standard and result in a significant increase in ambient noise levels.

Play Areas, Hard Courts and Ball Fields

The nearest offsite noise-sensitive receptors consist of residential land uses located approximately west of the site, across Corral Hollow Road. As with the proposed Active Sports Area, onsite hard courts and general recreational use areas that do not involve large spectator crowds, including children's play areas, shuffle board and bocce ball courts, would not be anticipated to result in a significant increase in ambient noise levels or exceed 55 dBA Leq at the nearest offsite receptors.

Assuming that proposed ball fields were to be located near the western boundary of the site and assuming a noise level of 65 dBA L_{eq} without the use of a PA system, noise levels at the nearest residence would be approximately 63 dBA L_{eq}. In the event that proposed ball fields were to be equipped with PA systems and depending on the directional aspects of the fields, predicted noise levels at the nearest residence would range from approximately 78 to 83 dBA L_{eq}. Depending on final site design, predicted noise levels at the nearest residence, as well as at the proposed onsite library, could exceed 55 dBA L_{eq}. During normally daily use, resultant noise levels at the nearest residential dwellings would be largely masked by ambient traffic noise levels. However events involving the use of PA systems could result in a significant increase in ambient noise levels that could exceed the City's noise standard of 55 dBA L_{eq}.

Parking Lots

Noise levels commonly associated with vehicle parking areas are often associated with the starting of vehicles, the opening and closing of vehicle doors, playing of amplified music, and the occasional sound of vehicle alarms and horns. Noise levels associated with parking lots can reach intermittent levels of approximately 92 dBA SEL at 50 feet (FTA 2006.) As noted earlier in this section, predicted peak-hour noise levels associated with proposed onsite parking areas would be approximately 40 dBA L_{eq} at the nearest residential uses located west of the project site and would not exceed the City's applicable noise standard of 55 dBA L_{eq}. Resultant noise levels associated with onsite parking areas would be intermittent and would be largely masked by vehicle traffic on Corral Hollow Road.

Landscape Maintenance

As discussed earlier in this report, landscape maintenance activities often result in sporatic and intermittent increases in ambient noise levels. Equipment used for landscape maintenance often include the use of power mowers and leaf blowers, which can result in noise levels of up to approximately 100 dBA at 3 feet (EPA 1971). Depending on the activities conducted, predicted noise levels at the nearest residential land use could reach levels of approximately 75 dBA L_{eq}. Landscape maintenance activities occurring during the more noise-sensitive nighttime hours could result in increased levels of annoyance and potential sleep disruption to occupants of nearby residential land uses.

Library and Recreation Center

Mechanical building equipment (e.g., heating, ventilation, and air conditioning systems, and boilers) associated with the proposed library and recreation building could generate noise levels of approximately 70 to 80 dBA L_{eq} at 3 feet from the source. The specific design and location of onsite mechanical equipment associated with the proposed structures has not yet been determined. However, mechanical equipment systems would typically be shielded from direct public exposure and usually housed on rooftops, within equipment rooms, or within exterior enclosures (U.S. EPA 1971). Assuming an operational noise level of 80 dBA L_{eq} at 3 feet, predicted noise levels at the nearest residential land use would be approximately 53 dBA L_{eq}, which would not exceed the City's noise standard of 55 dBA L_{eq}. The use of building mechanical systems is typically intermittent, would likely be limited to the daytime hours of operation, and would be largely masked by ambient traffic noise levels.

In addition to building mechanical equipment, the proposed recreation center would include various noise-generating interior recreational uses, including gymnasiums, exercise rooms, and multi-purpose rooms. In general, noise generated by interior recreational activities would typically not be detectable within approximately 50 feet of the exterior of the structure. Predicted noise levels at the nearest noise-sensitive land uses would be largely masked by ambient traffic noise levels and would not be anticipated result in a significant increase in ambient noise levels that would exceed the City's noise standard of 55 dBA L_{eq}.

Passive Recreation Area

The Passive Recreation Area would serve as a buffer between the more noise-intensive active park uses and land uses located south of the park site. The Passive Recreation Area would not include intensive recreational uses that would be anticipated to result in a significant increase in ambient noise levels. Passive recreational activities would potentially include walking and biking trails, bocce ball, disc golf, or an arboretum. As discussed earlier in this section, noise levels associated with these types of uses would not result in a significant increase in ambient noise levels that would exceed the City's noise standard of 55 dBA L_{eq}. However, as discussed above, onsite landscape maintenance activities could result in a significant increase in ambient noise levels at nearby noise-sensitive land uses. Increases in ambient noise levels occurring during the more noise-sensitive nighttime hours would be of particular concern due to the increased potential for annoyance and sleep disruption to occupants of nearby residential land uses.

Impact Summary

Recreational uses associated with the proposed active sports park, including the proposed stadium, baseball, and softball facilities would result in significant increases in ambient noise levels at nearby noise-sensitive land uses that could exceed the City's noise standard of 55 dBA L_{eq}. Depending on final site design, the proposed skate park, BMX track, paintball course, and ball fields developed as part of the future expansion area could also result in significant increases in ambient noise levels at nearby noise-sensitive land uses, particularly if multiple events were to occur simultaneously, and could also exceed the City's noise standard of 55 dBA L_{eq}. In addition to recreational uses, landscape maintenance activities occurring throughout the project area could also result in a significant increase in ambient noise levels at nearby noise-sensitive land uses. Landscape maintenance activities occurring during the more noise-sensitive nighttime hours could result in increased levels of annoyance and potential sleep disruption to occupants of nearby residential land uses. For these reasons, noise generated by these proposed recreational uses would be considered to have a potentially significant impact. Noise generated by other onsite activities, including children's play areas, hard courts, bocce ball courts, shuffle board courts, soccer fields, trails, and parking areas would not be anticipated to result in a significant increase in ambient noise levels that would exceed the City's noise standard of 55 dBA L_{eq} at nearby receptors.

Mitigation Measure 2

The following mitigation measures shall be implemented:

a. Prior to construction and final design of the proposed active sports park, an acoustical analysis shall be conducted to evaluate noise impacts associated with the proposed stadium, as well as any baseball and softball fields to be equipped with public address systems. Noise-reduction measures shall be incorporated to reduce operational noise levels. Noise-reduction measures may include, but are not limited to, the use of setbacks, placement of buildings between noise-sensitive receptors and onsite noise sources, use of noise barriers and/or berms, and orientation of exterior PA-system speakers away from nearby noise-sensitive land uses.

b. Prior to construction and final design of the proposed expansion area, an acoustical analysis shall be conducted to evaluate noise impacts associated with proposed noise-generating uses, including the proposed skate park, BMX track, paintball course, and baseball/softball fields. Noise-reduction measures shall be incorporated to reduce operational noise levels. Noise-reduction measures may include, but are not limited to, the use of setbacks, placement of buildings between noise-sensitive receptors and onsite

noise sources, use of noise barriers and/or berms, and orientation of exterior PA-system speakers away from nearby noise-sensitive land uses.

c. Onsite exterior recreational activities shall be limited to between the hours of 7:00 a.m. and 10:00 p.m.

d. Landscape maintenance activities shall be limited to between the hours of 7:00 a.m. and 10:00 p.m., Monday through Saturday. Landscape maintenance activities shall be prohibited on Sundays and federal holidays.

Timing/Implementation:	Implemented prior to approval of Building Permits.
Monitoring/Enforcement:	*City of Tracy*

Significance After Mitigation

Implementation of the above mitigation measure would require that an acoustical assessment be prepared to identify noise-reduction measures necessary to reduce noise impacts at nearby noise-sensitive land uses. Restrictions on hours of use for onsite exterior recreational facilities and landscape maintenance activities would reduce potential levels of annoyance and activity interference at nearby noise-sensitive land uses. However, even with implementation of available mitigation measures, noise levels associated with some onsite land uses, such as the proposed stadium, would still be anticipated to result in a significant increase in ambient noise levels that would exceed the City's noise standard of 55 dBA L_{eq} at the nearest noise-sensitive land uses. As a result, this impact would be considered *significant and unavoidable*.

Increases in Long-term Operational Traffic Noise

Impact 3 *Implementation of the proposed project would result in significant increase in traffic noise levels. This would be a significant impact.*

Implementation of the proposed project would result in increased traffic volumes on some area roadways. The increase in traffic volumes resulting from implementation of the proposed project would, therefore, contribute to predicted increases in traffic noise levels. The FHWA roadway noise prediction model was used to predict traffic noise levels along primarily affected roadway segments, with and without implementation of the proposed project. Modeling was conducted based on predicted traffic volumes obtained from the traffic analysis prepared for this project for near-term weekday and Saturday traffic conditions. Predicted traffic noise levels and increases attributable to the proposed project for weekday and Saturday traffic conditions are summarized in Table 10 and Table 11, respectively. The project's contribution to traffic noise levels along area roadways was determined by comparing the predicted noise levels with and without project-generated traffic.

Based on the traffic noise modeling conducted, implementation of the proposed project would result in near-term increases in weekday traffic noise levels of approximately 2.5 dBA, or less, along primarily affected area roadway segments. During weekday operations, near-term implementation of the proposed project would not result in a significant increase (i.e., 3 dBA or greater) in traffic noise levels. During near-term Saturday traffic conditions, implementation of the proposed project would not result in increased traffic noise levels of up to approximately 8 dBA CNEL/L_{dn}. Significant increase in traffic noise levels would be projected to occur along Corral Hollow Road, north of Larch Road; Larch Road, between Corral Hollow Road and N. Tracy Boulevard; as well as, portions of N. Tracy Boulevard to the north and south of Larch Road. Predicted noise levels at residential land uses located adjacent to N. Tracy Boulevard would exceed the City of Tracy's General Plan noise criteria of 60 dBA CNEL/L_{dn} for land use

compatibility. As a result, predicted increases in traffic noise levels associated with the proposed project would be considered *significant*.

Mitigation Measure 3

Implement Mitigation Measure 2,c.

Timing/Implementation: Implemented prior to approval of Building Permits.
Monitoring/Enforcement: City of Tracy

Significance After Mitigation

Implementation of Mitigation Measure 2,c would limit hours of operation to between the daytime hours of 7:00 a.m. and 10:00 p.m. With implementation, increases in vehicle traffic and associated noise levels along primarily affected roadway segments would be limited to the daytime hours, which would reduce potential levels of annoyance and sleep disruption to occupants of nearby residential land uses. However, significant increases in ambient noise levels at receptors located along primarily affected roadway segments would still be anticipated to occur. Because access to noise-sensitive land uses located adjacent to N. Tracy Boulevard would need to be maintained from this same roadway segment, construction of a sound barrier along this roadway segment would not be practical. No additional mitigation measures have been identified that would reduce this impact to a less-than-significant level. As a result, this impact would be considered significant and unavoidable.

Table 10
Predicted Increases in Traffic Noise Levels
Near-Term Conditions - Weekday

Roadway	Predicted CNEL, 50 Feet from Near-Travel Lane Centerline		Predicted Increase	Significant Increase?
	Without Project	With Project		
Corral Hollow Road, North of Larch Road	58.6	60.2	1.5	No
Corral Hollow Road, South of Larch Road	58.6	60.2	1.6	No
Larch Road, West of Corral Hollow Road	56.4	56.4	0.0	No
Larch Road, East of Corral Hollow Road	55.5	56.9	1.4	No
N. Tracy Boulevard, North of Larch Road	60.2	62.7	2.5	No
N. Tracy Boulevard, South of Larch Road	60.8	61.9	1.1	No
Larch Road, West of N. Tracy Boulevard	55.6	55.8	0.1	No
Larch Road, East of N. Tracy Boulevard	57.4	57.7	0.4	No

Traffic noise levels were calculated using the FHWA roadway noise prediction model (FHWA-RD-77-108), based on data obtained from the traffic analysis prepared for this project (Fehr & Peers 2009). Assumes no natural or man-made shielding (e.g., vegetation, berms, walls, buildings).

Table 11 Predicted Increases in Traffic Noise Levels Near-Term Conditions - Saturday				
Roadway	Predicted CNEL, 50 Feet from Near-Travel Lane Centerline		Predicted Increase	Significant Increase?
	Without Project	With Project		
Corral Hollow Road, North of Larch Road	57.7	64.3	6.7	Yes
Corral Hollow Road, South of Larch Road	57.6	59.5	1.8	No
Larch Road, West of Corral Hollow Road	54.6	54.6	0.0	No
Larch Road, East of Corral Hollow Road	54.9	59.0	4.1	Yes
N. Tracy Boulevard, North of Larch Road	59.6	67.3	7.8	Yes
N. Tracy Boulevard, South of Larch Road	59.9	65.8	5.9	Yes
Larch Road, West of N. Tracy Boulevard	55.2	59.2	4.0	Yes
Larch Road, East of N. Tracy Boulevard	55.4	56.6	1.3	No
Traffic noise levels were calculated using the FHWA roadway noise prediction model (FHWA-RD-77-108), based on data obtained from the traffic analysis prepared for this project (Fehr & Peers 2009). Assumes no natural or man-made shielding (e.g., vegetation, berms, walls, buildings).				

Exposure of Sensitive Receptors to Groundborne Vibration

Impact 4 *Exposure to ground-borne vibration levels would not exceed applicable groundborne vibration criterion at nearby existing or proposed land uses. This impact would be less than significant.*

No major stationary sources of groundborne vibration were identified in the project area that would result in the long-term exposure of proposed onsite land uses to unacceptable levels of ground vibration. In addition, the proposed project would not involve the use of any major equipment or processes that would result in potentially significant levels of ground vibration that would exceed these standards at nearby existing land uses. However, construction activities associated with the proposed project would require the use of various tractors, trucks, and jackhammers that could result in intermittent increases in groundborne vibration levels. The use of major groundborne vibration-generating construction equipment/processes (i.e., blasting, pile driving) is not anticipated to be required for construction of future onsite land uses.

Groundborne vibration levels commonly associated with construction equipment are summarized in Table 12. Based on the levels presented in Table 12, groundborne vibration generated by construction equipment would not be anticipated to exceed approximately 0.09 inches per second ppv at 25 feet. Predicted vibration levels would not be anticipated to exceed recommended criteria for structural damage and human annoyance (0.2 and 0.1 in/sec ppv, respectively) at nearby land uses. As a result, short-term groundborne vibration impacts would be considered *less than significant*.

Table 12 Representative Vibration Source Levels for Construction Equipment	
Equipment	Peak Particle Velocity at 25 Feet (In/Sec)
Large Bulldozers	0.089
Loaded Trucks	0.076
Jackhammer	0.035
Small Bulldozers	0.003
Source: FTA 2006, Caltrans 2004	

Compatibility of Proposed Land Uses with Projected On-Site Noise Levels

Impact 5 *Projected on-site transportation noise levels at proposed on-site recreational uses would not exceed the City's "normally acceptable" noise exposure standards for land use compatibility. However, depending on final site design of the proposed future expansion area, it is conceivable that the proposed library could be located within the projected future 60 dBA CNEL/L_{dn} noise contour of Corral Hollow Road, which would exceed the City's "normally acceptable" noise criteria for land use compatibility. As a result, this impact is considered potentially significant.*

As previously discussed, the proposed project would include construction and operation of various recreational uses. In addition, the proposed future expansion area could also include construction and operation of a library. For exterior recreational uses, the City's "normally acceptable" noise standard is 65 dBA CNEL/L_{dn}. Libraries are considered "normally acceptable" within areas of 60 dBA CNEL/L_{dn}, or less. Exterior recreational uses and libraries would be considered "conditionally acceptable" at levels up to 75 dBA CNEL/L_{dn}, provided needed noise insulation features are included in the project design (Table 2).

Ambient noise levels within the project area are primarily influenced by vehicle traffic on area roadways. Therefore, for determination of land use compatibility, predicted traffic noise contours for adjacent roadways were modeled for future cumulative conditions, with implementation of the proposed project. Predicted distances to future cumulative traffic noise contours are summarized in Table 13.

Table 13 Predicted Future Cumulative Traffic Noise Contours		
Roadway Segment	Distances from Roadway Centerline to Predicted CNEL/L_{dn} Noise Contours (feet)1	
	60	65
Corral Hollow Road, North of Larch Road	70	WR
N. Tracy Boulevard, North of Larch Road	111	52
Traffic noise levels were calculated using the FHWA roadway noise prediction model (FHWA-RD-77-108), based on data obtained from the traffic analysis prepared for this project (Fehr & Peers 2009). Assumes no natural or man-made shielding (e.g., vegetation, berms, walls, buildings). *WR=Within Roadway Right-of-Way*		

Traffic noise contours were modeled based on data obtained from the traffic analysis prepared for this project. Based on the modeling conducted, the projected future cumulative 60 dBA CNEL/L_{dn} noise contour, with project implementation, would extend to a distance of approximately 70 feet from the roadway centerline of Corral Hollow Road. The projected future 65 dBA CNEL/L_{dn} noise contour for Corral Hollow Road would not extend beyond the roadway right-of-way. Under these same future cumulative conditions, the projected 60 and 65 dBA CNEL/L_{dn} noise contours for the adjacent segment of N. Tracy Boulevard would extend to distances of approximately 111 and 52 feet, respectively, from the roadway centerline.

Based on the projected future cumulative traffic noise contours identified above, onsite recreational participants and spectators would not be exposed to exterior noise levels in excess of the City's "normally acceptable" noise level of 65 dBA CNEL/L_{dn}. However, depending on final site design of the proposed future expansion area, it is conceivable that the proposed library could be located within the projected future 60 dBA CNEL/L_{dn} noise contour of Corral Hollow Road, which would exceed the City's "normally acceptable" noise criteria for land use compatibility. As a result, this impact is considered potentially significant.

Mitigation Measure 5

a. The proposed library shall be located in excess of 70 feet from the roadway centerline of Corral Hollow Road; or,
b. An acoustical analysis shall be prepared to identify appropriate mitigation measures to be incorporated to ensure that predicted background interior noise levels of the proposed library would not exceed a "normally acceptable" interior noise level of 45 dBA CNEL/L_{dn}.

Timing/Implementation:	Implemented prior to approval of Building Permits.
Monitoring/Enforcement:	*City of Tracy*

Significance After Mitigation

Implementation of Mitigation Measure 5 would ensure that interior noise levels of the proposed library would remain within "normally acceptable" levels. With mitigation, this impact would be considered less than significant.

CUMULATIVE SETTING AND IMPACTS

CUMULATIVE SETTING

The geographic extent of the cumulative setting for noise consists of the project area and the surrounding areas within the City. Cumulative development conditions would result in increased cumulative roadway noise levels, and would also result in increased noise associated with future development. As noted earlier in this report, ambient noise levels in the project area are influenced primarily by traffic noise emanating from area roadways. No major stationary sources of noise have been identified in the project area. The primary factor for cumulative noise impact analysis is, therefore, the consideration of future traffic noise levels.

CUMULATIVE IMPACTS

Contribution to Cumulative Noise Levels

Impact 6 *Implementation of the proposed project would result in a significant contribution to cumulative noise levels at nearby land uses. This is a significant impact.*

Future cumulative traffic noise levels, with and without implementation of the proposed project, were calculated using the FHWA roadway noise prediction model (FHWA-RD-77-108) based on California vehicle reference noise levels and traffic data obtained from the traffic analysis prepared for this project. Modeling was conducted for future cumulative weekday and Saturday traffic conditions (Tables 14 and 15, respectively). The project's contribution to the cumulative traffic noise levels along area roadways was determined by comparing the predicted noise levels with and without project-generated traffic. Based on the modeling conducted, implementation of the proposed project would result in a significant increase in future cumulative weekday traffic noise levels of approximately 3.6 dBA CNEL along N. Tracy Boulevard, north of Larch Road. During future cumulative Saturday traffic conditions, implementation of the proposed project would result in significant increases in traffic noise levels along Corral Hollow Road, north of Larch Road, and N. Tracy Boulevard, to the north and south of Larch Road. This impact would be considered significant.

Table 14
Predicted Increases in Traffic Noise Levels
Cumulative Conditions - Weekday

Roadway	Predicted CNEL, 50 Feet from Near-Travel Lane Centerline		Predicted Increase	Significant Increase?
	Without Project	With Project		
Corral Hollow Road, North of Larch Road	59.0	61.4	2.4	No
Corral Hollow Road, South of Larch Road	66.0	66.2	0.3	No
Larch Road, West of Corral Hollow Road	67.2	67.2	0.0	No
Larch Road, East of Corral Hollow Road	64.0	64.0	0.0	No
N. Tracy Boulevard, North of Larch Road	60.9	64.5	3.6	Yes
N. Tracy Boulevard, South of Larch Road	65.5	66.3	0.8	No
Larch Road, West of N. Tracy Boulevard	64.0	64.0	0.0	No
Larch Road, East of N. Tracy Boulevard	61.4	61.7	0.3	No

Traffic noise levels were calculated using the FHWA roadway noise prediction model (FHWA-RD-77-108), based on data obtained from the traffic analysis prepared for this project (Fehr & Peers 2009). Assumes no natural or man-made shielding (e.g., vegetation, berms, walls, buildings).

Table 15 Predicted Increases in Traffic Noise Levels Cumulative Conditions - Saturday				
Roadway	Predicted CNEL, 50 Feet from Near-Travel Lane Centerline		Predicted Increase	Significant Increase?
	Without Project	With Project		
Corral Hollow Road, North of Larch Road	61.1	65.7	4.7	Yes
Corral Hollow Road, South of Larch Road	65.8	66.3	0.5	No
Larch Road, West of Corral Hollow Road	67.1	67.1	0.0	No
Larch Road, East of Corral Hollow Road	64.2	64.9	0.8	No
N. Tracy Boulevard, North of Larch Road	62.5	68.6	6.1	Yes
N. Tracy Boulevard, South of Larch Road	66.0	68.6	2.6	Yes
Larch Road, West of N. Tracy Boulevard	64.2	65.0	0.8	No
Larch Road, East of N. Tracy Boulevard	60.8	61.4	0.6	No
Traffic noise levels were calculated using the FHWA roadway noise prediction model (FHWA-RD-77-108), based on data obtained from the traffic analysis prepared for this project (Fehr & Peers 2009). Assumes no natural or man-made shielding (e.g., vegetation, berms, walls, buildings).				

Mitigation Measure 6

Implement Mitigation Measure 2, c.

Timing/Implementation: Implemented prior to approval of Building Permits.
Monitoring/Enforcement: City of Tracy

Significance After Mitigation

Implementation of Mitigation Measure 2,c would limit hours of operation to between the daytime hours of 7:00 a.m. and 10:00 p.m. With implementation, increases in vehicle traffic and associated noise levels along primarily affected roadway segments would be limited to the daytime hours, which would reduce potential levels of annoyance and sleep disruption to occupants of nearby residential land uses. However, significant increases in ambient noise levels at receptors located along primarily affected roadway segments would still be anticipated to occur. Because access to adjacent noise-sensitive land uses from primarily affected roadway segments would need to be maintained, construction of sound barriers along primarily affected roadway segments would not be practical. No additional mitigation measures have been identified that would reduce this impact to a less-than-significant level. As a result, this impact would be considered significant and unavoidable.

REFERENCES

City of Tracy. 2003. City of Tracy General Plan.

City of Tracy. Accessed: March 18, 2009. url: http://ordlink.com/codes/tracy/_DATA/TITLTE04. City of Tracy Municipal Code; Title 4, Public Welfare, Morals and Conduct; Chapter 4.12, Miscellaneous Regulations.

Fehr & Peers. May 2009. Draft Transportation Impact Analysis Report, Holly Sugar Sports Park.

Irvine Unified School District (IUSD). December 2008. University High School Stadium Draft EIR.

State of California, Department of Transportation (Caltrans). 1998. California Department of Transportation (Caltrans). Technical Noise Supplement.

State of California Department of Transportation (Caltrans). 2002. Transportation Related Earthborne Vibrations.

State of California Department of Transportation (Caltrans). June 2004. Transportation and Construction-Induced Vibration Guidance Manual.

State of California Department of Transportation (Caltrans). May 2009. EIR/EA Annotated Outline.

United States Department of Transportation, Federal Transit Administration (FTA). April 2006. Transit Noise and Vibration Impact Assessment.

United States Environmental Protection Agency (EPA). December 31, 1971. Noise From Construction Equipment and Operations, Building Equipment, and Home Appliances.

Van Orden, Paul, Noise Control Officer, Planning and Development Review, City of Portland. February 2, 2006. Noise Measurements Conducted at Existing Skate Park Facilities.

APPENDIX A

FHWA TRAFFIC NOISE MODELING

WEEKDAY

AVG TRAFFIC DISTRIBUTION PERCENTAGES

	DAY	EVENING	NIGHT
AUTOS	75.51	12.57	9.34
M-TRUCKS	1.56	0.09	0.19
H-TRUCKS	0.64	0.02	0.08

```
EXISTING
CORRAL HOLLOW RD, NORTH OF LARCH ROAD
ADT:  1720     SPEED:  40     ACTIVE HALF WIDTH (FT):  6
SITE CHARACTERISTICS: SOFT     GRADE (PERCENT):  .2
CNEL AT 50 FT FROM NEAR TRAVEL LANE CENTERLINE =  57.97
* *  DISTANCE (FEET) FROM ROADWAY CENTERLINE TO CNEL * *
70 CNEL  65 CNEL   60 CNEL   55 CNEL
-------  -------   -------   -------
   0.0       0.0       0.0      88.0
CORRAL HOLLOW RD, SOUTH OF LARCH ROAD
ADT:  3610     SPEED:  30     ACTIVE HALF WIDTH (FT):  6
SITE CHARACTERISTICS: SOFT     GRADE (PERCENT):  .2
CNEL AT 50 FT FROM NEAR TRAVEL LANE CENTERLINE =  58.16
* *  DISTANCE (FEET) FROM ROADWAY CENTERLINE TO CNEL * *
70 CNEL  65 CNEL   60 CNEL   55 CNEL
-------  -------   -------   -------
   0.0       0.0       0.0      90.6
LARCH ROAD, WEST OF CORRAL HOLLOW RD
ADT:  2180     SPEED:  30     ACTIVE HALF WIDTH (FT):  6
SITE CHARACTERISTICS: SOFT     GRADE (PERCENT):  .2
CNEL AT 50 FT FROM NEAR TRAVEL LANE CENTERLINE =  55.97
* *  DISTANCE (FEET) FROM ROADWAY CENTERLINE TO CNEL * *
70 CNEL  65 CNEL   60 CNEL   55 CNEL
-------  -------   -------   -------
   0.0       0.0       0.0      64.9
LARCH ROAD, EAST OF CORRAL HOLLOW RD
ADT:  2790     SPEED:  25     ACTIVE HALF WIDTH (FT):  6
SITE CHARACTERISTICS: SOFT     GRADE (PERCENT):  .2
CNEL AT 50 FT FROM NEAR TRAVEL LANE CENTERLINE =  55.18
* *  DISTANCE (FEET) FROM ROADWAY CENTERLINE TO CNEL * *
70 CNEL  65 CNEL   60 CNEL   55 CNEL
-------  -------   -------   -------
   0.0       0.0       0.0      57.5
TRACY BLVD, NORTH OF LARCH RD
ADT:  2670     SPEED:  40     ACTIVE HALF WIDTH (FT):  6
SITE CHARACTERISTICS: SOFT     GRADE (PERCENT):  .2
CNEL AT 50 FT FROM NEAR TRAVEL LANE CENTERLINE =  59.88
* *  DISTANCE (FEET) FROM ROADWAY CENTERLINE TO CNEL * *
70 CNEL  65 CNEL   60 CNEL   55 CNEL
-------  -------   -------   -------
   0.0       0.0      55.0     117.8
TRACY BLVD, SOUTH OF LARCH RD
ADT:  6370     SPEED:  30     ACTIVE HALF WIDTH (FT):  6
SITE CHARACTERISTICS: SOFT     GRADE (PERCENT):  .2
CNEL AT 50 FT FROM NEAR TRAVEL LANE CENTERLINE =  60.63
* *  DISTANCE (FEET) FROM ROADWAY CENTERLINE TO CNEL * *
```

70 CNEL 65 CNEL 60 CNEL 55 CNEL
------- ------- ------- -------
0.0 0.0 61.6 132.1

LARCH ROAD, WEST OF TRACY BLVD,
ADT: 2890 SPEED: 25 ACTIVE HALF WIDTH (FT): 6
SITE CHARACTERISTICS: SOFT GRADE (PERCENT): .2
CNEL AT 50 FT FROM NEAR TRAVEL LANE CENTERLINE = 55.33
* * DISTANCE (FEET) FROM ROADWAY CENTERLINE TO CNEL * *
70 CNEL 65 CNEL 60 CNEL 55 CNEL
------- ------- ------- -------
0.0 0.0 0.0 58.9
LARCH ROAD, EAST OF TRACY BLVD,
ADT: 4250 SPEED: 25 ACTIVE HALF WIDTH (FT): 6
SITE CHARACTERISTICS: SOFT GRADE (PERCENT): .2
CNEL AT 50 FT FROM NEAR TRAVEL LANE CENTERLINE = 57.01
* * DISTANCE (FEET) FROM ROADWAY CENTERLINE TO CNEL * *
70 CNEL 65 CNEL 60 CNEL 55 CNEL
------- ------- ------- -------
0.0 0.0 0.0 76.0

NEAR-TERM WITHOUT
CORRAL HOLLOW RD, NORTH OF LARCH ROAD
ADT: 2000 SPEED: 40 ACTIVE HALF WIDTH (FT): 6
SITE CHARACTERISTICS: SOFT GRADE (PERCENT): .2
CNEL AT 50 FT FROM NEAR TRAVEL LANE CENTERLINE = 58.62
* * DISTANCE (FEET) FROM ROADWAY CENTERLINE TO CNEL * *
70 CNEL 65 CNEL 60 CNEL 55 CNEL
------- ------- ------- -------
0.0 0.0 0.0 97.3
CORRAL HOLLOW RD, SOUTH OF LARCH ROAD
ADT: 4000 SPEED: 30 ACTIVE HALF WIDTH (FT): 6
SITE CHARACTERISTICS: SOFT GRADE (PERCENT): .2
CNEL AT 50 FT FROM NEAR TRAVEL LANE CENTERLINE = 58.60
* * DISTANCE (FEET) FROM ROADWAY CENTERLINE TO CNEL * *
70 CNEL 65 CNEL 60 CNEL 55 CNEL
------- ------- ------- -------
0.0 0.0 0.0 97.0
LARCH ROAD, WEST OF CORRAL HOLLOW RD
ADT: 2400 SPEED: 30 ACTIVE HALF WIDTH (FT): 6
SITE CHARACTERISTICS: SOFT GRADE (PERCENT): .2
CNEL AT 50 FT FROM NEAR TRAVEL LANE CENTERLINE = 56.39
* * DISTANCE (FEET) FROM ROADWAY CENTERLINE TO CNEL * *
70 CNEL 65 CNEL 60 CNEL 55 CNEL
------- ------- ------- -------
0.0 0.0 0.0 69.1
LARCH ROAD, EAST OF CORRAL HOLLOW RD
ADT: 3000 SPEED: 25 ACTIVE HALF WIDTH (FT): 6
SITE CHARACTERISTICS: SOFT GRADE (PERCENT): .2
CNEL AT 50 FT FROM NEAR TRAVEL LANE CENTERLINE = 55.50
* * DISTANCE (FEET) FROM ROADWAY CENTERLINE TO CNEL * *
70 CNEL 65 CNEL 60 CNEL 55 CNEL
------- ------- ------- -------
0.0 0.0 0.0 60.4
TRACY BLVD, NORTH OF LARCH RD

ADT: 2900 SPEED: 40 ACTIVE HALF WIDTH (FT): 6
SITE CHARACTERISTICS: SOFT GRADE (PERCENT): .2
CNEL AT 50 FT FROM NEAR TRAVEL LANE CENTERLINE = 60.24
* * DISTANCE (FEET) FROM ROADWAY CENTERLINE TO CNEL * *
70 CNEL 65 CNEL 60 CNEL 55 CNEL
--- --- --- ---
0.0 0.0 58.0 124.5

TRACY BLVD, SOUTH OF LARCH RD
ADT: 6600 SPEED: 30 ACTIVE HALF WIDTH (FT): 6
SITE CHARACTERISTICS: SOFT GRADE (PERCENT): .2
CNEL AT 50 FT FROM NEAR TRAVEL LANE CENTERLINE = 60.78
* * DISTANCE (FEET) FROM ROADWAY CENTERLINE TO CNEL * *
70 CNEL 65 CNEL 60 CNEL 55 CNEL
--- --- --- ---
0.0 0.0 63.0 135.3
LARCH ROAD, WEST OF TRACY BLVD,
ADT: 3100 SPEED: 25 ACTIVE HALF WIDTH (FT): 6
SITE CHARACTERISTICS: SOFT GRADE (PERCENT): .2
CNEL AT 50 FT FROM NEAR TRAVEL LANE CENTERLINE = 55.64
* * DISTANCE (FEET) FROM ROADWAY CENTERLINE TO CNEL * *
70 CNEL 65 CNEL 60 CNEL 55 CNEL
--- --- --- ---
0.0 0.0 0.0 61.7
LARCH ROAD, EAST OF TRACY BLVD,
ADT: 4600 SPEED: 25 ACTIVE HALF WIDTH (FT): 6
SITE CHARACTERISTICS: SOFT GRADE (PERCENT): .2
CNEL AT 50 FT FROM NEAR TRAVEL LANE CENTERLINE = 57.35
* * DISTANCE (FEET) FROM ROADWAY CENTERLINE TO CNEL * *
70 CNEL 65 CNEL 60 CNEL 55 CNEL
--- --- --- ---
0.0 0.0 0.0 80.1

NEAR-TERM WITH PROJECT
CORRAL HOLLOW RD, NORTH OF LARCH ROAD
ADT: 2840 SPEED: 40 ACTIVE HALF WIDTH (FT): 6
SITE CHARACTERISTICS: SOFT GRADE (PERCENT): .2
CNEL AT 50 FT FROM NEAR TRAVEL LANE CENTERLINE = 60.15
* * DISTANCE (FEET) FROM ROADWAY CENTERLINE TO CNEL * *
70 CNEL 65 CNEL 60 CNEL 55 CNEL
--- --- --- ---
0.0 0.0 57.2 122.8
CORRAL HOLLOW RD, SOUTH OF LARCH ROAD
ADT: 5730 SPEED: 30 ACTIVE HALF WIDTH (FT): 6
SITE CHARACTERISTICS: SOFT GRADE (PERCENT): .2
CNEL AT 50 FT FROM NEAR TRAVEL LANE CENTERLINE = 60.17
* * DISTANCE (FEET) FROM ROADWAY CENTERLINE TO CNEL * *
70 CNEL 65 CNEL 60 CNEL 55 CNEL
--- --- --- ---
0.0 0.0 57.4 123.1
LARCH ROAD, WEST OF CORRAL HOLLOW RD
ADT: 2400 SPEED: 30 ACTIVE HALF WIDTH (FT): 6
SITE CHARACTERISTICS: SOFT GRADE (PERCENT): .2
CNEL AT 50 FT FROM NEAR TRAVEL LANE CENTERLINE = 56.39
* * DISTANCE (FEET) FROM ROADWAY CENTERLINE TO CNEL * *
70 CNEL 65 CNEL 60 CNEL 55 CNEL

```
------- -------  -------  -------
   0.0      0.0      0.0     69.1
LARCH ROAD, EAST OF CORRAL HOLLOW RD
ADT:  4110     SPEED:  25     ACTIVE HALF WIDTH (FT):  6
SITE CHARACTERISTICS: SOFT     GRADE (PERCENT):  .2
CNEL AT 50 FT FROM NEAR TRAVEL LANE CENTERLINE =  56.86
* *  DISTANCE (FEET) FROM ROADWAY CENTERLINE TO CNEL * *
70 CNEL  65 CNEL   60 CNEL   55 CNEL
------- -------  -------  -------
   0.0      0.0      0.0     74.3


TRACY BLVD, NORTH OF LARCH RD
ADT:  5150     SPEED:  40     ACTIVE HALF WIDTH (FT):  6
SITE CHARACTERISTICS: SOFT     GRADE (PERCENT):  .2
CNEL AT 50 FT FROM NEAR TRAVEL LANE CENTERLINE =  62.73
* *  DISTANCE (FEET) FROM ROADWAY CENTERLINE TO CNEL * *
70 CNEL  65 CNEL   60 CNEL   55 CNEL
------- -------  -------  -------
   0.0      0.0     84.9    182.4
TRACY BLVD, SOUTH OF LARCH RD
ADT:  8530     SPEED:  30     ACTIVE HALF WIDTH (FT):  6
SITE CHARACTERISTICS: SOFT     GRADE (PERCENT):  .2
CNEL AT 50 FT FROM NEAR TRAVEL LANE CENTERLINE =  61.89
* *  DISTANCE (FEET) FROM ROADWAY CENTERLINE TO CNEL * *
70 CNEL  65 CNEL   60 CNEL   55 CNEL
------- -------  -------  -------
   0.0      0.0     74.7    160.4
LARCH ROAD, WEST OF TRACY BLVD,
ADT:  3210     SPEED:  25     ACTIVE HALF WIDTH (FT):  6
SITE CHARACTERISTICS: SOFT     GRADE (PERCENT):  .2
CNEL AT 50 FT FROM NEAR TRAVEL LANE CENTERLINE =  55.79
* *  DISTANCE (FEET) FROM ROADWAY CENTERLINE TO CNEL * *
70 CNEL  65 CNEL   60 CNEL   55 CNEL
------- -------  -------  -------
   0.0      0.0      0.0     63.1
LARCH ROAD, EAST OF TRACY BLVD,
ADT:  5030     SPEED:  25     ACTIVE HALF WIDTH (FT):  6
SITE CHARACTERISTICS: SOFT     GRADE (PERCENT):  .2
CNEL AT 50 FT FROM NEAR TRAVEL LANE CENTERLINE =  57.74
* *  DISTANCE (FEET) FROM ROADWAY CENTERLINE TO CNEL * *
70 CNEL  65 CNEL   60 CNEL   55 CNEL
------- -------  -------  -------
   0.0      0.0      0.0     85.0

CUMULATIVE WITHOUT PROJECT
CORRAL HOLLOW RD, NORTH OF LARCH ROAD
ADT:  2200     SPEED:  40     ACTIVE HALF WIDTH (FT):  6
SITE CHARACTERISTICS: SOFT     GRADE (PERCENT):  .2
CNEL AT 50 FT FROM NEAR TRAVEL LANE CENTERLINE =  59.04
* *  DISTANCE (FEET) FROM ROADWAY CENTERLINE TO CNEL * *
70 CNEL  65 CNEL   60 CNEL   55 CNEL
------- -------  -------  -------
   0.0      0.0      0.0    103.6
CORRAL HOLLOW RD, SOUTH OF LARCH ROAD
ADT:  21700     SPEED:  30     ACTIVE HALF WIDTH (FT):  6
SITE CHARACTERISTICS: SOFT     GRADE (PERCENT):  .2
```

CNEL AT 50 FT FROM NEAR TRAVEL LANE CENTERLINE = 65.95
* * DISTANCE (FEET) FROM ROADWAY CENTERLINE TO CNEL * *
70 CNEL 65 CNEL 60 CNEL 55 CNEL
--- --- --- ---
0.0 64.7 138.8 298.8
LARCH ROAD, WEST OF CORRAL HOLLOW RD
ADT: 29200 SPEED: 30 ACTIVE HALF WIDTH (FT): 6
SITE CHARACTERISTICS: SOFT GRADE (PERCENT): .2
CNEL AT 50 FT FROM NEAR TRAVEL LANE CENTERLINE = 67.24
* * DISTANCE (FEET) FROM ROADWAY CENTERLINE TO CNEL * *
70 CNEL 65 CNEL 60 CNEL 55 CNEL
--- --- --- ---
0.0 78.7 169.1 364.1

LARCH ROAD, EAST OF CORRAL HOLLOW RD
ADT: 21100 SPEED: 25 ACTIVE HALF WIDTH (FT): 6
SITE CHARACTERISTICS: SOFT GRADE (PERCENT): .2
CNEL AT 50 FT FROM NEAR TRAVEL LANE CENTERLINE = 63.97
* * DISTANCE (FEET) FROM ROADWAY CENTERLINE TO CNEL * *
70 CNEL 65 CNEL 60 CNEL 55 CNEL
--- --- --- ---
0.0 0.0 102.5 220.5
TRACY BLVD, NORTH OF LARCH RD
ADT: 3400 SPEED: 40 ACTIVE HALF WIDTH (FT): 6
SITE CHARACTERISTICS: SOFT GRADE (PERCENT): .2
CNEL AT 50 FT FROM NEAR TRAVEL LANE CENTERLINE = 60.93
* * DISTANCE (FEET) FROM ROADWAY CENTERLINE TO CNEL * *
70 CNEL 65 CNEL 60 CNEL 55 CNEL
--- --- --- ---
0.0 0.0 64.5 138.4
TRACY BLVD, SOUTH OF LARCH RD
ADT: 19700 SPEED: 30 ACTIVE HALF WIDTH (FT): 6
SITE CHARACTERISTICS: SOFT GRADE (PERCENT): .2
CNEL AT 50 FT FROM NEAR TRAVEL LANE CENTERLINE = 65.53
* * DISTANCE (FEET) FROM ROADWAY CENTERLINE TO CNEL * *
70 CNEL 65 CNEL 60 CNEL 55 CNEL
--- --- --- ---
0.0 60.7 130.2 280.1
LARCH ROAD, WEST OF TRACY BLVD,
ADT: 21100 SPEED: 25 ACTIVE HALF WIDTH (FT): 6
SITE CHARACTERISTICS: SOFT GRADE (PERCENT): .2
CNEL AT 50 FT FROM NEAR TRAVEL LANE CENTERLINE = 63.97
* * DISTANCE (FEET) FROM ROADWAY CENTERLINE TO CNEL * *
70 CNEL 65 CNEL 60 CNEL 55 CNEL
--- --- --- ---
0.0 0.0 102.5 220.5
LARCH ROAD, EAST OF TRACY BLVD,
ADT: 11600 SPEED: 25 ACTIVE HALF WIDTH (FT): 6
SITE CHARACTERISTICS: SOFT GRADE (PERCENT): .2
CNEL AT 50 FT FROM NEAR TRAVEL LANE CENTERLINE = 61.37
* * DISTANCE (FEET) FROM ROADWAY CENTERLINE TO CNEL * *
70 CNEL 65 CNEL 60 CNEL 55 CNEL
--- --- --- ---
0.0 0.0 68.9 148.1

CUMULATIVE WITH PROJECT

```
CORRAL HOLLOW RD, NORTH OF LARCH ROAD
ADT:  3820     SPEED:  40     ACTIVE HALF WIDTH (FT):  6
SITE CHARACTERISTICS: SOFT     GRADE (PERCENT):  .2
CNEL AT 50 FT FROM NEAR TRAVEL LANE CENTERLINE =  61.43
* *  DISTANCE (FEET) FROM ROADWAY CENTERLINE TO CNEL * *
70 CNEL  65 CNEL   60 CNEL   55 CNEL
-------  -------   -------   -------
   0.0       0.0      69.6     149.5
CORRAL HOLLOW RD, SOUTH OF LARCH ROAD
ADT:  23110     SPEED:  30     ACTIVE HALF WIDTH (FT):  6
SITE CHARACTERISTICS: SOFT     GRADE (PERCENT):  .2
CNEL AT 50 FT FROM NEAR TRAVEL LANE CENTERLINE =  66.22
* *  DISTANCE (FEET) FROM ROADWAY CENTERLINE TO CNEL * *
70 CNEL  65 CNEL   60 CNEL   55 CNEL
-------  -------   -------   -------
   0.0      67.4     144.8     311.6
LARCH ROAD, WEST OF CORRAL HOLLOW RD
ADT:  29200     SPEED:  30     ACTIVE HALF WIDTH (FT):  6
SITE CHARACTERISTICS: SOFT     GRADE (PERCENT):  .2
CNEL AT 50 FT FROM NEAR TRAVEL LANE CENTERLINE =  67.24
* *  DISTANCE (FEET) FROM ROADWAY CENTERLINE TO CNEL * *
70 CNEL  65 CNEL   60 CNEL   55 CNEL
-------  -------   -------   -------
   0.0      78.7     169.1     364.1
LARCH ROAD, EAST OF CORRAL HOLLOW RD
ADT:  21310     SPEED:  25     ACTIVE HALF WIDTH (FT):  6
SITE CHARACTERISTICS: SOFT     GRADE (PERCENT):  .2
CNEL AT 50 FT FROM NEAR TRAVEL LANE CENTERLINE =  64.01
* *  DISTANCE (FEET) FROM ROADWAY CENTERLINE TO CNEL * *
70 CNEL  65 CNEL   60 CNEL   55 CNEL
-------  -------   -------   -------
   0.0       0.0     103.2     222.0
TRACY BLVD, NORTH OF LARCH RD
ADT:  7730     SPEED:  40     ACTIVE HALF WIDTH (FT):  6
SITE CHARACTERISTICS: SOFT     GRADE (PERCENT):  .2
CNEL AT 50 FT FROM NEAR TRAVEL LANE CENTERLINE =  64.50
* *  DISTANCE (FEET) FROM ROADWAY CENTERLINE TO CNEL * *
70 CNEL  65 CNEL   60 CNEL   55 CNEL
-------  -------   -------   -------
   0.0      51.9     111.1     239.1
TRACY BLVD, SOUTH OF LARCH RD
ADT:  23410     SPEED:  30     ACTIVE HALF WIDTH (FT):  6
SITE CHARACTERISTICS: SOFT     GRADE (PERCENT):  .2
CNEL AT 50 FT FROM NEAR TRAVEL LANE CENTERLINE =  66.28
* *  DISTANCE (FEET) FROM ROADWAY CENTERLINE TO CNEL * *
70 CNEL  65 CNEL   60 CNEL   55 CNEL
-------  -------   -------   -------
   0.0      68.0     146.0     314.3
LARCH ROAD, WEST OF TRACY BLVD,
ADT:  21310     SPEED:  25     ACTIVE HALF WIDTH (FT):  6
SITE CHARACTERISTICS: SOFT     GRADE (PERCENT):  .2
CNEL AT 50 FT FROM NEAR TRAVEL LANE CENTERLINE =  64.01
* *  DISTANCE (FEET) FROM ROADWAY CENTERLINE TO CNEL * *
70 CNEL  65 CNEL   60 CNEL   55 CNEL
-------  -------   -------   -------
   0.0       0.0     103.2     222.0
LARCH ROAD, EAST OF TRACY BLVD,
```

ADT: 12430 SPEED: 25 ACTIVE HALF WIDTH (FT): 6
SITE CHARACTERISTICS: SOFT GRADE (PERCENT): .2
CNEL AT 50 FT FROM NEAR TRAVEL LANE CENTERLINE = 61.67
* * DISTANCE (FEET) FROM ROADWAY CENTERLINE TO CNEL * *
70 CNEL 65 CNEL 60 CNEL 55 CNEL
--- --- --- ---
0.0 0.0 72.2 155.0

*Based on peak-hour traffic volumes obtained from the traffic analysis prepared for this project. Assumes peak-hour volumes are approximately 10 percent of average-daily volumes.

SATURDAY

AVG TRAFFIC DISTRIBUTION PERCENTAGES

	DAY	EVENING	NIGHT
AUTOS	75.51	12.57	9.34
M-TRUCKS	1.56	0.09	0.19
H-TRUCKS	0.64	0.02	0.08

EXISTING
CORRAL HOLLOW RD, NORTH OF LARCH ROAD
ADT: 1240 SPEED: 40 ACTIVE HALF WIDTH (FT): 6
SITE CHARACTERISTICS: SOFT GRADE (PERCENT): .2
CNEL AT 50 FT FROM NEAR TRAVEL LANE CENTERLINE = 56.55
* * DISTANCE (FEET) FROM ROADWAY CENTERLINE TO CNEL * *
70 CNEL 65 CNEL 60 CNEL 55 CNEL
--- --- --- ---
0.0 0.0 0.0 70.8
CORRAL HOLLOW RD, SOUTH OF LARCH ROAD
ADT: 2900 SPEED: 30 ACTIVE HALF WIDTH (FT): 6
SITE CHARACTERISTICS: SOFT GRADE (PERCENT): .2
CNEL AT 50 FT FROM NEAR TRAVEL LANE CENTERLINE = 57.21
* * DISTANCE (FEET) FROM ROADWAY CENTERLINE TO CNEL * *
70 CNEL 65 CNEL 60 CNEL 55 CNEL
--- --- --- ---
0.0 0.0 0.0 78.3
LARCH ROAD, WEST OF CORRAL HOLLOW RD
ADT: 1240 SPEED: 30 ACTIVE HALF WIDTH (FT): 6
SITE CHARACTERISTICS: SOFT GRADE (PERCENT): .2
CNEL AT 50 FT FROM NEAR TRAVEL LANE CENTERLINE = 53.52
* * DISTANCE (FEET) FROM ROADWAY CENTERLINE TO CNEL * *
70 CNEL 65 CNEL 60 CNEL 55 CNEL
--- --- --- ---
0.0 0.0 0.0 0.0
LARCH ROAD, EAST OF CORRAL HOLLOW RD
ADT: 2360 SPEED: 25 ACTIVE HALF WIDTH (FT): 6
SITE CHARACTERISTICS: SOFT GRADE (PERCENT): .2
CNEL AT 50 FT FROM NEAR TRAVEL LANE CENTERLINE = 54.45

```
* *  DISTANCE (FEET) FROM ROADWAY CENTERLINE TO CNEL * *
70 CNEL  65 CNEL   60 CNEL   55 CNEL
-------  -------   -------   -------
   0.0       0.0       0.0       51.5
TRACY BLVD, NORTH OF LARCH RD
ADT:  2300      SPEED:  40      ACTIVE HALF WIDTH (FT):  6
SITE CHARACTERISTICS: SOFT     GRADE (PERCENT):  .2
CNEL AT 50 FT FROM NEAR TRAVEL LANE CENTERLINE =  59.23
* *  DISTANCE (FEET) FROM ROADWAY CENTERLINE TO CNEL * *
70 CNEL  65 CNEL   60 CNEL   55 CNEL
-------  -------   -------   -------
   0.0       0.0       0.0      106.7
TRACY BLVD, SOUTH OF LARCH RD
ADT:  5110      SPEED:  30      ACTIVE HALF WIDTH (FT):  6
SITE CHARACTERISTICS: SOFT     GRADE (PERCENT):  .2
CNEL AT 50 FT FROM NEAR TRAVEL LANE CENTERLINE =  59.67
* *  DISTANCE (FEET) FROM ROADWAY CENTERLINE TO CNEL * *
70 CNEL  65 CNEL   60 CNEL   55 CNEL
-------  -------   -------   -------
   0.0       0.0      53.2      114.1


LARCH ROAD, WEST OF TRACY BLVD,
ADT:  2560      SPEED:  25      ACTIVE HALF WIDTH (FT):  6
SITE CHARACTERISTICS: SOFT     GRADE (PERCENT):  .2
CNEL AT 50 FT FROM NEAR TRAVEL LANE CENTERLINE =  54.81
* *  DISTANCE (FEET) FROM ROADWAY CENTERLINE TO CNEL * *
70 CNEL  65 CNEL   60 CNEL   55 CNEL
-------  -------   -------   -------
   0.0       0.0       0.0       54.4
LARCH ROAD, EAST OF TRACY BLVD,
ADT:  2590      SPEED:  25      ACTIVE HALF WIDTH (FT):  6
SITE CHARACTERISTICS: SOFT     GRADE (PERCENT):  .2
CNEL AT 50 FT FROM NEAR TRAVEL LANE CENTERLINE =  54.86
* *  DISTANCE (FEET) FROM ROADWAY CENTERLINE TO CNEL * *
70 CNEL  65 CNEL   60 CNEL   55 CNEL
-------  -------   -------   -------
   0.0       0.0       0.0       54.8

NEAR-TERM WITHOUT
CORRAL HOLLOW RD, NORTH OF LARCH ROAD
ADT:  1600      SPEED:  40      ACTIVE HALF WIDTH (FT):  6
SITE CHARACTERISTICS: SOFT     GRADE (PERCENT):  .2
CNEL AT 50 FT FROM NEAR TRAVEL LANE CENTERLINE =  57.65
* *  DISTANCE (FEET) FROM ROADWAY CENTERLINE TO CNEL * *
70 CNEL  65 CNEL   60 CNEL   55 CNEL
-------  -------   -------   -------
   0.0       0.0       0.0       83.9
CORRAL HOLLOW RD, SOUTH OF LARCH ROAD
ADT:  3200      SPEED:  30      ACTIVE HALF WIDTH (FT):  6
SITE CHARACTERISTICS: SOFT     GRADE (PERCENT):  .2
CNEL AT 50 FT FROM NEAR TRAVEL LANE CENTERLINE =  57.64
* *  DISTANCE (FEET) FROM ROADWAY CENTERLINE TO CNEL * *
70 CNEL  65 CNEL   60 CNEL   55 CNEL
-------  -------   -------   -------
   0.0       0.0       0.0       83.6
LARCH ROAD, WEST OF CORRAL HOLLOW RD
```

ADT: 1600 SPEED: 30 ACTIVE HALF WIDTH (FT): 6
SITE CHARACTERISTICS: SOFT GRADE (PERCENT): .2
CNEL AT 50 FT FROM NEAR TRAVEL LANE CENTERLINE = 54.63
* * DISTANCE (FEET) FROM ROADWAY CENTERLINE TO CNEL * *
70 CNEL 65 CNEL 60 CNEL 55 CNEL
--- --- --- ---
0.0 0.0 0.0 52.9
LARCH ROAD, EAST OF CORRAL HOLLOW RD
ADT: 2600 SPEED: 25 ACTIVE HALF WIDTH (FT): 6
SITE CHARACTERISTICS: SOFT GRADE (PERCENT): .2
CNEL AT 50 FT FROM NEAR TRAVEL LANE CENTERLINE = 54.88
* * DISTANCE (FEET) FROM ROADWAY CENTERLINE TO CNEL * *
70 CNEL 65 CNEL 60 CNEL 55 CNEL
--- --- --- ---
0.0 0.0 0.0 54.9
TRACY BLVD, NORTH OF LARCH RD
ADT: 2500 SPEED: 40 ACTIVE HALF WIDTH (FT): 6
SITE CHARACTERISTICS: SOFT GRADE (PERCENT): .2
CNEL AT 50 FT FROM NEAR TRAVEL LANE CENTERLINE = 59.59
* * DISTANCE (FEET) FROM ROADWAY CENTERLINE TO CNEL * *
70 CNEL 65 CNEL 60 CNEL 55 CNEL
--- --- --- ---
0.0 0.0 52.6 112.8

TRACY BLVD, SOUTH OF LARCH RD
ADT: 5400 SPEED: 30 ACTIVE HALF WIDTH (FT): 6
SITE CHARACTERISTICS: SOFT GRADE (PERCENT): .2
CNEL AT 50 FT FROM NEAR TRAVEL LANE CENTERLINE = 59.91
* * DISTANCE (FEET) FROM ROADWAY CENTERLINE TO CNEL * *
70 CNEL 65 CNEL 60 CNEL 55 CNEL
--- --- --- ---
0.0 0.0 55.2 118.4
LARCH ROAD, WEST OF TRACY BLVD,
ADT: 2800 SPEED: 25 ACTIVE HALF WIDTH (FT): 6
SITE CHARACTERISTICS: SOFT GRADE (PERCENT): .2
CNEL AT 50 FT FROM NEAR TRAVEL LANE CENTERLINE = 55.20
* * DISTANCE (FEET) FROM ROADWAY CENTERLINE TO CNEL * *
70 CNEL 65 CNEL 60 CNEL 55 CNEL
--- --- --- ---
0.0 0.0 0.0 57.7
LARCH ROAD, EAST OF TRACY BLVD,
ADT: 2900 SPEED: 25 ACTIVE HALF WIDTH (FT): 6
SITE CHARACTERISTICS: SOFT GRADE (PERCENT): .2
CNEL AT 50 FT FROM NEAR TRAVEL LANE CENTERLINE = 55.35
* * DISTANCE (FEET) FROM ROADWAY CENTERLINE TO CNEL * *
70 CNEL 65 CNEL 60 CNEL 55 CNEL
--- --- --- ---
0.0 0.0 0.0 59.0

NEAR-TERM WITH PROJECT
CORRAL HOLLOW RD, NORTH OF LARCH ROAD
ADT: 7420 SPEED: 40 ACTIVE HALF WIDTH (FT): 6
SITE CHARACTERISTICS: SOFT GRADE (PERCENT): .2
CNEL AT 50 FT FROM NEAR TRAVEL LANE CENTERLINE = 64.32
* * DISTANCE (FEET) FROM ROADWAY CENTERLINE TO CNEL * *
70 CNEL 65 CNEL 60 CNEL 55 CNEL

```
------- -------  -------  -------
   0.0      50.5     108.1     232.6
CORRAL HOLLOW RD, SOUTH OF LARCH ROAD
ADT:  4870     SPEED:  30     ACTIVE HALF WIDTH (FT):  6
SITE CHARACTERISTICS: SOFT     GRADE (PERCENT):  .2
CNEL AT 50 FT FROM NEAR TRAVEL LANE CENTERLINE =  59.46
* *  DISTANCE (FEET) FROM ROADWAY CENTERLINE TO CNEL * *
70 CNEL  65 CNEL   60 CNEL   55 CNEL
------- -------  -------  -------
   0.0       0.0      51.6     110.5
LARCH ROAD, WEST OF CORRAL HOLLOW RD
ADT:  1600     SPEED:  30     ACTIVE HALF WIDTH (FT):  6
SITE CHARACTERISTICS: SOFT     GRADE (PERCENT):  .2
CNEL AT 50 FT FROM NEAR TRAVEL LANE CENTERLINE =  54.63
* *  DISTANCE (FEET) FROM ROADWAY CENTERLINE TO CNEL * *
70 CNEL  65 CNEL   60 CNEL   55 CNEL
------- -------  -------  -------
   0.0       0.0       0.0      52.9
LARCH ROAD, EAST OF CORRAL HOLLOW RD
ADT:  6750     SPEED:  25     ACTIVE HALF WIDTH (FT):  6
SITE CHARACTERISTICS: SOFT     GRADE (PERCENT):  .2
CNEL AT 50 FT FROM NEAR TRAVEL LANE CENTERLINE =  59.02
* *  DISTANCE (FEET) FROM ROADWAY CENTERLINE TO CNEL * *
70 CNEL  65 CNEL   60 CNEL   55 CNEL
------- -------  -------  -------
   0.0       0.0       0.0     103.3


TRACY BLVD, NORTH OF LARCH RD
ADT:  14890     SPEED:  40     ACTIVE HALF WIDTH (FT):  6
SITE CHARACTERISTICS: SOFT     GRADE (PERCENT):  .2
CNEL AT 50 FT FROM NEAR TRAVEL LANE CENTERLINE =  67.34
* *  DISTANCE (FEET) FROM ROADWAY CENTERLINE TO CNEL * *
70 CNEL  65 CNEL   60 CNEL   55 CNEL
------- -------  -------  -------
   0.0      80.0     171.9     370.0
TRACY BLVD, SOUTH OF LARCH RD
ADT:  20950     SPEED:  30     ACTIVE HALF WIDTH (FT):  6
SITE CHARACTERISTICS: SOFT     GRADE (PERCENT):  .2
CNEL AT 50 FT FROM NEAR TRAVEL LANE CENTERLINE =  65.80
* *  DISTANCE (FEET) FROM ROADWAY CENTERLINE TO CNEL * *
70 CNEL  65 CNEL   60 CNEL   55 CNEL
------- -------  -------  -------
   0.0      63.2     135.6     291.9
LARCH ROAD, WEST OF TRACY BLVD,
ADT:  6950     SPEED:  25     ACTIVE HALF WIDTH (FT):  6
SITE CHARACTERISTICS: SOFT     GRADE (PERCENT):  .2
CNEL AT 50 FT FROM NEAR TRAVEL LANE CENTERLINE =  59.15
* *  DISTANCE (FEET) FROM ROADWAY CENTERLINE TO CNEL * *
70 CNEL  65 CNEL   60 CNEL   55 CNEL
------- -------  -------  -------
   0.0       0.0       0.0     105.3
LARCH ROAD, EAST OF TRACY BLVD,
ADT:  3890     SPEED:  25     ACTIVE HALF WIDTH (FT):  6
SITE CHARACTERISTICS: SOFT     GRADE (PERCENT):  .2
CNEL AT 50 FT FROM NEAR TRAVEL LANE CENTERLINE =  56.62
* *  DISTANCE (FEET) FROM ROADWAY CENTERLINE TO CNEL * *
```

70 CNEL 65 CNEL 60 CNEL 55 CNEL
------- ------- ------- -------
0.0 0.0 0.0 71.7

CUMULATIVE WITHOUT PROJECT
CORRAL HOLLOW RD, NORTH OF LARCH ROAD
ADT: 3500 SPEED: 40 ACTIVE HALF WIDTH (FT): 6
SITE CHARACTERISTICS: SOFT GRADE (PERCENT): .2
CNEL AT 50 FT FROM NEAR TRAVEL LANE CENTERLINE = 61.05
* * DISTANCE (FEET) FROM ROADWAY CENTERLINE TO CNEL * *
70 CNEL 65 CNEL 60 CNEL 55 CNEL
------- ------- ------- -------
0.0 0.0 65.7 141.1
CORRAL HOLLOW RD, SOUTH OF LARCH ROAD
ADT: 21100 SPEED: 30 ACTIVE HALF WIDTH (FT): 6
SITE CHARACTERISTICS: SOFT GRADE (PERCENT): .2
CNEL AT 50 FT FROM NEAR TRAVEL LANE CENTERLINE = 65.83
* * DISTANCE (FEET) FROM ROADWAY CENTERLINE TO CNEL * *
70 CNEL 65 CNEL 60 CNEL 55 CNEL
------- ------- ------- -------
0.0 63.5 136.2 293.3
LARCH ROAD, WEST OF CORRAL HOLLOW RD
ADT: 28100 SPEED: 30 ACTIVE HALF WIDTH (FT): 6
SITE CHARACTERISTICS: SOFT GRADE (PERCENT): .2
CNEL AT 50 FT FROM NEAR TRAVEL LANE CENTERLINE = 67.07
* * DISTANCE (FEET) FROM ROADWAY CENTERLINE TO CNEL * *
70 CNEL 65 CNEL 60 CNEL 55 CNEL
------- ------- ------- -------
0.0 76.7 164.9 354.9

LARCH ROAD, EAST OF CORRAL HOLLOW RD
ADT: 22100 SPEED: 25 ACTIVE HALF WIDTH (FT): 6
SITE CHARACTERISTICS: SOFT GRADE (PERCENT): .2
CNEL AT 50 FT FROM NEAR TRAVEL LANE CENTERLINE = 64.17
* * DISTANCE (FEET) FROM ROADWAY CENTERLINE TO CNEL * *
70 CNEL 65 CNEL 60 CNEL 55 CNEL
------- ------- ------- -------
0.0 0.0 105.7 227.5
TRACY BLVD, NORTH OF LARCH RD
ADT: 4900 SPEED: 40 ACTIVE HALF WIDTH (FT): 6
SITE CHARACTERISTICS: SOFT GRADE (PERCENT): .2
CNEL AT 50 FT FROM NEAR TRAVEL LANE CENTERLINE = 62.52
* * DISTANCE (FEET) FROM ROADWAY CENTERLINE TO CNEL * *
70 CNEL 65 CNEL 60 CNEL 55 CNEL
------- ------- ------- -------
0.0 0.0 82.1 176.5
TRACY BLVD, SOUTH OF LARCH RD
ADT: 21800 SPEED: 30 ACTIVE HALF WIDTH (FT): 6
SITE CHARACTERISTICS: SOFT GRADE (PERCENT): .2
CNEL AT 50 FT FROM NEAR TRAVEL LANE CENTERLINE = 65.97
* * DISTANCE (FEET) FROM ROADWAY CENTERLINE TO CNEL * *
70 CNEL 65 CNEL 60 CNEL 55 CNEL
------- ------- ------- -------
0.0 64.9 139.2 299.7
LARCH ROAD, WEST OF TRACY BLVD,
ADT: 22200 SPEED: 25 ACTIVE HALF WIDTH (FT): 6

SITE CHARACTERISTICS: SOFT GRADE (PERCENT): .2
CNEL AT 50 FT FROM NEAR TRAVEL LANE CENTERLINE = 64.19
* * DISTANCE (FEET) FROM ROADWAY CENTERLINE TO CNEL * *
70 CNEL 65 CNEL 60 CNEL 55 CNEL
--- --- --- ---
0.0 0.0 106.0 228.1
LARCH ROAD, EAST OF TRACY BLVD,
ADT: 10100 SPEED: 25 ACTIVE HALF WIDTH (FT): 6
SITE CHARACTERISTICS: SOFT GRADE (PERCENT): .2
CNEL AT 50 FT FROM NEAR TRAVEL LANE CENTERLINE = 60.77
* * DISTANCE (FEET) FROM ROADWAY CENTERLINE TO CNEL * *
70 CNEL 65 CNEL 60 CNEL 55 CNEL
--- --- --- ---
0.0 0.0 62.9 135.0

CUMULATIVE WITH PROJECT
CORRAL HOLLOW RD, NORTH OF LARCH ROAD
ADT: 10270 SPEED: 40 ACTIVE HALF WIDTH (FT): 6
SITE CHARACTERISTICS: SOFT GRADE (PERCENT): .2
CNEL AT 50 FT FROM NEAR TRAVEL LANE CENTERLINE = 65.73
* * DISTANCE (FEET) FROM ROADWAY CENTERLINE TO CNEL * *
70 CNEL 65 CNEL 60 CNEL 55 CNEL
--- --- --- ---
0.0 62.5 134.2 288.9
CORRAL HOLLOW RD, SOUTH OF LARCH ROAD
ADT: 23550 SPEED: 30 ACTIVE HALF WIDTH (FT): 6
SITE CHARACTERISTICS: SOFT GRADE (PERCENT): .2
CNEL AT 50 FT FROM NEAR TRAVEL LANE CENTERLINE = 66.30
* * DISTANCE (FEET) FROM ROADWAY CENTERLINE TO CNEL * *
70 CNEL 65 CNEL 60 CNEL 55 CNEL
--- --- --- ---
0.0 68.3 146.6 315.5

LARCH ROAD, WEST OF CORRAL HOLLOW RD
ADT: 28100 SPEED: 30 ACTIVE HALF WIDTH (FT): 6
SITE CHARACTERISTICS: SOFT GRADE (PERCENT): .2
CNEL AT 50 FT FROM NEAR TRAVEL LANE CENTERLINE = 67.07
* * DISTANCE (FEET) FROM ROADWAY CENTERLINE TO CNEL * *
70 CNEL 65 CNEL 60 CNEL 55 CNEL
--- --- --- ---
0.0 76.7 164.9 354.9
LARCH ROAD, EAST OF CORRAL HOLLOW RD
ADT: 26420 SPEED: 25 ACTIVE HALF WIDTH (FT): 6
SITE CHARACTERISTICS: SOFT GRADE (PERCENT): .2
CNEL AT 50 FT FROM NEAR TRAVEL LANE CENTERLINE = 64.94
* * DISTANCE (FEET) FROM ROADWAY CENTERLINE TO CNEL * *
70 CNEL 65 CNEL 60 CNEL 55 CNEL
--- --- --- ---
0.0 55.5 119.0 256.1
TRACY BLVD, NORTH OF LARCH RD
ADT: 19780 SPEED: 40 ACTIVE HALF WIDTH (FT): 6
SITE CHARACTERISTICS: SOFT GRADE (PERCENT): .2
CNEL AT 50 FT FROM NEAR TRAVEL LANE CENTERLINE = 68.58
* * DISTANCE (FEET) FROM ROADWAY CENTERLINE TO CNEL * *
70 CNEL 65 CNEL 60 CNEL 55 CNEL
--- --- --- ---

0.0 96.6 207.7 447.2
TRACY BLVD, SOUTH OF LARCH RD
ADT: 39550 SPEED: 30 ACTIVE HALF WIDTH (FT): 6
SITE CHARACTERISTICS: SOFT GRADE (PERCENT): .2
CNEL AT 50 FT FROM NEAR TRAVEL LANE CENTERLINE = 68.56
* * DISTANCE (FEET) FROM ROADWAY CENTERLINE TO CNEL * *
70 CNEL 65 CNEL 60 CNEL 55 CNEL
--- --- --- ---
0.0 96.3 207.0 445.8
LARCH ROAD, WEST OF TRACY BLVD,
ADT: 26520 SPEED: 25 ACTIVE HALF WIDTH (FT): 6
SITE CHARACTERISTICS: SOFT GRADE (PERCENT): .2
CNEL AT 50 FT FROM NEAR TRAVEL LANE CENTERLINE = 64.96
* * DISTANCE (FEET) FROM ROADWAY CENTERLINE TO CNEL * *
70 CNEL 65 CNEL 60 CNEL 55 CNEL
--- --- --- ---
0.0 55.7 119.3 256.8
LARCH ROAD, EAST OF TRACY BLVD,
ADT: 11550 SPEED: 25 ACTIVE HALF WIDTH (FT): 6
SITE CHARACTERISTICS: SOFT GRADE (PERCENT): .2
CNEL AT 50 FT FROM NEAR TRAVEL LANE CENTERLINE = 61.35
* * DISTANCE (FEET) FROM ROADWAY CENTERLINE TO CNEL * *
70 CNEL 65 CNEL 60 CNEL 55 CNEL
--- --- --- ---
0.0 0.0 68.8 147.7

*Based on peak-hour traffic volumes obtained from the traffic analysis prepared for this project. Assumes peak-hour volumes are approximately 10 percent of average-daily volumes.

Draft Transportation Impact Analysis Report

HOLLY SUGAR SPORTS PARK

Prepared for:

City of Tracy

May 2009

WC08-2605

FEHR & PEERS
TRANSPORTATION CONSULTANTS

TABLE OF CONTENTS

EXECUTIVE SUMMARY ..... **i**
Study Area i
Existing Conditions ii
Project Transportation Characteristics ii
Near-Term (2015) Plus Project Operations Analysis ii
Intersection Analysis ..... *ii*
Freeway Analysis ..... *iii*
Cumulative (2030) Plus Project Operations Analysis iii
Intersection Analysis ..... *iii*
Freeway Analysis ..... *vii*
Site Access and On-Site Circulation vii
Project Parking Supply and Demand viii
Construction Traffic viii

CHAPTER 1. INTRODUCTION **1**
1.1 Project Description 1
1.2 Study Area 3
1.2.1 Study Intersections *3*
1.2.2 Freeway Study Segments *3*
1.3 Analysis Scenarios 3
1.4 Analysis Methods 4
1.4.1 Signalized Intersections *4*
1.4.2 Unsignalized Intersections *5*
1.4.3 Freeway Segments *5*
1.5 Transportation Policies 6
1.5.1 City of Tracy *6*
1.5.2 County of San Joaquin *7*
1.5.3 Caltrans *7*
1.5.4 Significance Criteria *7*

CHAPTER 2. SETTING **9**
2.1 Project Location 9
2.2 Study Area Roadways 9
2.3 Existing Pedestrian and Bicycle Facilities 10
2.3.1 Pedestrian Facilities *10*
2.3.2 Bicycle Facilities *10*
2.4 Existing Transit Service 11
2.4.1 Local Fixed-Route Bus Service *11*
2.4.2 Local Commuter-Route Bus Service *11*
2.4.3 Regional Intercity Fixed-Route Bus Service *12*
2.4.4 SJRTD Flexible Fixed-Route Service *12*
2.4.5 SJRTD Commuter Bus Service *12*
2.4.6 Altamont Commuter Express *12*
2.5 Existing Freight Rail 12
2.6 Existing Truck Routes 13
2.7 Existing Data Collection 13
2.8 Existing Intersection Operations 14
2.9 Existing Peak Hour Traffic Signal Warrants 20
2.10 Existing Freeway Level of Service 21

CHAPTER 3. PROJECT CHARACTERISTICS **22**
3.1 Project Description 22

3.2 Trip Generation 22
3.2.1 Trip Generation Assumptions 22
3.2.2 Near-Term Trip Generation 23
3.2.3 Cumulative Trip Generation 23
3.3 Trip Distribution and Assignment 25

CHAPTER 4. NEAR-TERM TRAFFIC CONDITIONS 32
4.1 Near-Term (2015) Roadway Assumptions 32
4.2 Near-Term (2015) Forecasts 32
4.2.1 Near-Term Without Project Traffic 32
4.2.2 Near-Term Plus Project Traffic 33
4.3 Analysis of Near-Term (2015) Conditions 33
4.3.1 Intersection Operations 33
4.3.2 Peak Hour Traffic Signal Warrant Analysis 39
4.3.3 Freeway Analysis 40
4.4 Near-Term (2015) Impacts and Mitigation Measures 40
4.4.1 Non-Impacted Locations Operating Unacceptably 41
4.5 Project Phasing Analysis 42

CHAPTER 5. CUMULATIVE TRAFFIC CONDITIONS 44
5.1 Cumulative (2030) Roadway Assumptions 44
5.1.1 Cumulative Intersection Improvements 45
5.2 Cumulative (2030) Forecasts 45
5.2.1 Cumulative No Project Traffic 46
5.2.2 Cumulative Plus Project Traffic 46
5.3 Analysis of Cumulative (2030) Conditions 53
5.3.1 Intersection Operations 53
5.3.2 Peak Hour Traffic Signal Warrant Analysis 54
5.3.3 Baseline Cumulative Improvements 55
5.3.4 Freeway Analysis 56
5.4 Cumulative (2030) Impacts and Mitigation Measures 57
5.4.1 Non-Impacted Locations Operating Unacceptably 60

CHAPTER 6. SITE ACCESS, CIRCULATION, AND PARKING 62
6.1 Site Access 62
6.1.1 Emergency Vehicle Access 63
6.1.2 Pedestrian Site Access 63
6.1.3 Bicycle Site Access 63
6.1.4 Transit Access 64
6.2 On-Site Circulation 64
6.2.1 Drive Aisles 64
6.2.2 Dead-End Drive Aisles 64
6.2.3 Throat Depths 64
6.2.4 Parking Stall Dimensions 65
6.2.5 Pedestrian On-Site Circulation 65
6.2.6 Bicycle On-Site Circulation 66
6.3 Parking 66
6.3.1 City Code 66
6.3.2 Parking Demand 67

CHAPTER 7. CONSTRUCTION TRAFFIC IMPACTS 69
7.1 Project Construction Activities 69
7.2 Project Construction Traffic 69
7.3 Mitigation 69

APPENDICES

Appendix A: Traffic Data

Appendix B: Synchro Calculation Worksheets

Appendix C: Signal Warrant Worksheets

Appendix D: Freeway Analysis Worksheets

Appendix E: Trip Generation Assumptions

LIST OF FIGURES

Figure 1-1 Project Site Vicinity and Study Locations 2
Figure 2-1 Existing Bicycle Facilities 15
Figure 2-2 Existing Transit Facilities 16
Figure 2-3 Existing Truck Routes 17
Figure 2-4A Existing Peak Hour Traffic Volumes and Intersection Lane Configurations 18
Figure 2-4B Existing Peak Hour Traffic Volumes and Intersection Lane Configurations 19
Figure 3-1 City of Tracy Population Distribution of Youth Ages 5-17 26
Figure 3-2 Regional Population Distribution of Youth Ages 5-17 27
Figure 3-3A Near-Term Peak Hour Project Trip Assignment 28
Figure 3-3B Near-Term Peak Hour Project Trip Assignment 29
Figure 3-4A Cumulative Peak Hour Project Trip Assignment 30
Figure 3-4B Cumulative Peak Hour Project Trip Assignment 31
Figure 4-1A Near-Term No Project Peak Hour Traffic Volumes 35
Figure 4-1B Near-Term No Project Peak Hour Traffic Volumes 36
Figure 4-2A Near-Term Plus Project Peak Hour Traffic Volumes 37
Figure 4-2B Near-Term Plus Project Peak Hour Traffic Volumes 38
Figure 5-1A Cumulative (2030) Intersection Lane Configurations and Traffic Controls 47
Figure 5-1B Cumulative (2030) Intersection Lane Configurations and Traffic Controls 48
Figure 5-2A Cumulative No Project Peak Hour Traffic Volumes 49
Figure 5-2B Cumulative No Project Peak Hour Traffic Volumes 50
Figure 5-3A Cumulative Plus Project Peak Hour Traffic Volumes 51
Figure 5-3B Cumulative Plus Project Peak Hour Traffic Volumes 52
Figure 6-1 Consultant Site Plan Recommendations 68

LIST OF TABLES

Table 1-1 Signalized Intersection LOS Criteria 4

Table 1-2 Unsignalized Intersection LOS Criteria 5

Table 1-3 Freeway Mainline Level of Service Definitions 6

Table 2-1 Existing Peak Hour Intersection Levels of Service 20

Table 2-2 Existing Peak Hour Signal Warrant Analysis 21

Table 2-3 Existing Freeway Segment Level of Service 21

Table 3-1 Peak Hour Trip Generation for Near-Term Conditions 23

Table 3-2 Peak Hour Trip Generation for Cumulative Conditions 24

Table 3-3 Local And Regional Trip Generation By Day Of Week 25

Table 4-1 Near-Term (2015) Peak Hour Intersection Levels of Service 34

Table 4-2 Near-Term (2015) Peak Hour Signal Warrant Analysis 39

Table 4-3 Near-Term (2015) Freeway Segment Level of Service 40

Table 4-4 Phasing Analysis Trip Generation 42

Table 4-5 Phasing Analysis Peak Hour Intersection Levels of Service 43

Table 5-1 Cumulative Intersection Improvements 45

Table 5-2 Cumulative (2030) Peak Hour Intersection Levels of Service 54

Table 5-3 Cumulative (2030) Peak Hour Signal Warrant Analysis 55

Table 5-4 Intersection Improvements to Support Cumulative Traffic Growth 56

Table 5-5 Cumulative (2030) Freeway Segment Level of Service 57

EXECUTIVE SUMMARY

This study documents the anticipated traffic impacts associated with the Holly Sugar Sports Spark Project in Tracy, California.

The Project would include the development of an active sports park complex that would contain the following facilities:

- 14 soccer fields of various sizes
- 18 baseball fields of various sizes
- 5 softball fields
- 4 football fields
- 3,500-seat football/soccer stadium

In addition to the active sports park, the Project would also develop a future expansion area that would contain potential land uses such as a BMX park, skate park, recreational center, library, and a paintball course. An area designated for passive-recreation activities is also planned on the site.

The traffic study includes an analysis of 12 intersections and 4 freeway segments that could potentially be impacted by traffic generated by the project. Intersection impacts are identified for the Near-Term (2015) and Cumulative (2030) scenarios. Intersection and freeway operations are assessed using 2000 HCM methodologies. Intersection impacts for study intersections within City of Tracy city limits are assessed using City of Tracy significance criteria, which set the LOS threshold at LOS C for intersections more than ¼ mile from a freeway or LOS D or better for those within ¼ mile of a freeway. Intersection impacts for study intersections in unincorporated areas of San Joaquin County are assessed using San Joaquin County significance criteria, which set the LOS threshold at LOS D. Freeway impacts were assessed using San Joaquin County Congestion Management Program significance criteria, which set the LOS threshold at LOS D.

This analysis also considers project impacts on pedestrians, bicyclists, transit, site access, on-site circulation, parking supply adequacy, and construction traffic impacts.

STUDY AREA

The following twelve intersections were analyzed during the weekday evening PM (when traffic volumes on surrounding roadways are highest) and Saturday afternoon (when sports park traffic is highest) peak period to determine if the proposed project would have any significant traffic impacts on the surrounding roadway network:

1. Larch Road/Corral Hollow Road
2. West Valley Mall/Corral Hollow Road
3. Grant Line Road/Corral Hollow Road
4. Larch Road/Tracy Boulevard
5. I-205 Westbound Ramps/Tracy Boulevard
6. I-205 Eastbound Ramps/Tracy Boulevard
7. Grant Line Road/Tracy Boulevard
8. Larch Road/Holly Drive
9. Grant Line Road/Holly Drive
10. Eleventh Street/Corral Hollow Road
11. Eleventh Street/Tracy Boulevard
12. Eleventh Street/Holly Drive

All study intersections listed above are in Tracy city limits except the Larch Road/Corral Hollow Road intersection, which is under the jurisdiction of San Joaquin County.

Operating conditions along the following freeway segments were also analyzed in the study:

- I-205 from Grant Line Road to Tracy Boulevard
- I-205 from Tracy Boulevard to MacArthur Drive

EXISTING CONDITIONS

Freeway access to the area is provided by Interstate 205 (I-205). The primary surface streets serving the area include Corral Hollow Road, Tracy Boulevard, Grant Line Road, Holly Drive, and Eleventh Street.

Based on traffic counts collected in 2008 and 2009 all of the study intersections operate at acceptable conditions, except the following:

- Grant Line Road/Tracy Boulevard operates at LOS D during the PM and Saturday peak hours
- Eleventh Street/Corral Hollow Road operates at LOS D during the PM and Saturday peak hours
- Eleventh Street/Tracy Boulevard operates at LOS D during the PM peak hour

All freeway study segments also operate acceptably under Existing Conditions.

PROJECT TRANSPORTATION CHARACTERISTICS

The proposed project is expected to generate 310 PM peak hour trips and 1,820 Saturday peak hour trips under Near-Term (2015) Conditions when the active sports park is constructed. Under Cumulative (2030) Conditions the proposed project is expected to generate 594 PM peak hour trips and 2,162 Saturday peak hour trips when the site is built out.

NEAR-TERM (2015) PLUS PROJECT OPERATIONS ANALYSIS

Intersection Analysis

The Near-Term Conditions intersection analysis considered no road improvement projects. The project will have two intersection impacts under this scenario:

Larch Road/Corral Hollow Road (Intersection #1)

The addition of project traffic would cause the westbound approach of the Larch Road/Corral Hollow Road intersection to degrade from LOS B to LOS E, as well as cause the intersection to meet the peak hour signal warrant. This is a significant impact.

> Mitigation 1: The following mitigation measures would improve operations at the Larch Road/Corral Hollow Road intersection to an acceptable level:
>
> - Widen the westbound approach to provide a shared left-turn/through lane and a right-turn lane. Or
> - Install traffic signal. Optimize signal timings to allow for split eastbound and westbound signal phasing. An evaluation of all applicable signal traffic warrants should be

conducted and additional factors (e.g., congestion, approach conditions, driver confusion) should be considered before the decision to install a signal is made.

The study intersection is under San Joaquin County jurisdiction. The City of Tracy would be responsible for the intersection improvement, acquisition of right-of-way, administering a Finance and Implementation Plan, and the construction. However, the County of San Joaquin would need to approve the design and construction of proposed intersection improvements.

Significance After Mitigation: Significant and unavoidable if the County does not approve proposed improvements. Less then significant if the County approves the proposed improvements. The intersection would operate at LOS C with 16 seconds of delay for the westbound approach during the PM peak hour and at LOS D with 25 seconds of delay for the eastbound approach during the Saturday peak hour as a side-street stop controlled intersection. If the intersection becomes signalized, it would operate at LOS B during the PM and Saturday peak hours, with 13 and 17 seconds of delay, respectively.

Larch Road/Tracy Boulevard (Intersection #4)

The addition of project traffic would cause the intersection of Larch Road/Tracy Boulevard to degrade from LOS B to LOS F during the Saturday peak hour, as well as cause the intersection to meet the peak hour signal warrant. This is a significant impact.

Mitigation 2: The following mitigation measures would improve operations at the Larch Road/Tracy Boulevard intersection to an acceptable level:

- Install traffic signal and optimize signal timings during the PM and Saturday peak hour. Optimization of traffic signal timings shall include determination of green time allocation for each intersection approach relative to the approach traffic volumes.

The proposed project would fund the improvements. The City of Tracy would be responsible for determining and administering a Finance and Implementation Plan.

Significance After Mitigation: Less then significant. The intersection would operate at LOS B with 14 seconds of average delay during the PM peak hour and at LOS D with 42 seconds of average delay during the Saturday peak hour.

Freeway Analysis

The Near-Term Conditions freeway analysis includes the I-205 widening from 4 lanes to 6 lanes east of Eleventh Street. As a result, the freeway operates acceptably with the project traffic and the project will not have any significant impacts on either of the freeway study segments.

CUMULATIVE (2030) PLUS PROJECT OPERATIONS ANALYSIS

Intersection Analysis

The Cumulative Conditions intersection analysis includes the Corral Hollow Road widening improvement project, all other study roadways were assumed not to be improved. As a result, the project will have five intersection impacts:

Larch Road/Corral Hollow Road (Intersection #1)

The intersection of Larch Road/Corral Hollow Road would operate at LOS F during the PM and Saturday peak hours under both Cumulative No Project and Cumulative Plus Project Conditions. This is a

significant impact because the project would increase the overall intersection volume by more then ten percent during the Saturday peak hour, in addition to meeting the peak hour traffic signal warrant.

Mitigation 3: The following mitigation measures would improve operations at the Larch Road/Corral Hollow Road intersection to an acceptable level:

- Provide intersection improvements needed to accommodate cumulative background growth; these improvements are listed in Table 5-4. The addition of project traffic would not require additional improvements, aside from those listed in Table 5-4, to meet the LOS D standard.

The City of Tracy as the project sponsor would be responsible for paying their fair share of the improvements. However, since the intersection is located in the County of San Joaquin it is under their jurisdiction. Therefore the City cannot assume the implementation of the mitigation measure. For this reason the impact would be significant and unavoidable.

The weekday PM and Saturday peak hour project traffic volume contributions at this intersection are:

	PM Peak Hour	Saturday Peak Hour
Existing Traffic	515	387
Project Traffic	162	677
Cumulative Background Growth	3,195	3,353

Significance After Mitigation: The intersection would operate at an acceptable LOS D during the PM and at Saturday peak hours with 42 and 43 seconds of average delay, respectively with the implementation of the mitigation measures. However, since the City cannot guarantee that the improvements would be constructed at an intersection outside its jurisdiction, the impact would be considered significant and unavoidable.

Larch Road/Tracy Boulevard (Intersection #4)

The intersection of Larch Road/Tracy Boulevard would operate at LOS F during the PM and Saturday peak hours under Cumulative No Project and Plus Project Conditions. This is a significant impact because the project would increase the overall intersection volume by more then ten percent during the weekday PM and Saturday peak hours, in addition to meeting the peak hour traffic signal warrant.

Mitigation 4: The following mitigation measures would improve operations at the Larch Road/Tracy Boulevard intersection to an acceptable level:

- Provide intersection improvements needed to accommodate cumulative background growth; these improvements are listed in Table 5-4. The addition of project traffic would require additional improvements, aside from those listed in Table 5-4, to meet the LOS D standard:
    - Widen the eastbound approach to provide one left-turn lane, two through lanes with a 400 foot receiving/acceleration lane on eastbound Larch Road, and a free-right turn lane.
    - Widen the northbound approach to provide two left-turn lanes, two through lanes with a 400 foot receiving/acceleration lane on northbound Tracy Boulevard, and a right-turn lane.

- Optimize signal timings.

The proposed project would fund its fair share of the improvements. The City of Tracy would be responsible for determining fair-share responsibilities and administering a Finance and Implementation Plan. The weekday PM and Saturday peak hour project traffic volume contributions at this intersection are:

	PM Peak Hour	Saturday Peak Hour
Existing Traffic	809	628
Project Traffic	454	1,920
Cumulative Background Growth	1,981	2,322

Significance After Mitigation: Less then significant. The intersection would operate at LOS C with 28 seconds of average delay during the PM peak hour and at LOS D with 51 seconds of average delay during the Saturday peak hour.

I-205 Westbound Ramps/Tracy Boulevard (Intersection #5)

The intersection of I-205 westbound Ramps/Tracy Boulevard would operate at LOS E during the PM and Saturday peak hour under Cumulative No Project Conditions. With the addition of project traffic, the intersection would continue to operate at LOS E during the PM peak hour and would degrade to LOS F during the Saturday peak hour. This is a significant impact because the project would increase the average intersection control delay by more then four seconds during the PM and Saturday peak hours.

Mitigation 5: The following mitigation measures would improve operations at the I-205 westbound Ramps/Tracy Boulevard intersection to an acceptable level:

- Widen northbound approach to provide a second left-turn lane
- Widen westbound approach to provide one left-turn lane, one shared through/left-turn lane, and one free right-turn lane

The proposed project would fund its fair share of improvements. The City of Tracy would be responsible for determining fair-share responsibilities and administering a Finance and Implementation Plan. The weekday PM and Saturday peak hour project traffic volume contributions at this intersection are:

	PM Peak Hour	Saturday Peak Hour
Existing Traffic	1,343	1,310
Project Traffic	371	1,775
Cumulative Background Growth	1,647	1,970

Significance After Mitigation: Less then significant. The intersection would operate at LOS B with 20 seconds of average delay during the PM peak hour and at LOS C with 33 seconds of average delay during the Saturday peak hour.

I-205 Eastbound Ramps/Tracy Boulevard (Intersection #6)

The intersection of I-205 eastbound Ramps/Tracy Boulevard would operate would operate at LOS F during the PM and Saturday peak hours under Cumulative No Project and Cumulative Plus Project

Conditions. This is a significant impact because the project would increase the average intersection control delay by more then four seconds during the PM and Saturday peak hours.

Mitigation 6: The following mitigation measures would improve operations at the I-205 eastbound Ramps/Tracy Boulevard intersection to an acceptable level:

- Widen northbound approach to provide a two through lanes and a right-turn lane
- Widen southbound approach to provide two through lanes and two left-turn lanes
- Widen eastbound approach to provide one left-turn lane, one shared right-through lane, and one right-turn lane

The proposed project would fund its fair share of improvements. The City of Tracy would be responsible for determining fair-share responsibilities and administering a Finance and Implementation Plan. The weekday PM and Saturday peak hour project traffic volume contributions at this intersection are:

	PM Peak Hour	Saturday Peak Hour
Existing Traffic	1,557	1,577
Project Traffic	339	985
Cumulative Background Growth	1,793	1,903

Significance After Mitigation: Less then significant. The intersection would operate at LOS C with 20 seconds of average delay during the PM peak hour and at LOS D with 45 seconds of average delay during the Saturday peak hour.

Larch Road/Holly Drive (Intersection #8)

The eastbound approach of the intersection of Larch Road/Holly Drive would operate at LOS D during the PM peak hour and at LOS C during the Saturday peak hour under Cumulative No Project Conditions. With the addition of project traffic, the eastbound approach operates at LOS F. This is a significant impact because the project would degrade the service level from LOS D to LOS F in the PM peak hour and LOS C to LOS F during the Saturday peak hour. The intersection also satisfies the peak hour signal warrant under Cumulative No Project and Plus Project Conditions.

Mitigation 7: The following mitigation measures would improve operations at the Larch Road/Holly Drive intersection to an acceptable level:

- Install traffic signal and optimize signal timings during the PM and Saturday peak hour. Optimization of traffic signal timings shall include determination of green time allocation for each intersection approach relative to the approach traffic volumes.

The proposed project would fund its fair share of improvements. The City of Tracy would be responsible for determining fair-share responsibilities and administering a Finance and Implementation Plan. The weekday PM and Saturday peak hour project traffic volume contributions at this intersection are:

	PM Peak Hour	Saturday Peak Hour
Existing Traffic	341	207
Project Traffic	83	145
Cumulative Background Growth	719	743

Significance After Mitigation: Less then significant. The intersection would operate at LOS A during the PM and at Saturday peak hours with 9 and 10 seconds of average delay, respectively.

Freeway Analysis

The Cumulative Conditions freeway analysis includes the I-205 widening from 6 lanes to 8 lanes. As a result, I-205 operates acceptably in the westbound direction with the project traffic and the project will not have any significant impacts on either of the westbound freeway study segments. The eastbound I-205 study segments operate at an unacceptable LOS E during the PM and Saturday peak hours under Cumulative No Project and Cumulative Plus Project Conditions. Even though the project would add traffic to the eastbound I-205 study segments, the added project traffic would not increase the baseline volume by more then five percent; therefore, project impacts at the eastbound freeway study segments would be less then significant.

SITE ACCESS AND ON-SITE CIRCULATION

The safety and efficiency of the project design features, including access and circulation for vehicles and bicycles, pedestrian on-site circulation, and emergency vehicle access were analyzed.

The access and circulation system for the active sports park is generally acceptable for vehicles, but fails to provide adequate pedestrian and bicycle facilities. The following recommended improvements should be considered during the project review:

- The project applicant should consider designing the project driveway intersection at Tracy Boulevard to accommodate future traffic signal installation
- The project applicant should consider designing the project driveway intersection at Corral Hollow Road to accommodate one through lane and one right-turn lane at the northbound approach to allow more efficient access into the site from Corral Hollow Road.
- Maintain landscaping in areas near driveways to a height of less than 2 feet and tree braches trimmed to heights greater than 6 feet to provide sight distance visibility for drivers.
- The project applicant should consider providing an additional emergency vehicle access point on Corral Hollow Road adjacent to the future expansion area.
- The project applicant shall provide sidewalks along project site frontage on Tracy Boulevard and Corral Hollow that extend to Larch Road. In addition, pedestrian access points that provide direct access to the active sports park, future expansion area, and the passive-recreation area should be provided on Tracy Boulevard and Corral Hollow Road.
- The project applicant shall provide a Class III bike route along Tracy Boulevard that would connect to the planned Class III bike route at Clover Road. The recommended Class III route would also provide access to the existing Class III route on Larch Road, east of Tracy Boulevard.

- The project applicant should consider providing some transit facilities such as bus pull outs or future bus stop locations to accommodate transit operations if service is extended to the project site in the future.

- It is recommended that the site plan either be redesigned to eliminate dead end aisles or that a vehicle turnaround be provided.

- The project applicant should consider providing sidewalks along both sides of the major east-west internal roadway to provide direct and efficient pedestrian access across the project site. Sidewalk width is recommended to be at least 5-feet. American with Disabilities Act (ADA) compliant curb ramps must also be provided along the sidewalk curbs.

- The project applicant should consider providing pedestrian crossing treatments across the drive aisles, as shown on Figure 6-1.

- The project applicant shall provide pedestrian access between the active sports park and the passive-recreation and future expansion areas via paved pedestrian/bicycle paths.

- The project applicant shall provide Class II bicycle lanes on both sides of the major east-west internal roadway. The Class II lane should be a maximum width of 5-feet with a maximum gutter span of 2-feet. The roadway is recommended to be designed with a maximum grade of 5% to allow for a pleasant user experience. Or

  The project applicant shall provide a Class I pedestrian/bike path through the active sports park area with connections to potential Class I paths on the passive-recreation or future-expansion areas.

- The project applicant shall provide bicycle access between the active sports park and the passive-recreation and future expansion areas via paved pedestrian/bicycle paths.

PROJECT PARKING SUPPLY AND DEMAND

City Code requirements nor ITE parking demand rates were available to determine if the parking supply would be adequate for the anticipated parking demand. Using engineering judgment the Saturday peak hour parking demand was estimated to be about 1,148 parking spaces. The site plan provides a total of 2,931 parking stalls, which is more then enough to accommodate the estimated Saturday peak hour parking demand.

The site however did fail to meet City Code standards regarding bicycle parking. City Code requires that the project provide bicycle parking stalls that total five percent of the number of provided auto spaces. The site provides no bicycle facilities on site. This is considered a potentially significant impact. The following is recommended to address the issue of bicycle parking

- The project applicant shall provide bicycle parking spaces at each of the surface parking lots that equate to five percent of the number of provided vehicle parking spaces. Overall, the site should provide a total of at least 147 parking spaces. Bicycle parking stalls should conform to City Code design standards and should be located near the sport field facilities.

CONSTRUCTION TRAFFIC

Due to the size and amount of work that will be required to construct the project, it is expected that construction related traffic could negatively impact vehicular flow along Tracy Boulevard and Corral Hollow Road. To mitigate any construction related impacts, Fehr & Peers recommends preparing and implementing construction traffic management plans for the proposed project.

CHAPTER 1. INTRODUCTION

This report presents the findings, conclusions, and recommendations of the transportation impact analysis conducted for the proposed Holly Sugar Sports Park project in the City of Tracy. The purpose of the transportation impact analysis is to identify impacts of the proposed sports park on the surrounding transportation system and to recommend measures to mitigate significant impacts. Since most of the travel to the sports park will be via private vehicles, potential impacts to roadway system are a large component of the analysis. A project phasing analysis was also performed to determine the amount of development that can be built on the sports park without creating significant impacts on the surrounding roadway network under Near-term (2015) Conditions. This chapter provides an overview of the project, identifies the study area, describes the analysis scenarios, and discusses the analysis methods and significance standards.

1.1 PROJECT DESCRIPTION

The project site is currently vacant and consists of approximately 298 acres of land located between Tracy Boulevard and Corral Hollow Road north of Larch Road, and southwest of Sugar Road. The Project site and study area are shown on Figure 1-1. Based on a project description and site plan dated November 5, 2008, the proposed project would comprise three areas: a 166-acre active sports park, an 86-acre passive recreation area, and a 46-acre future expansion area (sizes are approximate).The active sports park area would consist of the following facilities:

- 14 soccer fields of various sizes
- 18 baseball fields of various sizes
- 5 softball fields
- 4 football fields
- 3,500-seat football/soccer stadium
- 4 children's play areas

As shown in Figure 1-1, the passive recreation area will mainly serve as a buffer zone between the active sports park and the residential community on Larch Road. This area may be used for passive recreational activities such as walking and biking trails, disc golf, and/or an arboretum.

The future expansion area is anticipated to contain the following facilities:

- Recreational center
- Library
- Skate park
- BMX park
- Spray park
- Bocce ball courts
- Paintball course
- Hard courts and unmarked athletic fields

The project is expected to be constructed in phases. The active sports park will be constructed first with an anticipated completion date of 2015; the passive recreation and future expansion areas are assumed to be constructed by 2030.

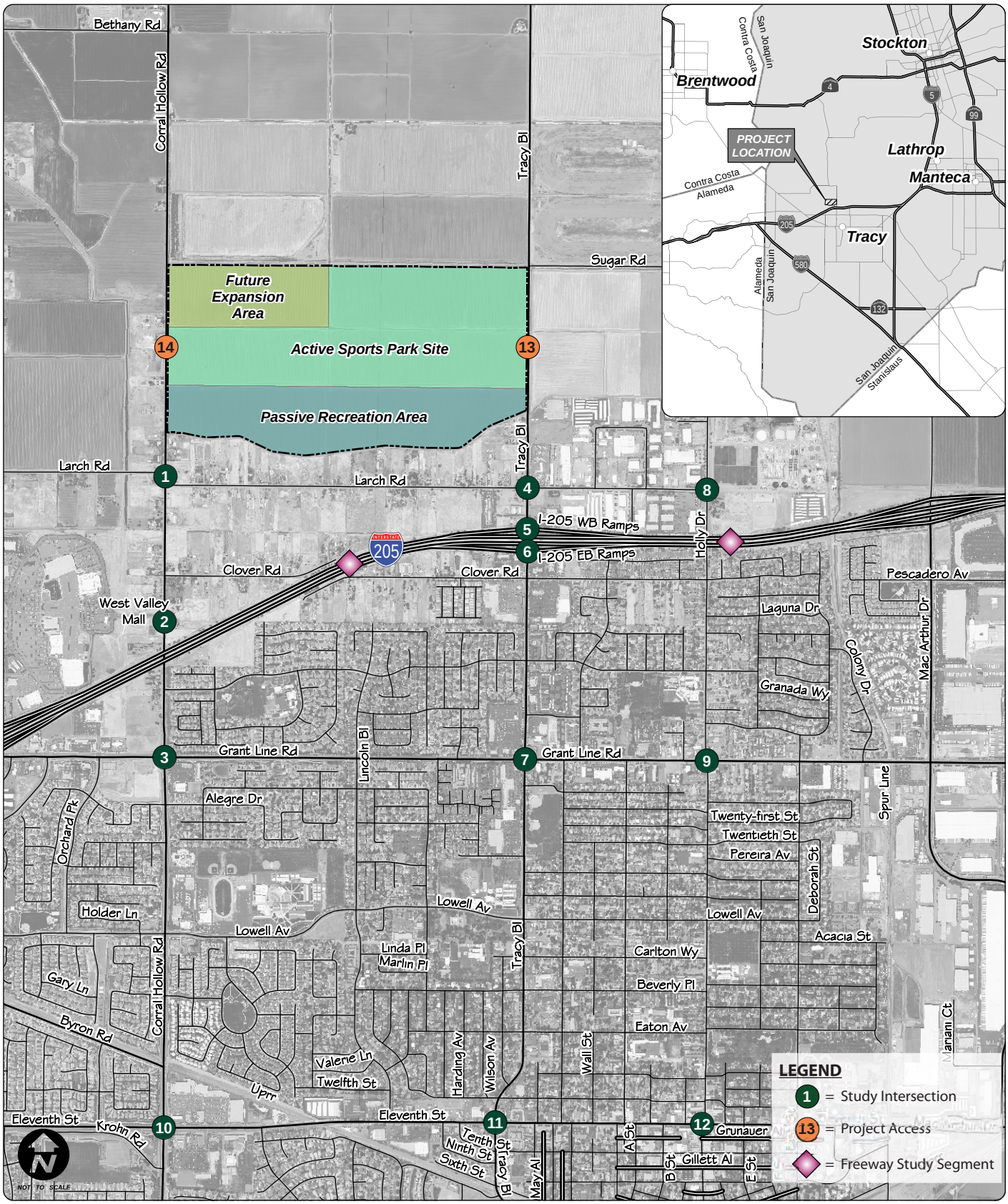

Holly Sugar Sports Park EIR

FEHR & PEERS
TRANSPORTATION CONSULTANTS

May 2009
Graphics\Report Graphics\WC08-2605_1-1

PROJECT SITE VICINITY AND STUDY LOCATIONS

FIGURE 1-1

1.2 STUDY AREA

This study focuses on the operations of key intersections and freeway segments in the vicinity of the site during the weekday evening peak commute period (when traffic volumes on the surrounding roadways are highest) and during the Saturday midday peak period, when traffic generated by the sports park is highest. Intersections with potential impacts were selected based on the amount of traffic projected to be added by the sports park. The study intersections and freeway segments were selected with input from City staff.

1.2.1 Study Intersections

The study intersections listed below were chosen in consultation with City of Tracy staff. The locations of these intersections are shown on Figure 1-1 and represent the locations most likely to experience traffic impacts associated with the Project.

1. Larch Road/Corral Hollow Road
2. West Valley Mall/Corral Hollow Road
3. Grant Line Road/Corral Hollow Road
4. Larch Road/Tracy Boulevard
5. I-205 Westbound Ramps/Tracy Boulevard
6. I-205 Eastbound Ramps/Tracy Boulevard
7. Grant Line Road/Tracy Boulevard
8. Larch Road/Holly Drive
9. Grant Line Road/Holly Drive
10. Eleventh Street/Corral Hollow Road
11. Eleventh Street/Tracy Boulevard
12. Eleventh Street/Holly Drive

All study intersections listed above are in Tracy city limits except the Larch Road/Corral Hollow Road intersection, which is under the jurisdiction of San Joaquin County.

1.2.2 Freeway Study Segments

Operating conditions along the following freeway segments were also analyzed in the study:

- I-205 from Grant Line Road to Tracy Boulevard
- I-205 from Tracy Boulevard to MacArthur Drive

1.3 ANALYSIS SCENARIOS

The operations of the study intersections and freeway segments were evaluated for the following five scenarios:

Scenario 1: Existing Conditions – Existing Conditions were established using traffic counts collected in 2008 and 2009.

Scenario 2: Near-Term No Project Conditions – This scenario contains growth generated from approved City of Tracy development projects. The Tracy General Plan traffic model was used to estimate the increment of added traffic generated by these projects, which was added to the existing volumes to develop Near-Term No Project traffic forecasts.

Scenario 3: Near-Term Plus Project Conditions – Near-term plus Project traffic forecasts were developed by adding the project-generated traffic to traffic forecasts for Scenario 2.

Scenario 4: Cumulative No Project Conditions – Cumulative No Project traffic forecasts were developed using the Tracy General Plan Traffic Model. For this scenario, growth to year 2030 in the City of Tracy was assumed to occur consistent with General Plan policies.

Scenario 5: Cumulative Plus Project Conditions – Cumulative plus Project traffic forecasts were developed by adding the project-generated traffic to traffic forecasts for Scenario 4.

1.4 ANALYSIS METHODS

The operational performance of a roadway network is commonly described with the term level of service or LOS. LOS is a qualitative description of operating conditions, ranging from LOS A (free-flow traffic conditions with little or no delay) to LOS F (oversaturated conditions where traffic flows exceed design capacity, resulting in long queues and delays). The LOS analysis methods outlined in the *Highway Capacity Manual* (Transportation Research Board, 2000) were used in this study. The HCM methods for calculating LOS for signalized intersections, unsignalized intersections, and freeway segments are described below.

1.4.1 Signalized Intersections

Traffic operations at signalized intersections are evaluated using the LOS method described in Chapter 16 of the 2000 *Highway Capacity Manual*. A signalized intersection's LOS is based on the weighted average control delay measured in seconds per vehicle. Control delay includes initial deceleration delay, queue move-up time, stopped delay, and final acceleration. Table 1-1 summarizes the relationship between the control delay and LOS for signalized intersections.

TABLE 1-1
SIGNALIZED INTERSECTION LOS CRITERIA

Level of Service	Description	Average Control Delay (Seconds)
A	Operations with very low delay occurring with favorable traffic signal progression and/or short cycle lengths.	≤ 10.0
B	Operations with low delay occurring with good progression and/or short cycle lengths.	> 10.0 to 20.0
C	Operations with average delays resulting from fair progression and/or longer cycle lengths. Individual cycle failures begin to appear.	> 20.0 to 35.0
D	Operations with longer delays due to a combination of unfavorable progression, long cycle lengths, or high V/C ratios. Many vehicles stop and individual cycle failures are noticeable.	> 35.0 to 55.0
E	Operations with high delay values indicating poor progression, long cycle lengths, and high V/C ratios. Individual cycle failures are frequent occurrences. This is considered to be the limit of acceptable delay.	> 55.0 to 80.0
F	Operations with delays unacceptable to most drivers occurring due to over-saturation, poor progression, or very long cycle lengths.	> 80.0

Source: *Highway Capacity Manual*, Transportation Research Board, 2000.

1.4.2 Unsignalized Intersections

In Chapter 17 of the Transportation Research Board's 2000 *Highway Capacity Manual*, the LOS for unsignalized intersections (side-street or all-way stop controlled intersections) is also defined by the average control delay per vehicle (measured in seconds). The control delay incorporates delay associated with deceleration, acceleration, stopping, and moving up in the queue. For side-street stop-controlled intersections, delay is calculated for each stop-controlled movement and for the uncontrolled left turns, if any, from the main street. The delay and LOS for the intersection as a whole and for the worst movement are reported for side-street stop intersections. The intersection average delay is reported for all-way stop intersections. Table 1-2 summarizes the relationship between delay and LOS for unsignalized intersections. The delay ranges for unsignalized intersections are lower than for signalized intersections as drivers expect less delay at unsignalized intersections.

TABLE 1-2
UNSIGNALIZED INTERSECTION LOS CRITERIA

Level of Service	Description	Average Control Delay Per Vehicle (Seconds)
A	Little or no delays	≤ 10.0
B	Short traffic delays	> 10.0 to 15.0
C	Average traffic delays	> 15.0 to 25.0
D	Long traffic delays	> 25.0 to 35.0
E	Very long traffic delays	> 35.0 to 50.0
F	Extreme traffic delays with intersection capacity exceeded	> 50.0

Source: *Highway Capacity Manual* (Transportation Research Board, 2000).

1.4.3 Freeway Segments

Similar to intersection operations, freeway levels of service range from LOS A (the best operating conditions) to LOS F (the worst). LOS E represents "at-capacity" operation. When the volume exceeds capacity, stop-and-go conditions result, and operations are designated as LOS F. The HCM method calculates a density for a freeway segment using input data such as the traffic volume, the number of lanes, the percentage of trucks and the free-flow speed. Based on the calculated density, each segment of the freeway can be assigned a level of service. The LOS for a freeway segment is based on the vehicle density (passenger cars/lane/mile) as shown in Table 1-3.

TABLE 1-3
FREEWAY MAINLINE LEVEL OF SERVICE DEFINITIONS

Level of Service[1]	Maximum Density (Passenger Cars/Lane/Mile)
A	11
B	18
C	26
D	35
E	45
F	> 45

Notes:
1. Freeway mainline LOS based on a 65 mph free-flow speed.
Source: *Highway Capacity Manual* (Transportation Research Board, 2000).

1.5 TRANSPORTATION POLICIES

As described previously, level of service is a measure of the level of congestion ranging from LOS A to LOS F. Most cities and counties in California have established LOS standards of significance for intersections and other roadway facilities within their limits. Caltrans also has LOS standards for their facilities. The applicable city, county, and Caltrans policies for this analysis are:

1.5.1 City of Tracy

Policy 1. To the extent feasible, the City shall strive for LOS C on all streets and intersections, except as follows:

- LOS D shall be allowed on streets and at intersections within one-quarter (1/4) mile of any freeway. This lower standard is intended to discourage inter-regional traffic from using Tracy streets.
- LOS E shall be allowed in the Downtown and Bowtie area of Tracy.

Policy 2. The City may allow individual locations to fall below the City's LOS standards in instances where the construction of physical improvements would be infeasible, prohibitively expensive, significantly impact adjacent properties or the environment, or have a significant adverse effect on the character of the community.

Policy 3. Intersections may be permitted to fall below their adopted LOS standard on a temporary basis when the improvements necessary to preserve the LOS standard are in the process of construction or have been designed and funded but not yet constructed.

Policy 5. For project-specific development approvals, the LOS at major street intersections shall be determined based on the direct estimation of peak hour conditions and should reflect the average condition prevailing throughout the peak hour of a typical weekday for all traffic using the intersection.

The City of Tracy General Plan also includes the following policies regarding pedestrian and bicycle facilities:

Policy 6. New development shall include pedestrian and bicycle facilities internal to the development and that connect to city-wide facilities, such as parks, schools and recreational corridors.

Policy 7. New development sites for commercial, employment, educational, recreational and park-and-ride land uses shall provide bicycle parking and/or storage facilities.

1.5.2 County of San Joaquin

The San Joaquin County Congestion Management Plan (CMP), a state-mandated program, is a mechanism employing growth management techniques, including traffic level of service requirements, development mitigation programs, transportation systems management, and capital improvement programming, for the purpose of controlling and/or reducing the cumulative regional impacts of development. The following provisions of the CMP are relevant to the proposed project:

- The CMP system includes Interstate 205, Interstate 580, Interstate 5, Eleventh Street and Tracy Boulevard.
- LOS thresholds for local freeways are set at "D," except that on I-580/I-205 between the Alameda County Line and Tracy Boulevard, LOS "F" is permissible, and on I-205 between Tracy Boulevard and I-5, LOS "E" is permissible.

The service level standard for intersections in unincorporated areas of San Joaquin County is LOS D.

1.5.3 Caltrans

According to Caltrans' *Guide for the Preparation of Traffic Impact Studies,* Caltrans attempts to maintain a target LOS at the transition between LOS C and LOS D on State highway facilities. In areas where the LOS C or D standard is not feasible, the lead agency in that area should consult with Caltrans to determine the appropriate LOS target. For existing State highway facilities that operate at a less than appropriate target service level, the existing measure of effectiveness (i.e. density for freeways) should be maintained.

1.5.4 Significance Criteria

Near-term project impacts were evaluated by comparing the results of Scenario 3 to Scenario 2, and Cumulative project impacts were evaluated by comparing the results of Scenario 5 to Scenario 4. A traffic and circulation impact is considered significant if implementation of the Project would cause:

- Freeway segment operations to degrade from an acceptable level (LOS D or better) to an unacceptable level (LOS E or F) using CMP standards or an increase in volume greater than 5 percent for a freeway segment operating at an unacceptable level.[1]
- Signalized intersection operations to degrade from an acceptable level based on City of Tracy standards (LOS C or better for intersections more than ¼ mile from a freeway or LOS D or better

[1] Freeway LOS thresholds for determining CEQA impacts may be based on locally adopted standards, such as CMP standards, or Caltrans standards. The Caltrans LOS standard is LOS C, or the existing density if current operations are worse than LOS C. The study segments of I-205 have CMP thresholds of LOS E and LOS F, based on their operations when the CMP legislation was adopted. However, this segment is currently being widened. Therefore, the overall CMP standard of LOS D is the threshold used for this analysis.

for those within ¼ mile of a freeway) to an unacceptable level, or a delay increase of more than 4 seconds for an intersection operating at an unacceptable level.

- Unsignalized Tracy intersection operations to:
    - degrade from an acceptable level based on City of Tracy standards (LOS C or better for intersections more than ¼ mile from a freeway or LOS D or better for those within ¼ mile of a freeway) to an unacceptable level, and a traffic signal warrant to be met, or
    - a volume increase of more than 10 percent to an intersection operating at an unacceptable level and meeting a traffic signal warrant
- Unsignalized County intersection operations to:
    - degrade from an acceptable level based on County of San Joaquin standards (LOS D or better) to an unacceptable level (LOS E or F), and a traffic signal warrant to be met, or
    - a volume increase of more than 5 percent to an intersection operating at an unacceptable level and meeting a traffic signal warrant
- An inadequate parking capacity
- Inadequate emergency access
- Any conflicts with adopted policies, plans or programs supporting alternative transportation

CHAPTER 2. SETTING

This chapter describes the transportation system in the project study area and the existing roadway system's traffic operations.

2.1 PROJECT LOCATION

The proposed project is located just north of the City limits of Tracy, California. The City of Tracy is located in southwest San Joaquin County, east of the San Francisco Bay Area and west of the cities of Manteca and Lathrop. The project site is located between Tracy Boulevard and Corral Hollow Road north of Larch Road, and south of Sugar Road. The project site is bounded by Corral Hollow Road to the west, Tracy Boulevard to the east, rural residential developments to the south, and agricultural land to the north.

2.2 STUDY AREA ROADWAYS

Regional access to the study area is provided by I-205 while local access to the project site is provided via Corral Hollow Road and Tracy Boulevard. Other roadways in the study area include Grant Line Road, Eleventh Street, Larch Road and Holly Drive. The roadways in the study area are described below and their locations in relation to the site are shown on Figure 1-1.

Interstate 205 provides regional access to Tracy. This freeway extends between I-580 and I-5 and runs east-west through the northern portion of the City of Tracy. Interchanges are provided at West Eleventh Street, Grant Line Road, Tracy Boulevard and MacArthur Drive. West of Eleventh Street, I-205 has six lanes (three lanes in each direction). The remaining sections of I-205 have two lanes in each direction. Construction is currently underway to widen I-205 to three lanes in each direction east of Eleventh Street. The posted speed limit on I-205 is 70 miles per hour east of Tracy and 65 miles per hour through Tracy and to the west.

Tracy Boulevard is a north-south arterial that extends from State Route 4 in the north to I-580 in the south. In the study area, Tracy Boulevard is a two-lane roadway north of Larch Road and a four-lane roadway south of Larch Road, with a posted speed limit that varies between 30 and 35 miles per hour. I-205 access is provided by a diamond interchange at Tracy Boulevard. This roadway also intersects Larch Road, Grant Line Road and Eleventh Street.

Corral Hollow Road is a north-south arterial that extends from the San Joaquin/Alameda County border south of I-580 to north of I-205. In the study area, Corral Hollow Road is a two-lane roadway north of Grant Line Road and a four-lane roadway south of Grant Line Road, with a posted speed limit that varies between 35 and 40 miles per hour. This roadway also serves as a major truck route leading to nearby aggregate mining operations.

Grant Line Road is an east-west arterial with posted speed limit varying between 35 and 40 miles per hour through the study area. To the west, it crosses the San Joaquin/Alameda County line into Alameda County. In the study area, it intersects with Corral Hollow Road, Tracy Boulevard and Holly Drive. To the east, it terminates at Eleventh Street. In the study area, Grant Line Road has two lanes in each direction east of Corral Hollow Road and three lanes in each direction between Corral Hollow Road and Naglee Road. I-205 access is provided by an interchange at Grant Line Road.

Eleventh Street is a four- to six-lane east-west expressway/arterial that originates from I-205 in the west, passes through the City of Tracy, and terminates at I-5 south of the I-205/I-5 junction. Eleventh Street provides direct access to the City of Tracy from Alameda County and the San Francisco Bay Area. In the

study area, Eleventh Street intersects Corral Hollow Road, Tracy Boulevard and Holly Drive. The posted speed limit varies between 30 and 45 miles per hour.

Larch Road is an east-west two-lane rural road that extends between Holly Drive to the east and Naglee Road to the west. In the study area, it intersects with Corral Hollow Road, Tracy Boulevard and Holly Drive. The posted speed limit varies between 25 and 35 miles per hour on Larch Road.

Holly Drive is a two-lane north-south collector that extends from Sugar Road in the north to Eleventh Street in the South and continues as Central Avenue south of Eleventh Street. In the study area, it intersects with Larch Road, Grant Line Road and Eleventh Street. The posted speed limit on Holly Drive is 25 miles per hour.

2.3 EXISTING PEDESTRIAN AND BICYCLE FACILITIES

This section describes the existing pedestrian and bicycle facilities in the study area.

2.3.1 Pedestrian Facilities

Pedestrian facilities, such as sidewalks, crosswalks, and pedestrian signals, are absent in the areas surrounding the project site. In the study area, crosswalks and pedestrian signals are provided at all signalized study intersections except for the intersection of Corral Hollow Road and the West Valley Mall driveway. Sidewalks are provided at all study intersections except the intersections along Corral Hollow Road at Larch Road and the West Valley Mall driveway.

2.3.2 Bicycle Facilities

Bicycle facilities include the following:

- Bike paths (Class I) – Paved trails that are separated from roadways.
- Bike lanes (Class II) – Lanes on roadways designated for use by bicycles through striping, pavement legends, and signs.
- Bike routes (Class III) – Designated roadways for bicycle use by signs only; may or may not include additional pavement width for cyclists.

Currently, there are no bicycle facilities provided in the areas surrounding the immediate project site. The rural nature of the project site area roadways generally requires that bicycles share the roadways with motor vehicles.

Within the City limits, some Class I bikeway facilities exist. The longest continuous Class I bike path is located east of Corral Hollow Road and extends from West Eleventh Street to south of Valpico Road. A second Class I facility runs parallel to North MacArthur Drive and extends from East Eleventh Street to I-205. Class II bike lanes exist along portions of Corral Hollow Road, Tracy Boulevard, Grant Line Road and North MacArthur Drive. Class III bike routes exist along portions of Larch Road and Holly Drive. While bicycle facilities are located throughout the City, gaps in the existing bicycle network make it difficult to travel east-west or north-south through the City. Figure 2-1 displays the existing bicycle facilities within the City of Tracy.

2.4 EXISTING TRANSIT SERVICE

The public transit system includes both bus and rail passenger components. The bus and rail system provides local and regional connectivity to residents of Tracy. Figure 2-2 displays the existing transit system within the City of Tracy. Currently, there is no public transit system that serves the project site.

The bus system operating within the City of Tracy includes the following services:

- Local fixed-route bus service operated by the City of Tracy (Tracer)
- Local commuter-route bus service operated by the City of Tracy (Tracer)
- Regional intercity fixed-route bus service operated by the San Joaquin Regional Transit District (SJRTD)
- Flexible fixed-route service operated by SJRTD
- Commuter express bus service operated by SJRTD
- Regional passenger rail service operated by Altamont Commuter Express (ACE)

Fixed-route services are those that adhere to a strict route and timetable with scheduled stop locations. Flexible-route service is demand-responsive, whereby a driver may deviate from the route to pick up and drop off passengers. Some transit agencies, such as SJRTD, also operate flexible fixed-route service, whereby fixed-route services may temporarily deviate from the designated route for elderly and disabled passengers.

2.4.1 Local Fixed-Route Bus Service

The City of Tracy operates a fixed-route bus system within the City, called Tracer. Tracer operates Monday through Saturday, except on holidays, and provides the following three routes within the City of Tracy:

- **Route A** runs along Grant Line Road, MacArthur Drive, Tracy Boulevard, Corral Hollow Road and East Street. Destinations served include the Prime Outlets, City Hall and the West Valley Mall. Service is currently provided on 60-minute headways with operations from approximately 7:00 AM to 7:00 PM on weekdays and from 9:00 AM to 5:00 PM on Saturdays.
- **Route B** runs along Grant Line Road, Naglee Road, Tracy Boulevard, Corral Hollow Road, Lowell Avenue, Eaton Avenue and Holly Drive. Destinations served include City Hall, Sutter Tracy Community Hospital and the West Valley Mall. Service is currently provided on 60-minute headways with operations from approximately 7:00 AM to 7:00 PM on weekdays and from 9:00 AM to 5:00 PM on Saturdays.
- **Route C** runs along Tenth Street, Eleventh Street, Corral Hollow Road, Schulte Road, Tracy Boulevard and Central Avenue. Destinations served include City Hall and the Post Office. Service is currently provided on 60-minute headways with operations from approximately 7:00 AM to 7:00 PM on weekdays and from 9:00 AM to 5:00 PM on Saturdays.

2.4.2 Local Commuter-Route Bus Service

Tracer also provides two commuter routes (Route D and Route E) that follow a loop within the existing city limits on roadways that include Grant Line Road, Corral Hollow Road, Tracy Boulevard, Lowell Avenue, East Street, Central Avenue, Schulte Road and Sycamore Parkway. Destinations served on the

route include City Hall and many of the schools in Tracy. Both commuter routes travel the same roadways, but in opposite directions. Routes D and E operate two buses in the morning and in the afternoon from 6:50 to 8:00 AM and 3:00 to 4:00 PM, respectively.

2.4.3 Regional Intercity Fixed-Route Bus Service

The SJRTD operates one fixed-route bus line (Route 26) that serves the City of Tracy. This line connects the City of Tracy to Stockton and Lathrop along Interstate 5. Within the City of Tracy, Route 26 extends along Grant Line Road and East Street and provides service to locations such as Downtown Tracy on weekdays as well as Wal-Mart (south of Grant Line Road) and the West Valley Mall on the weekends. From Monday through Friday this route operates from 5:00 am to 9:30 pm with headways ranging between 120 and 145 minutes. On the weekends and holidays this route operates from 8:00 am to 6:00 pm on 150-minute headways.

2.4.4 SJRTD Flexible Fixed-Route Service

SJRTD also operates Route 90, which is a flexible fixed-route line. Within the City of Tracy, this route extends along Grant Line Road with stops at major locations such as Wal-Mart, West Valley Mall, the Naglee Park-and-Ride Facility (on Naglee Road at Grant Line Road), and the Prime Outlets on Pescadero Avenue. Route 90 operates Monday through Friday between 5:30 AM and 7:30 PM on 105-minute and 2-hour headways.

2.4.5 SJRTD Commuter Bus Service

The SJRTD operates a number of commuter bus lines that connect cities in San Joaquin County with major employment locations in the San Francisco Bay Area including Pleasanton, Dublin, Livermore, Mountain View, Palo Alto, and Sunnyvale. These routes pick up and drop off passengers at the Tracy Naglee Park-and-Ride facility. Pick-up times vary between 4:00 am and 6:00 am and drop-off times vary between 4:00 pm and 6:00 pm.

2.4.6 Altamont Commuter Express

Altamont Commuter Express (ACE) is a passenger rail service connecting Stockton to San Jose. Trains operate Monday through Friday, excluding holidays. The ACE station for Tracy is located on Tracy Boulevard at Linne Road. Four westbound ACE trains per day arrive in Tracy between 4:50 am and 10:00 am. Four eastbound trains return to Tracy between 1:40 pm and 7:10 pm.

2.5 EXISTING FREIGHT RAIL

The Union Pacific Railroad (UPRR) has two tracks that traverse Tracy in an east-west direction – one in the north (north of Valpico Road) and another in the south (north of Linne Road). UPRR is the largest railroad in North America with service in over 23 states. The freight lines through Tracy provide connectivity from the West Coast, including major ports such as Oakland, to all other areas of operation.

The main line runs through south Tracy along Linne Road. This line is used as both an industrial (10 freights per day) and commuter (via ACE train service) rail. The ACE station is also located on this line at the corner of Tracy Boulevard and Linne Road. The north line, with tracks that stop at the San Joaquin/Alameda County line, is no longer in service and is currently used only for storage.

2.6 EXISTING TRUCK ROUTES

The City of Tracy has a specific City ordinance relating to truck routes. This ordinance defines weight restrictions, specifies the circumstances under which trucks may enter areas not designated as truck routes, and defines the truck routes within the City.

The weight restrictions that apply to trucks are specified in Section 3.08.300 of the Tracy Municipal Code. This section of the code states that trucks larger than five tons must stay on designated truck routes. Passenger buses under the jurisdiction of the Public Utilities Commission are exempt from this restriction.

Section 3.08.300 also provides that trucks are allowed to temporarily deviate from the designated truck routes for purposes of loading and unloading. Otherwise, trucks should remain on the designated routes specified in Section 3.08.310 of the Tracy Municipal Code.

The designated truck routes in the City of Tracy are shown in Figure 2-3 and include:

- Arbor Road (MacArthur Drive to Holly Drive)
- Corral Hollow Road (Larch Road to I-580)
- Eleventh Street (west City limits to Tracy Blvd and MacArthur Drive to east City limits)
- Grant Line Road (west City limits to Corral Hollow Road and MacArthur Drive to east City limits)
- Holly Drive (Larch Road to Arbor Avenue)
- Lammers Road (Byron Road to Eleventh Street)
- Larch Road (west City limits to Holly Drive)
- Linne Road (east City limits to west City limits)
- MacArthur Drive (Arbor Avenue to Sixth Street and Valpico Road to Mount Diablo Avenue)
- Sixth Street (MacArthur Drive to Central Avenue)
- Tracy Boulevard (Larch Road to I-205 and Linne Road to south City limits)
- Valpico Road (Tracy Boulevard to MacArthur Drive)

I-205, I-580, and I-5 are also designated as truck routes by the State of California.

2.7 EXISTING DATA COLLECTION

Figure 1-1 shows the location of the proposed Project site and the study intersections. These intersections were selected in consultation with City of Tracy staff and are the locations that would most likely be affected by the proposed project.

Intersection turning movement and vehicle classification counts were collected from 4:00 to 6:00 pm on Thursday, December 4, 2008 and from 1:00 to 5:00 pm on Saturday, December 6, 2008 at study intersections 1 through 9. For the study intersections along Eleventh Street (10-12) turning movement and vehicle classification counts were collected from 4:00 to 6:00 pm on Tuesday, February 24, 2009 and from 1:00 to 5:00 pm on Saturday, February 21, 2009.

Mainline vehicle counts were also collected on I-205 at the Holly Drive over-crossing during the same days and peak periods as the intersection counts conducted in December 2008. Mainline volumes at other locations along I-205 were estimated by subtracting off-ramp volumes and adding on-ramp volumes. Based on the overall count volumes, it was determined that the global peak hour for the intersections and mainline occurred between 5:00 and 6:00 PM during the week, and between 3:30 and 4:30 PM on Saturday.

Field reconnaissance was also performed in which lane configurations, turn pocket lengths, speed limits, and signal phasing were collected. In addition, traffic signal timing data were collected for the signalized intersection from the City of Tracy and Caltrans. Intersection lane configurations and peak hour volumes are shown on Figure 2-3.

2.8 EXISTING INTERSECTION OPERATIONS

Existing operations were evaluated for the weekday PM and Saturday peak hours at the study intersections. Table 2-1 summarizes the intersection analysis results. As shown, all study intersections currently operate at acceptable service levels during the weekday PM and Saturday peak hours, except the following:

- Grant Line Road/Tracy Boulevard operates at LOS D during the PM and Saturday peak hours
- Eleventh Street/Corral Hollow Road operates at LOS D during the PM and Saturday peak hours
- Eleventh Street/Tracy Boulevard operates at LOS D during the PM peak hour

Detailed intersection LOS calculation worksheets are presented in Appendix B.

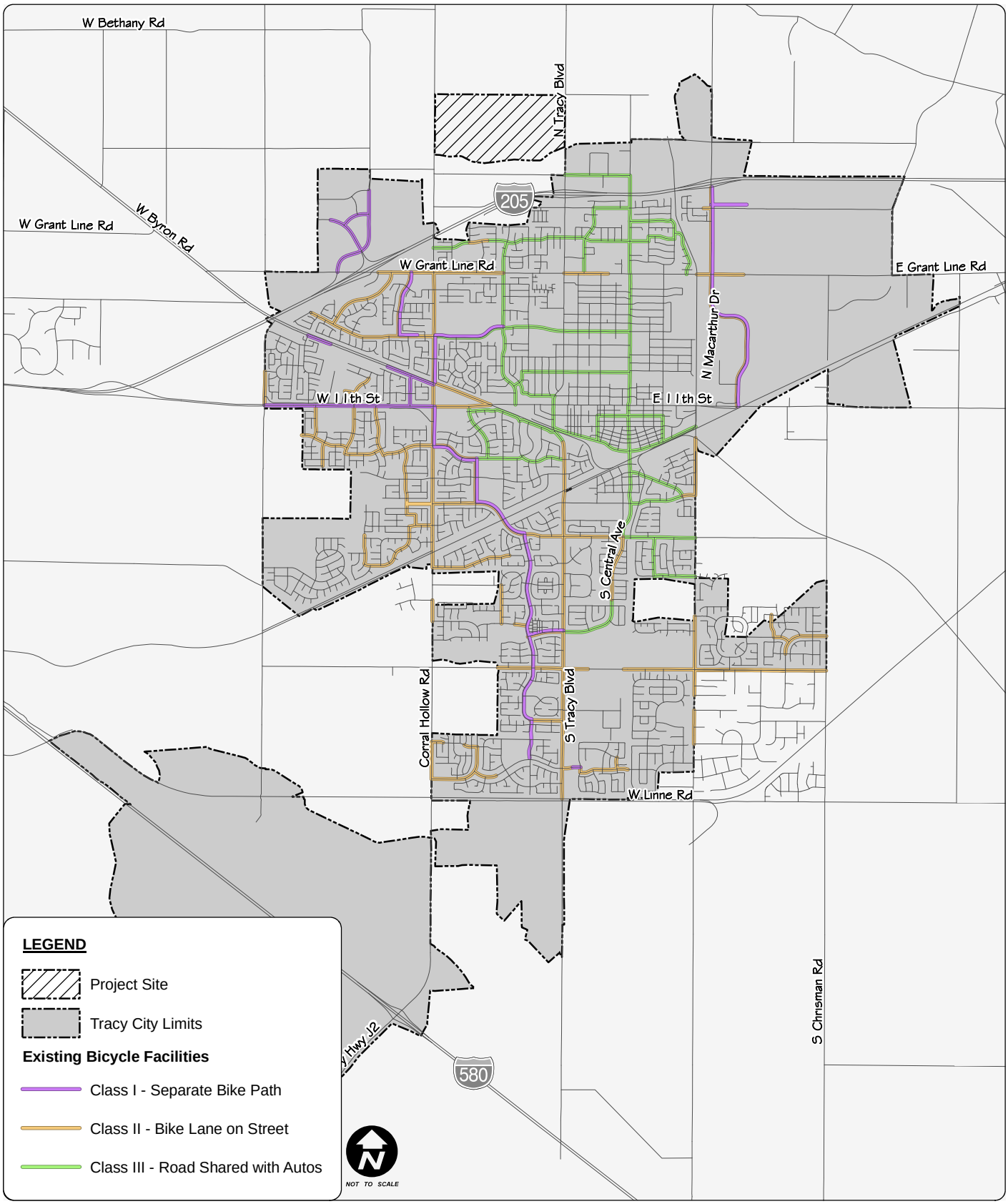

Holly Sugar Sports Park EIR

FEHR & PEERS
TRANSPORTATION CONSULTANTS

May 2009
WC08-2605_Bike

EXISTING BICYCLE FACILITIES

FIGURE 2-1

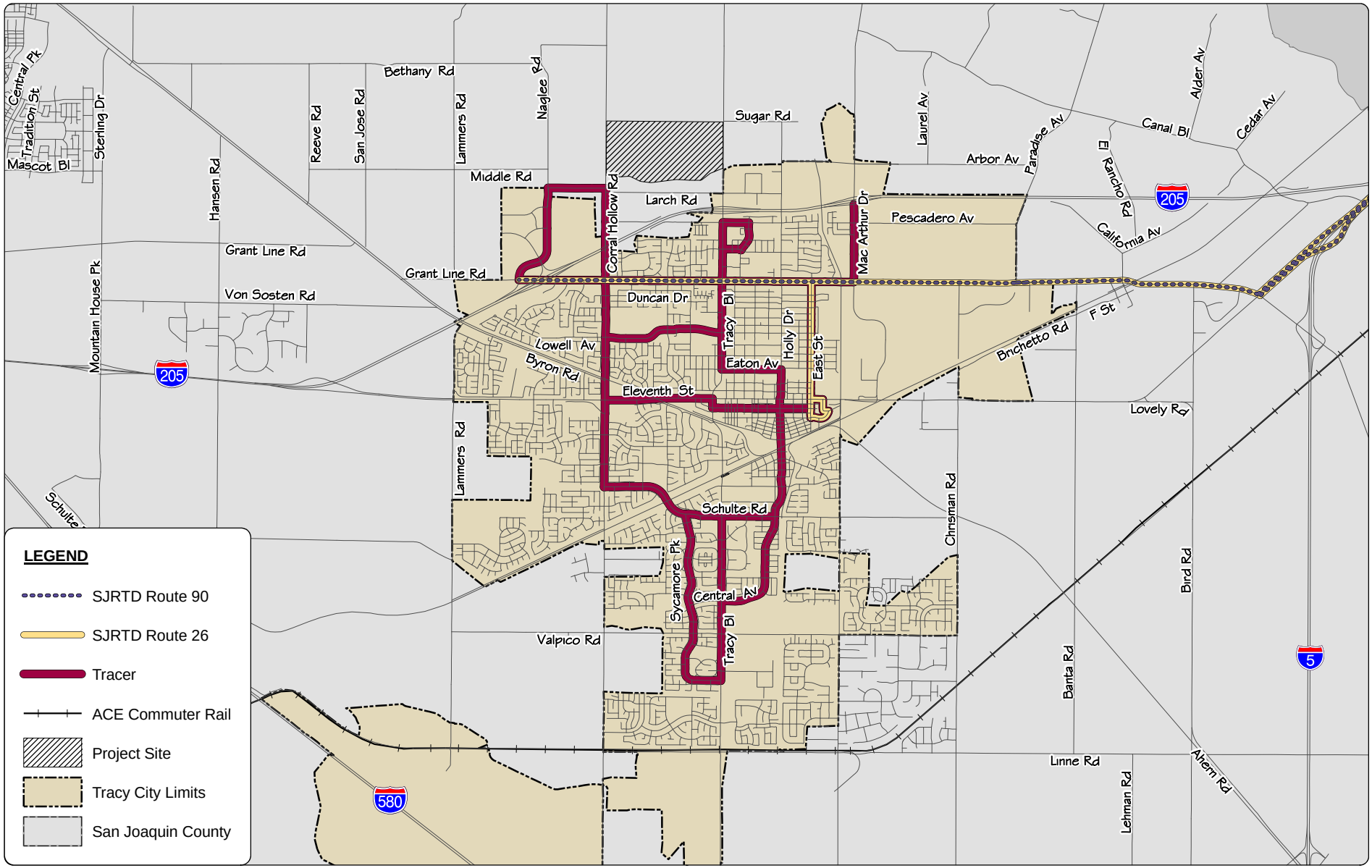

Holly Sugar Sports Park EIR

FEHR & PEERS
TRANSPORTATION CONSULTANTS

May 2009
WC08-2605_Transit

EXISTING TRANSIT ROUTES

FIGURE 2-2

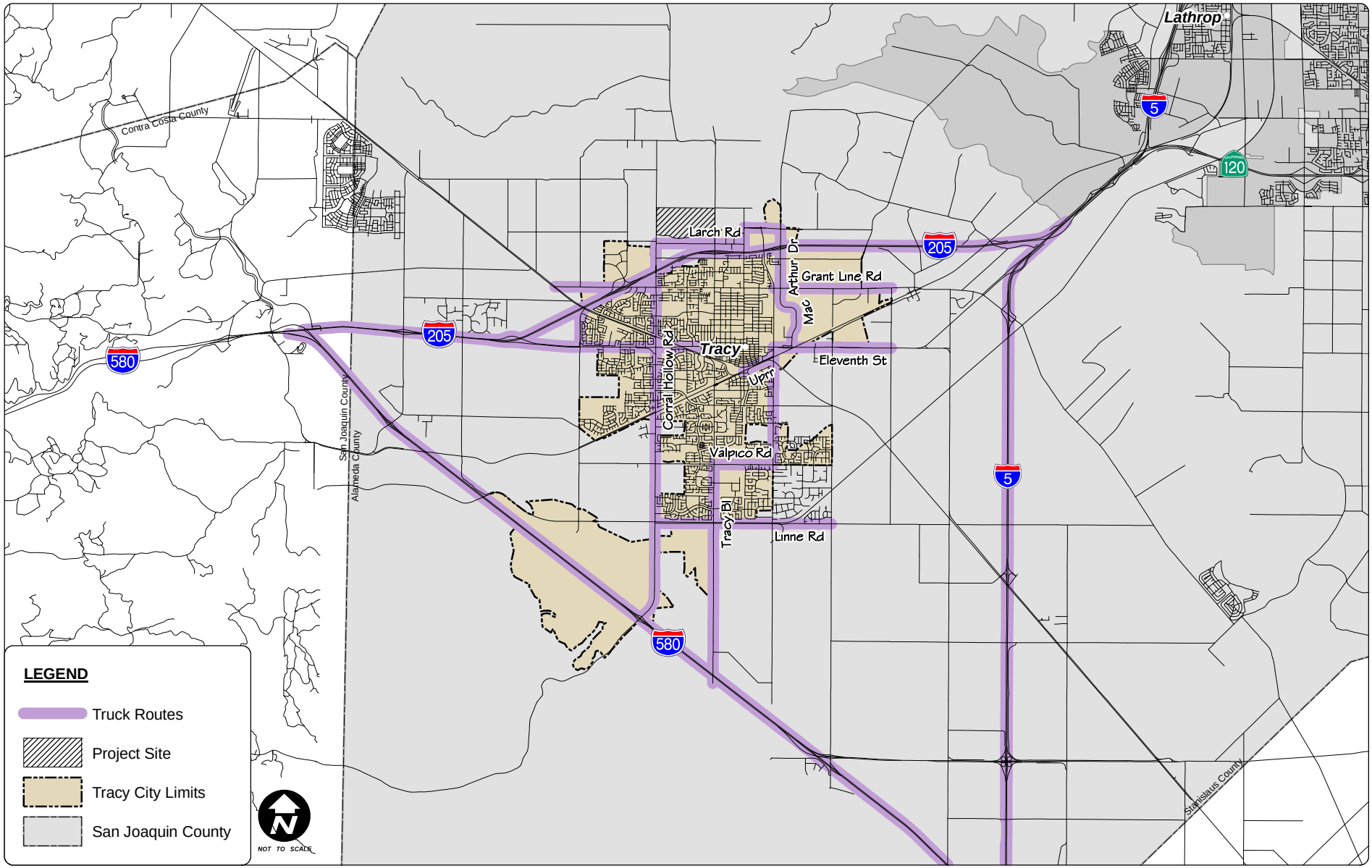

Holly Sugar Sports Park EIR

FEHR & PEERS
TRANSPORTATION CONSULTANTS

May 2009
WC08-2605_TruckRoutes

EXISTING TRUCK ROUTES

FIGURE 2-3

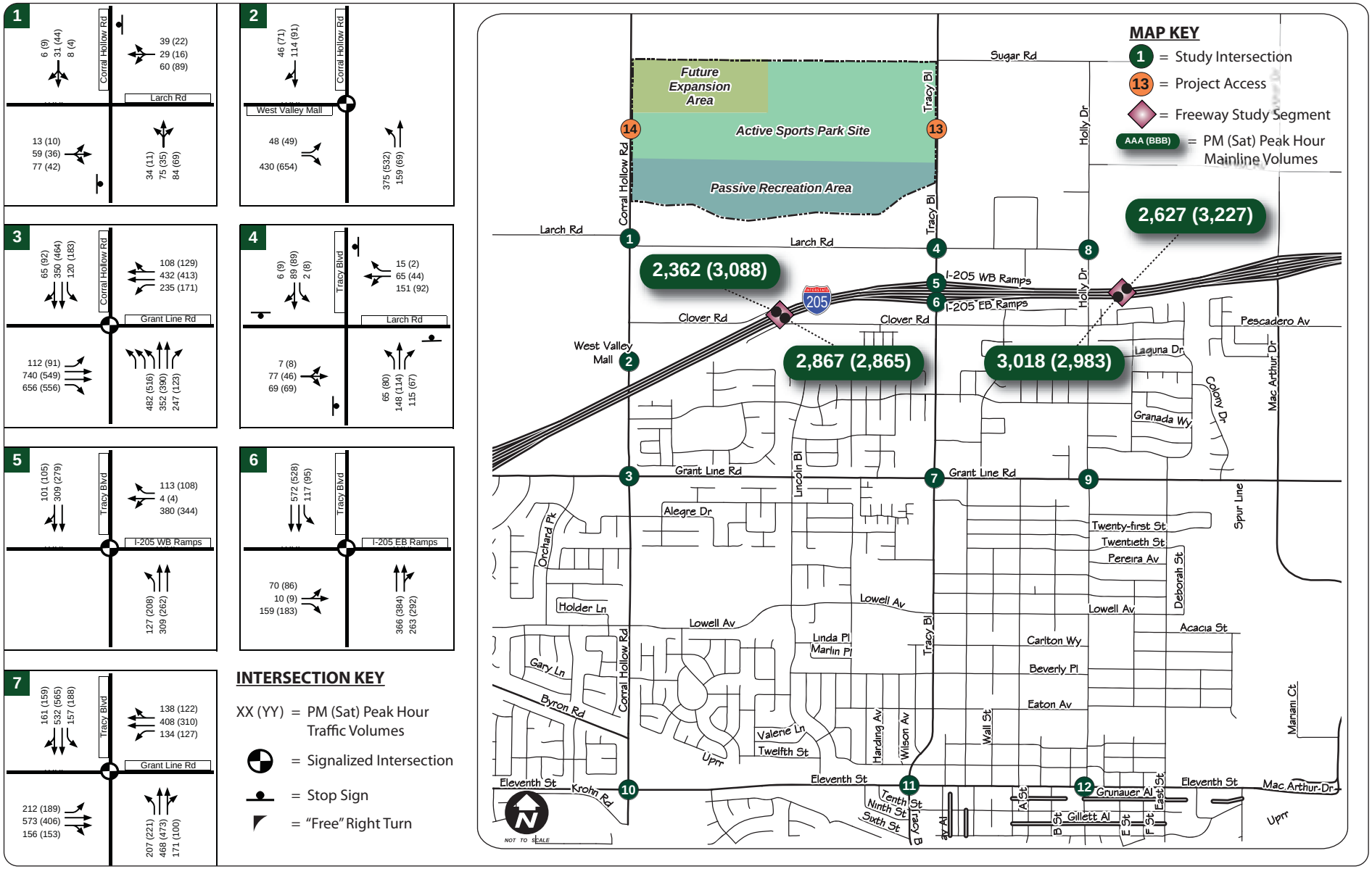

Holly Sugar Sports Park EIR

FEHR & PEERS
TRANSPORTATION CONSULTANTS

May 2009
Graphics\Report Graphics\WC08-2605_2-4A

EXISTING PEAK HOUR TRAFFIC VOLUMES AND INTERSECTION LANE CONFIGURATIONS

FIGURE 2-4A

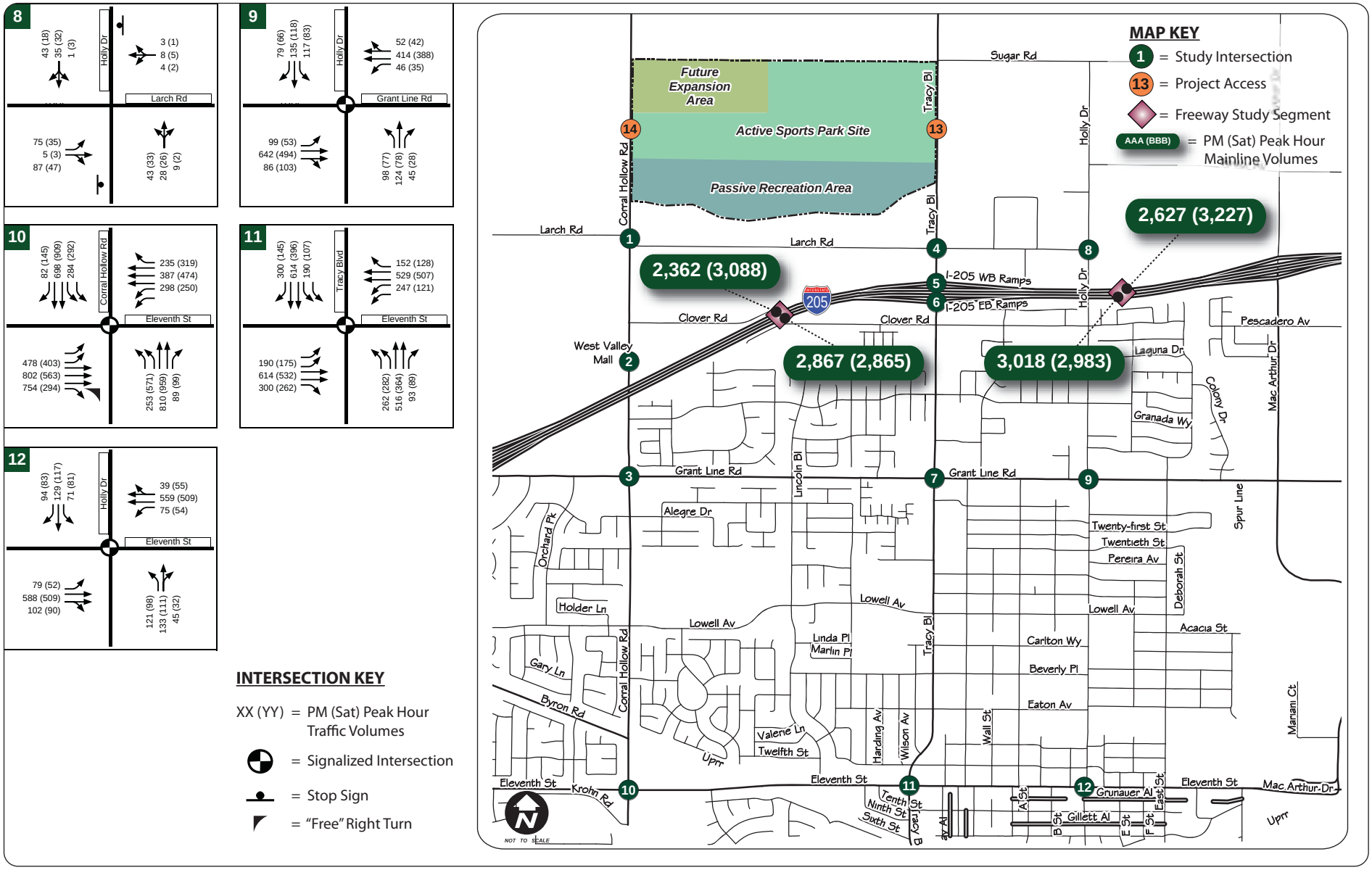

Holly Sugar Sports Park EIR

FEHR & PEERS
TRANSPORTATION CONSULTANTS

May 2009
Graphics\Report Graphics\WC08-2605_2-4B

EXISTING PEAK HOUR TRAFFIC VOLUMES AND INTERSECTION LANE CONFIGURATIONS

FIGURE 2-4B

TABLE 2-1
EXISTING PEAK HOUR INTERSECTION LEVELS OF SERVICE

Intersection		Control[1]	Peak Hour	Delay (in seconds)[2]	LOS	LOS Standard
1.	Larch Road/Corral Hollow Road	SSSC	PM SAT	7 (14) 6 (11)	A (B) A (B)	D
2.	West Valley Mall/Corral Hollow Road	Signal	PM SAT	13 16	B B	D
3.	Grant Line Road/Corral Hollow Road	Signal	PM SAT	48 29	D C	D
4.	Larch Road/Tracy Boulevard	AWS	PM SAT	12 10	B B	D
5.	I-205 Westbound Ramps/Tracy Boulevard	Signal	PM SAT	16 18	B B	D
6.	I-205 Eastbound Ramps/Tracy Boulevard	Signal	PM SAT	10 10	A B	D
7.	Grant Line Road/Tracy Boulevard	Signal	PM SAT	**38** **36**	**D** **D**	C
8.	Larch Road/Holly Drive	SSSC	PM SAT	6 (11) 6 (10)	A (B) A (A)	D
9.	Grant Line Road/Holly Drive	Signal	PM SAT	18 16	B B	C
10.	Eleventh Street/Corral Hollow Road	Signal	PM SAT	**40** **38**	**D** **D**	C
11.	Eleventh Street/Tracy Boulevard	Signal	PM SAT	**36** 24	**D** C	C
12.	Eleventh Street/Holly Drive	Signal	PM SAT	26 16	C B	C

Note: Results in **bold** represent unacceptable levels of service.

1. Signal = signalized intersection, SSSC = side street stop controlled intersection, AWSC = all-way stop-controlled intersection
2. For side-street stop-controlled intersections, delay is reported as: Intersection average (worst case approach).

Source: Fehr & Peers, 2009.

2.9 EXISTING PEAK HOUR TRAFFIC SIGNAL WARRANTS

To assess consideration for signalization of stop-controlled intersections, the *Manual of Uniform Traffic Control Devices* (MUTCD) (Federal Highway Administration, 2000), presents eight signal warrants. Generally, meeting one of the signal warrants could justify signalization of an intersection. However, an evaluation of all applicable warrants should be conducted and additional factors (e.g., congestion, approach conditions, driver confusion) should be considered before the decision to install a signal is made. The peak hour volume warrant (Warrant 3) for rural conditions was evaluated using the available data. The results of the traffic signal warrant analysis are shown in Table 2-2. Detailed signal warrant assessments are provided in Appendix C. As shown in Table 2-2, the rural peak hour volume traffic signal warrant is currently not satisfied at any of the unsignalized study intersections.

TABLE 2-2
EXISTING PEAK HOUR SIGNAL WARRANT ANALYSIS

Intersection		Control[1]	Peak Hour Warrant Met?
1.	Larch Road/Corral Hollow Road	SSC	NO
4.	Larch Road/Tracy Boulevard	AWS	NO
12.	Larch Road/Holly Drive	SSC	NO

Note:
1. SSSC = side-street stop-controlled intersection, AWSC = all-way stop-controlled intersection

Source: Fehr & Peers, 2009.

2.10 EXISTING FREEWAY LEVEL OF SERVICE

Existing freeway operations were evaluated for the weekday PM and Saturday peak hours for the study segments of I-205. The freeway segment LOS results are summarized in Table 2-3. All study freeway segments operate at LOS D or better. The HCM calculation worksheets can be found in Appendix D.

TABLE 2-3
EXISTING FREEWAY SEGMENT LEVEL OF SERVICE

Segment	Direction of Travel	Peak Hour	# of Lanes	Volume	Density[1]	LOS
I-80: West of Tracy Boulevard	Eastbound	PM SAT	2	2,867 2,865	24.3 23.8	C C
I-80: West of Tracy Boulevard	Westbound	PM SAT	2	2,362 3,088	20.0 26.1	C D
I-80: East of Tracy Boulevard	Eastbound	PM SAT	2	3,018 2,983	25.6 24.8	C C
I-80: East of Tracy Boulevard	Westbound	PM SAT	2	2,627 3,227	22.2 27.4	C D

Note:
1. Density measured in passenger cars per mile per lane

Source: Fehr & Peers, 2009.

CHAPTER 3. PROJECT CHARACTERISTICS

This section describes the proposed project and the components of its traffic forecasts: trip generation, trip distribution, and trip assignment.

3.1 PROJECT DESCRIPTION

The project site comprises approximately 298 acres of vacant land located between Tracy Boulevard and Corral Hollow Road north of Larch Road, and southwest of Sugar Road. Based on a project description and site plan dated November 5, 2008, the proposed project contains three areas: a 166-acre active sports park, an 86-acre passive recreation area, and a 46-acre future expansion area (sizes are approximate.) The project is expected to be constructed in phases with the active sports park to be constructed by 2015 and the passive recreation and future expansion areas to be constructed by 2030.

The proposed facilities for the active sports park area and future expansion area are:

Active Sports Park:

- 14 soccer fields of various sizes
- 18 baseball fields of various sizes
- 5 softball fields
- 4 football fields
- 3,500-seat football/soccer stadium
- 4 children's play areas

Future Expansion Area:

- recreational center
- library
- skate park
- BMX park
- spray park
- bocce ball courts
- paintball course
- hard courts and unmarked athletic fields

The passive recreation area will mainly serve as a buffer zone between the active sports park and the residential community on Larch Road. This area may be used for passive recreational activities such as walking and biking trails, disc golf, and/or an arboretum.

3.2 TRIP GENERATION

3.2.1 Trip Generation Assumptions

Project trip generation refers to the process of estimating the amount of vehicular traffic a project would add to the surrounding roadway system. Estimates of the total amount of traffic entering and exiting the project driveways are made for the two analysis time periods: a typical weekday PM peak hour (5:00 to 6:00 pm) and Saturday peak hour (3:30 to 4:30 pm). The project is expected to be constructed in phases. The active sports park is assumed to be constructed by 2015; the passive recreation and future expansion areas are assumed to be constructed by 2030. Therefore trip generation for Near-Term (2015) Conditions includes only traffic associated with the active sports parks and trip generation for Cumulative (2030) Conditions contains traffic for the entire sports park including the future expansion area.

Trip generation estimates are typically developed using trip generation rates contained in the Institute of Transportation Engineers (ITE), *Trip Generation,* (8th Edition). However, ITE rates are not available for many of the uses and facilities that are planned on the project site; therefore, rates were developed based on anticipated usage/attendance for those uses/facilities. The assumptions and trip generation rates that were used for each use are described in detail in Appendix E.

In consultation with City of Tracy staff, it was assumed that football season would occur during the Fall months, soccer season would occur during the Winter months, and baseball as well as softball season would occur during the Spring months, therefore no overlaps of sport seasons were assumed. The trip generation estimates for the various seasons are shown in Table E-1 in Appendix E. Given the project description and assumed trip generation rates, the project is anticipated to generate the largest number of vehicular trips during the soccer season. Therefore, project traffic estimates during soccer season were used to provide a conservative estimate of project impacts.

3.2.2 Near-Term Trip Generation

The active sports park area is the only portion of the project assumed to be constructed by 2015, the passive recreation and future expansion areas are assumed to be constructed by 2030.

It is anticipated that the active sports park will be used for practices during the weekday evenings and that games will be held throughout the day on weekends. The near-term (2015) peak hour trip generation estimates are presented in Appendix E and summarized in Table 3-1. Overall, the project would generate 310 new weekday PM peak hour trips and 1,820 new Saturday peak hour trips.

TABLE 3-1
PEAK HOUR TRIP GENERATION FOR NEAR-TERM CONDITIONS

Individual Use	Amount	Weekday PM[1]			Saturday[1]		
		In	Out	Total	In	Out	Total
Soccer Facilities	14 Fields	199	90	289	448	448	896
Soccer/Football Stadium	1 Field	14	7	21	840	84	924
Total	**15 Fields**	**213**	**97**	**310**	**1,288**	**532**	**1,820**

Notes:
1. Refer to Appendix E for trip generation rates and assumptions

Source: *Trip Generation (8th Edition),* ITE, 2008; and Fehr & Peers, 2009.

3.2.3 Cumulative Trip Generation

The passive recreation area and the future expansion area are anticipated to be constructed by 2030, in addition to the active sports park area. According to the project description, the 86-acre passive recreation area would serve as a buffer between the more developed active park uses and the residential community to the south of the project site; vehicular access is not proposed to the area. Because the passive recreation area would mainly serve as a buffer, it is not expected to generate additional project trips; instead it is assumed that visitors to the active sports park and future expansion areas would make use of the facilities provided on the passive recreation area.

A specific site plan for the future expansion area has not yet been developed; however, for the purposes of this analysis the following uses and sizes, developed in coordination with City of Tracy staff, were used:

- 45,000-square foot recreational center
- 25,000-square foot library
- 11,000-square foot skate park
- 11,000-square foot BMX park
- 2.5-acre paintball course
- 4 bocce ball courts
- 23 acres of park area that includes hard courts, grass fields, and a spray park

Table 3-2 summarizes the trip generation estimates for the project during cumulative (2030) conditions. (See Appendix E for detailed information.) Overall, the project would generate 594 new weekday PM peak hour trips and 2,162 new Saturday peak hour trips.

TABLE 3-2
PEAK HOUR TRIP GENERATION FOR CUMULATIVE CONDITIONS

Individual Use	Amount	Weekday PM[1]			Saturday[1]		
		In	Out	Total	In	Out	Total
Soccer Facilities	14 Fields	199	90	289	448	448	896
Soccer/Football Stadium	1 Field	14	7	21	840	84	924
Recreation Center	45 ksf	31	52	83	26	22	48
Library	25 ksf	88	95	183	90	79	169
Skate Park	11 ksf	4	4	8	22	12	34
BMX Park	11 ksf	4	4	8	22	12	34
Park Area[2]	26 acres	1	1	2	34	23	57
Total	**--**	**341**	**253**	**594**	**1,482**	**680**	**2,162**

Notes:
1. Refer to Appendix E for trip generation rates and assumptions
2. Park area includes the paintball course, bocce ball courts, basketball courts, spray park, and the unmarked grass fields.

Source: *Trip Generation (*8th Edition*),* ITE, 2008; and Fehr & Peers, 2009.

Based on discussions with City staff, it is expected that the project site will generate local and regional trips. Table 3-3 presents the local and regional distribution of total trips being generated for each use for the weekday PM and Saturday afternoon peak hours. As shown in Table 3-3, it is estimated that the majority of weekday PM trips will be generated locally within the City of Tracy and the majority of Saturday trips will be generated regionally for the active sports park and locally for the future expansion area.

TABLE 3-3
LOCAL AND REGIONAL TRIP GENERATION BY DAY OF WEEK

Individual Use	Amount	Weekday PM [1]		Saturday [2]	
		Local	Regional	Local	Regional
Soccer Facilities	14 Fields	90%	10%	40%	60%
Soccer/Football Stadium	1 Field	90%	10%	30%	70%
Recreation Center	45 ksf	90%	10%	90%	10%
Library	25 ksf	90%	10%	90%	10%
Skate Park	11 ksf	90%	10%	80%	20%
BMX Park	11 ksf	90%	10%	80%	20%
Park Area[3]	26 acres	90%	10%	80%	20%

Notes: Percentage of total trips by land use type.

1. Weekday assumes local practices.
2. Saturday assumes regional games and events.
3. Park area includes the paintball course, bocce ball courts, basketball courts, spray park, and the unmarked grass fields.

Source: Fehr & Peers, 2009.

3.3 TRIP DISTRIBUTION AND ASSIGNMENT

The distribution of the near-term and cumulative project traffic varies by day of the week. For weekday practices and weekend trips to the library and future expansion area, it was assumed that most the trips would be from within Tracy (local distribution), while the active sports park and stadium would have a larger draw from outside of Tracy (regional distribution).

Based on discussions with City staff, it is anticipated that a majority of the activities occurring at the project site will be focused on youth between the ages of 5 and 17. The locational distribution of people within this age range based on 2000 Census data is shown on Figure 3-1 and is the basis of the local trip distribution. Similarly, the regional distribution of population between the ages of 5 and 17 shown on Figure 3-2 is the basis of the regional trip distribution.

Trips generated by the proposed project were assigned to the roadway system based on the distributions shown on Figures 3-1 and 3-2. The near-term peak hour project trip assignments are shown on Figure 3-3. The cumulative peak hour project trip assignments are shown on Figure 3-4.

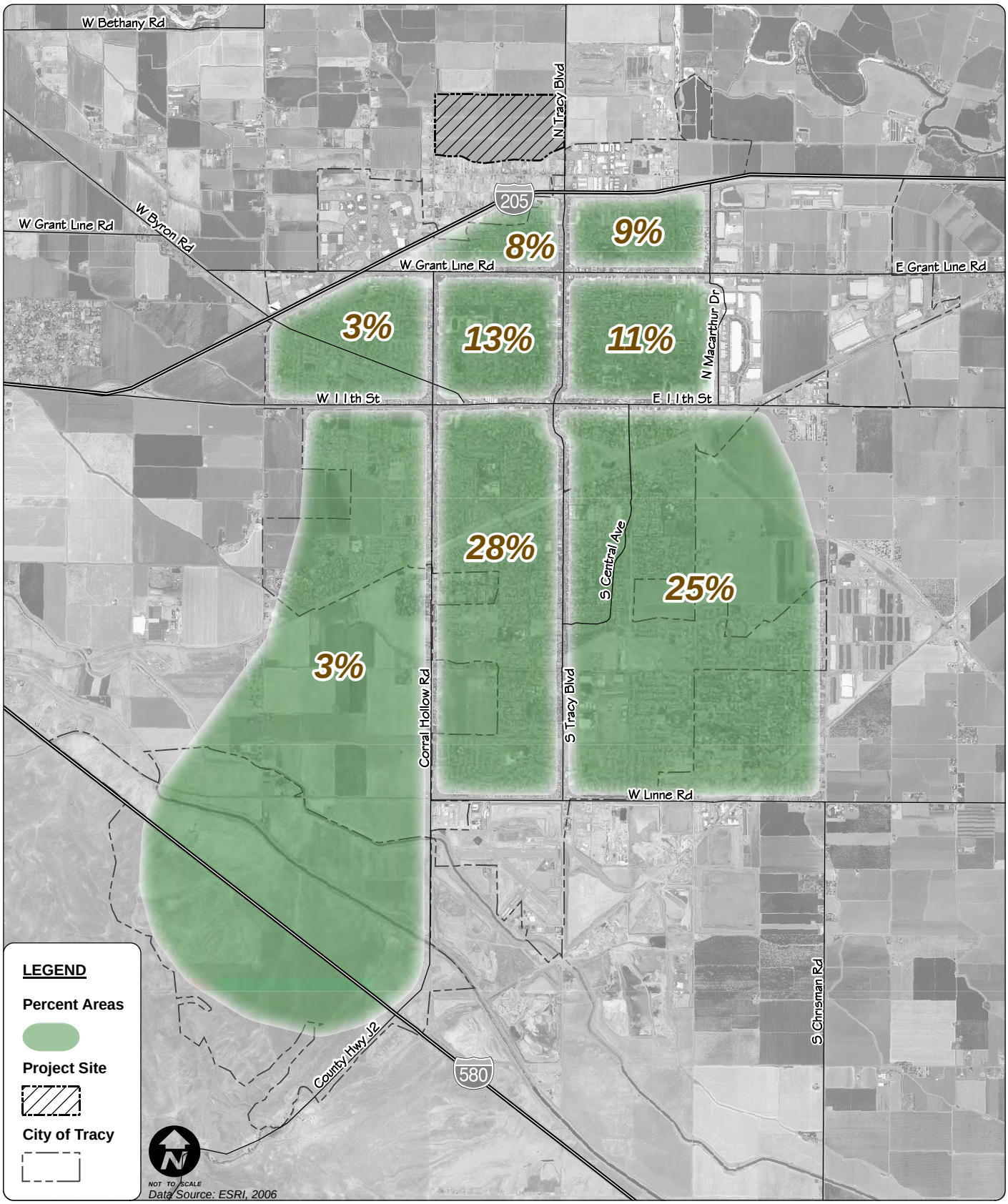

Holly Sugar Sports Park EIR

FEHR & PEERS
TRANSPORTATION CONSULTANTS

May 2009
Graphics\Report Graphics\WC08-2605_3-1

CITY OF TRACY
POPULATION DISTRIBUTION
OF YOUTH AGES 5-17

FIGURE 3-1

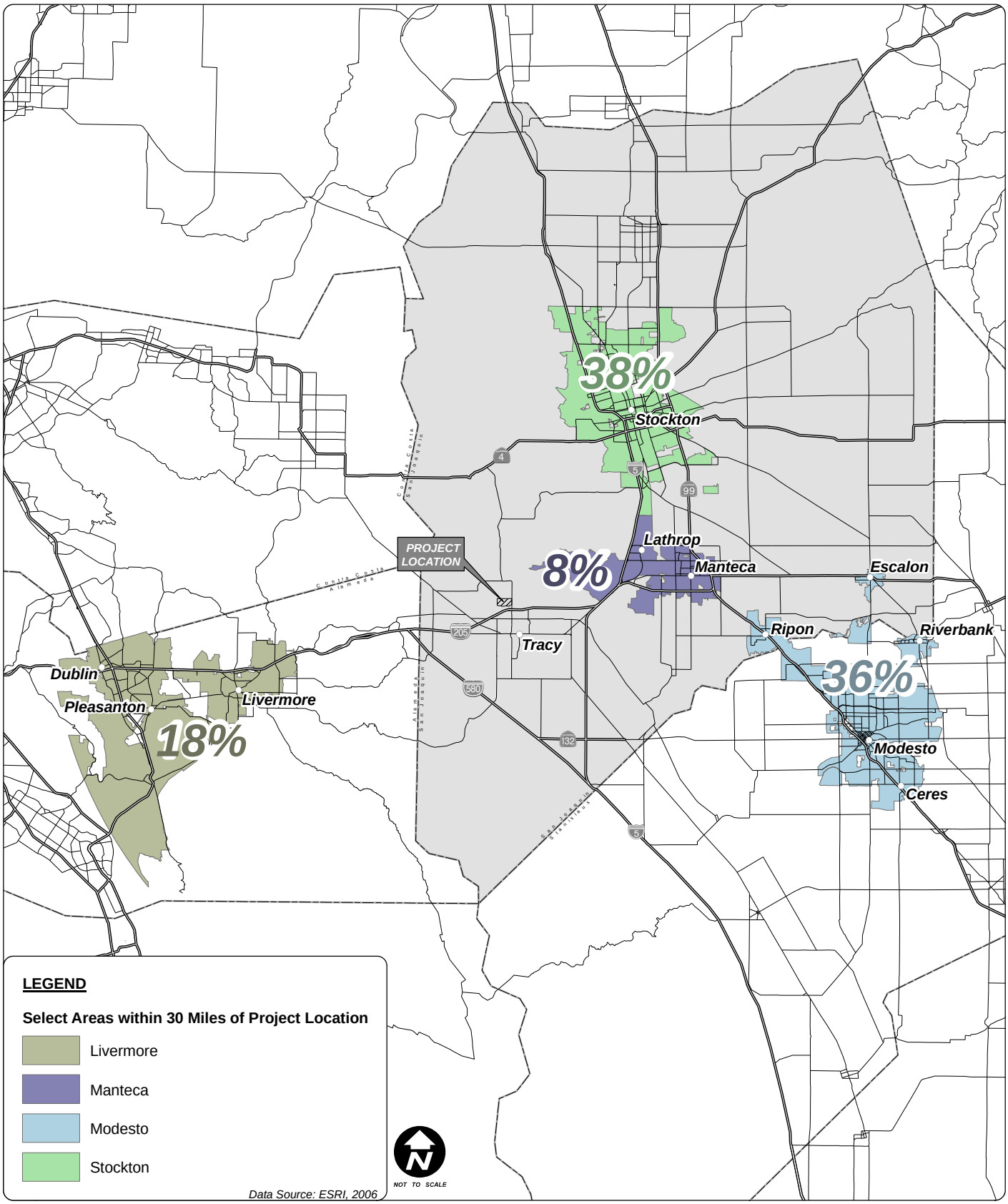

Holly Sugar Sports Park EIR

FEHR & PEERS
TRANSPORTATION CONSULTANTS

May 2009
Graphics\Report Graphics\WC08-2605_3-2

REGIONAL POPULATION DISTRIBUTION OF YOUTH AGES 5-17

FIGURE 3-2

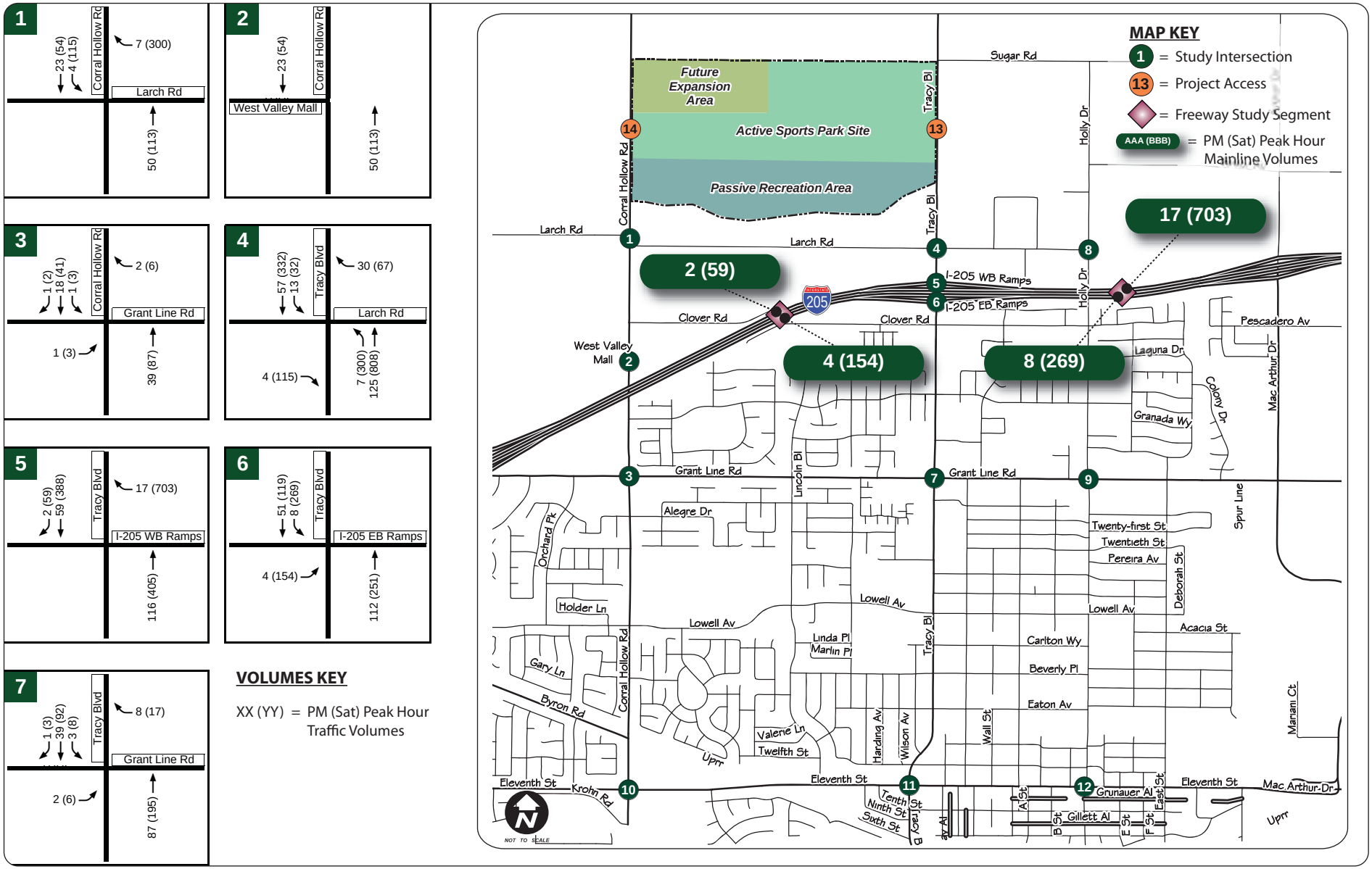

Holly Sugar Sports Park EIR

FEHR & PEERS
TRANSPORTATION CONSULTANTS

May 2009
Graphics\Report Graphics\WC08-2605_3-3A

NEAR-TERM PEAK HOUR PROJECT TRIP ASSIGNMENT

FIGURE 3-3A

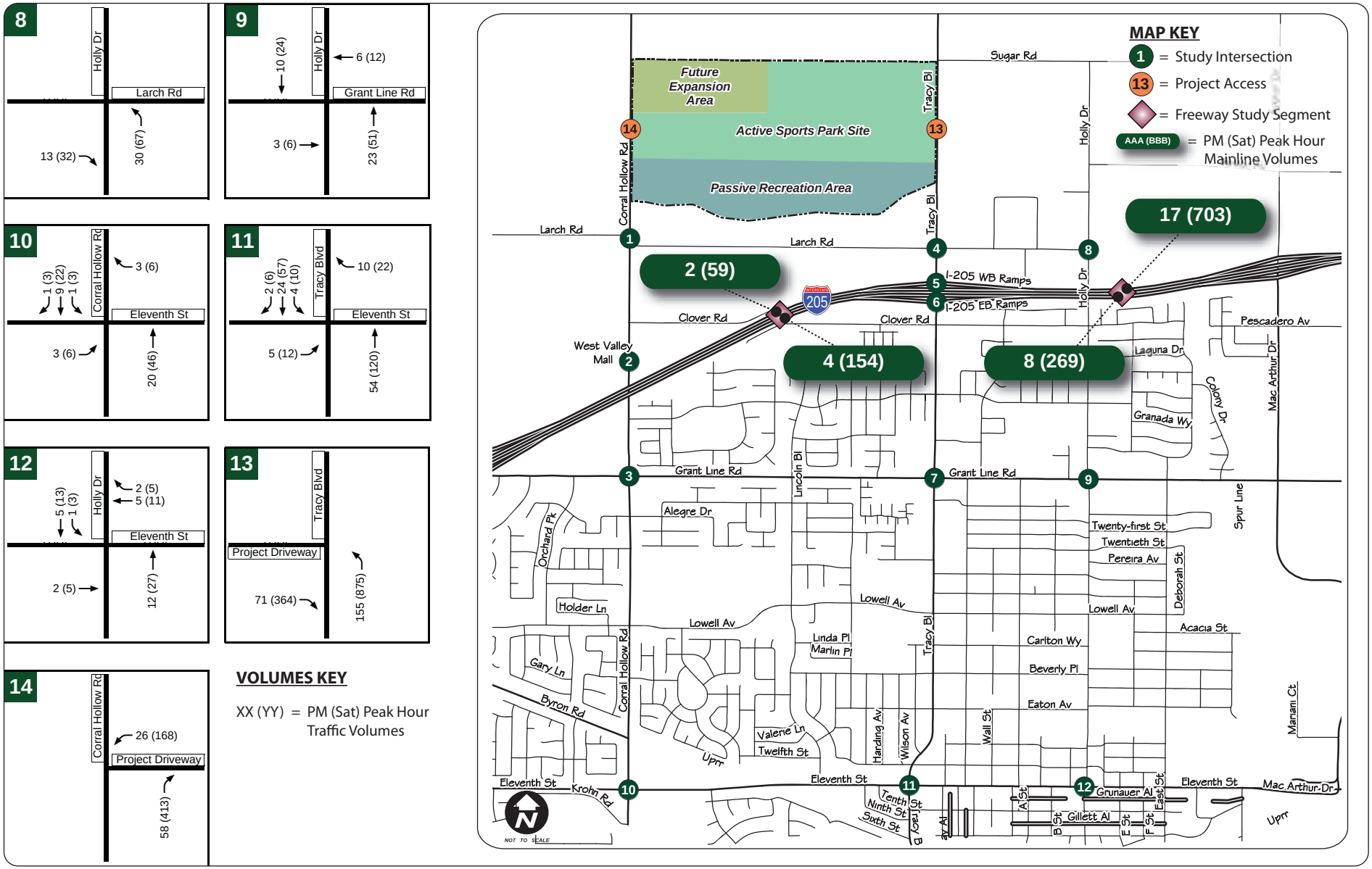

Holly Sugar Sports Park EIR

FEHR & PEERS
TRANSPORTATION CONSULTANTS

May 2009
Graphics\Report Graphics\WC08-2605_3-3B

NEAR-TERM PEAK HOUR PROJECT TRIP ASSIGNMENT

FIGURE 3-3B

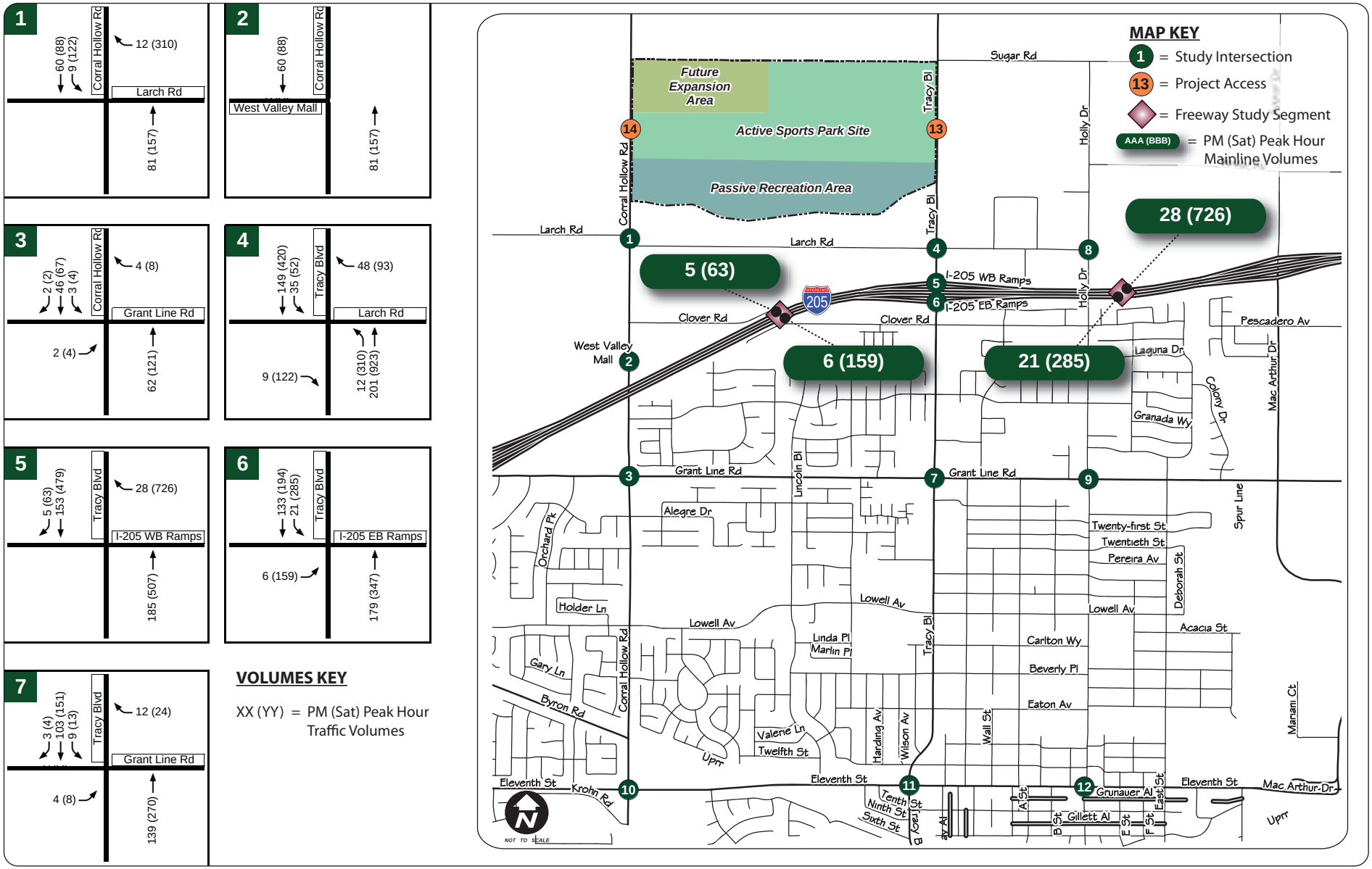

Holly Sugar Sports Park EIR

FEHR & PEERS
TRANSPORTATION CONSULTANTS

May 2009
Graphics\Report Graphics\WC08-2605_3-4A

CUMULATIVE PEAK HOUR PROJECT TRIP ASSIGNMENT

FIGURE 3-4A

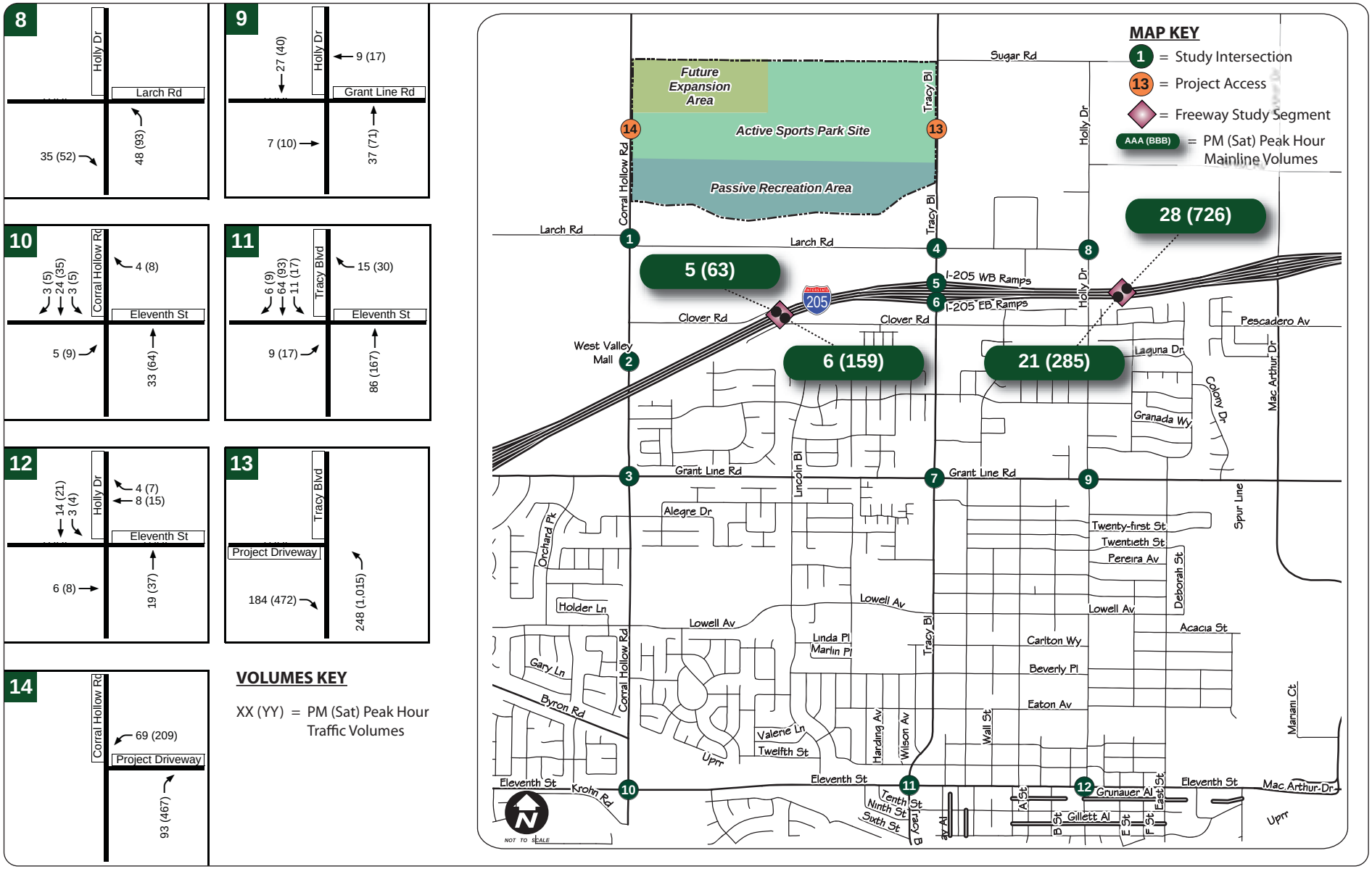

Holly Sugar Sports Park EIR

FEHR & PEERS
TRANSPORTATION CONSULTANTS

May 2009
Graphics\Report Graphics\WC08-2605_3-4B

CUMULATIVE PEAK HOUR PROJECT TRIP ASSIGNMENT

FIGURE 3-4B

CHAPTER 4. NEAR-TERM TRAFFIC CONDITIONS

A Near-Term Conditions analysis was performed to identify potential impacts in year 2015.

4.1 NEAR-TERM (2015) ROADWAY ASSUMPTIONS

The roadway network for Near-Term Conditions is the existing roadway system plus planned and funded roadway improvements. The only major improvement assumed under Near-Term Conditions was the widening of I-205 from four to six lanes east of Eleventh Street, which is currently under construction. All study intersections were evaluated with the same lane configurations as Existing Conditions.

4.2 NEAR-TERM (2015) FORECASTS

Traffic forecasts for the study locations were prepared using the City of Tracy General Plan Traffic Model. The process of developing forecasts followed a series of commonly-used quantitative steps in which the amount of growth projected by the model is added to the existing counts in order to estimate future year traffic volumes. The specific steps used to develop traffic forecasts from the City model are presented below.

4.2.1 Near-Term Without Project Traffic

Traffic volumes for Near-term Conditions comprise existing traffic plus traffic generated by the approved Ellis Specific Plan development project. (The Ellis Specific Plan land use is assumed to be built out under Near-term Conditions.) The near-term model was developed by adjusting the base year land use to include the Ellis Specific Plan land use. Traffic generated from the Ellis Specific Plan development represents the growth between the base year traffic model and the near-term model. Near-Term No Project intersection forecasts were developed by adding the model growth between the base year model and the near-term model to the existing intersection counts. Near-term No Project weekday PM and Saturday peak hour turning movement volumes were developed using the following three-step process:

- **Step 1** - The city model was executed with the base year roadway network assumptions and near-term land use assumptions to determine the "raw" (i.e., unadjusted) peak hour demand forecasts for the study intersections.

- **Step 2** - The weekday PM peak hour turning movement demand forecasts were developed using the "delta" method to account for model deviation according to the following formula:

  Near-Term Weekday PM Adjusted Turning Movement Forecast =
  (Near-Term Weekday PM Model Turning Movement Forecast – Base Year Weekday PM Model Turning Movement Forecast) + Existing Weekday PM Turning Movement Volume

- **Step 3** – The City of Tracy General Plan Traffic Model was designed for weekday AM, PM, and daily forecasts, but not for weekend forecasts. Saturday peak hour turning movement forecasts were developed according to the following formula:

  Near-Term Saturday Adjusted Turning Movement Forecast =
  (Existing Saturday Turning Movement Volume – Existing Weekday PM Turning Movement Volume) + Near-Term Weekday PM Adjusted Turning Movement Forecast

Near-term weekday PM and Saturday peak hour freeway demand forecasts were developed using the following three-step process.

- **Step 1** – Near-term weekday PM peak hour freeway demand forecasts on I-205 between Tracy Boulevard and MacArthur Drive were adjusted using the delta method to account for model deviation according to the following formula:

  Near-Term Weekday PM Adjusted Freeway Demand Forecast =
  (Near-Term Weekday PM Model Freeway Forecast – Base Year Weekday PM Model Freeway Forecast) +
  Existing Freeway Weekday PM Volume

- **Step 2** – The City of Tracy General Plan Traffic Model was designed for weekday AM, PM, and daily forecasts, but not for weekend forecasts. Saturday peak hour freeway demand forecasts were developed according to the following formula:

  Near-Term Saturday Adjusted Freeway Demand Forecast =
  (Existing Saturday Freeway Volume – Existing Weekday PM Freeway Volume) + Near-Term Weekday PM Adjusted Freeway Forecast

- **Step 3** - Demand forecasts at other locations along I-205 were estimated by balancing the volumes using the intersection forecasts discussed above to calculate on and off-ramp volumes. Starting at I-205 between Tracy Boulevard and MacArthur Drive, off-ramp volumes were subtracted and on-ramp volumes were added to the mainline volume to estimate mainline volumes along the other segments of I-205.

The forecasted Near-Term No Project intersection and freeway peak hour demand volumes are presented on Figure 4-1.

4.2.2 Near-Term Plus Project Traffic

Based on the trip generation and distribution assumptions, trips expected to be generated by the Project under Near-term Conditions were assigned through the study intersections. The near-term project peak hour trip assignment for each study intersection is shown on Figure 3-3. Near-Term Plus Project peak hour traffic forecasts were developed by adding the assigned project trips at each study intersection to the Near-Term No Project forecasts. Near-Term Plus Project peak hour traffic forecasts are shown on Figure 4-2.

4.3 ANALYSIS OF NEAR-TERM (2015) CONDITIONS

The Near-Term (2015) Conditions analysis was performed using the same methodologies discussed previously.

4.3.1 Intersection Operations

The Near-Term intersection analysis results are presented in Table 4-1. As shown, all study intersections are projected to operate at acceptable service levels without project conditions except the following:

- Grant Line Road/Tracy Boulevard operates at LOS D during the PM and Saturday peak hours
- Eleventh Street/Corral Hollow Road operates at LOS D during the PM and Saturday peak hours
- Eleventh Street/Tracy Boulevard operates at LOS D during the PM peak hour

With the addition of project traffic, the following intersections operate unacceptably in addition to the three intersections mentioned above:

- Larch Road/Corral Hollow Road operates unacceptably with 43 seconds of average delay (LOS E) on the westbound approach during the Saturday peak hour
- Larch Road/Tracy Boulevard operates at LOS F during the Saturday peak hour

The project driveways are projected to operate at good levels with stop sign control under Near-term Conditions. The LOS calculation worksheets for the Near-Term No Project and Plus Project scenarios are provided in Appendix B.

TABLE 4-1
NEAR-TERM (2015) PEAK HOUR INTERSECTION LEVELS OF SERVICE

Intersection		Control[1]	Peak Hour	No Project		Plus Project	
				Delay [2] (in seconds)	LOS	Delay [2] (in seconds)	LOS
1.	Larch Road/Corral Hollow Road	SSSC	PM SAT	8 (15) 7 (12)	A (C) A (B)	8 (18) 22 **(43)**	A (C) C **(E)**
2.	West Valley Mall/Corral Hollow Road	Signal	PM SAT	13 17	B B	14 18	B B
3.	Grant Line Road/Corral Hollow Road	Signal	PM SAT	52 31	D C	52 32	D C
4.	Larch Road/Tracy Boulevard	AWS	PM SAT	13 11	B B	17 **>50**	C **F**
5.	I-205 Westbound Ramps/Tracy Boulevard	Signal	PM SAT	17 17	B B	17 53	B D
6.	I-205 Eastbound Ramps/Tracy Boulevard	Signal	PM SAT	10 10	A B	10 25	B C
7.	Grant Line Road/Tracy Boulevard	Signal	PM SAT	**39** **37**	**D** **D**	**40** **37**	**D** **D**
8.	Larch Road/Holly Drive	SSSC	PM SAT	7 (11) 6 (10)	A (B) A (B)	7 (12) 7 (11)	A (B) A (B)
9.	Grant Line Road/Holly Drive	Signal	PM SAT	19 16	B B	20 17	C B
10.	Eleventh Street/Corral Hollow Road	Signal	PM SAT	**41** **43**	**D** **D**	**41** **45**	**D** **D**
11.	Eleventh Street/Tracy Boulevard	Signal	PM SAT	**36** 24	**D** C	**36** 25	**D** C
12.	Eleventh Street/Holly Drive	Signal	PM SAT	27 17	C B	27 19	C B
13.	Project Driveway/Tracy Boulevard	SSSC	PM SAT	n/a	--	4 (9) 10 (12)	A (A) A (B)
14.	Project Driveway/Corral Hollow Road	SSSC	PM SAT	n/a	--	1 (10) 3 (14)	A (B) A (B)

Note: Results in **bold** represent unacceptable levels of service.

1. Signal = signalized intersection, SSSC = side street stop controlled intersection, AWSC = all-way stop-controlled intersection
2. For side-street stop-controlled intersections, delay is reported as: Intersection average (worst case approach).

Source: Fehr & Peers, 2009.

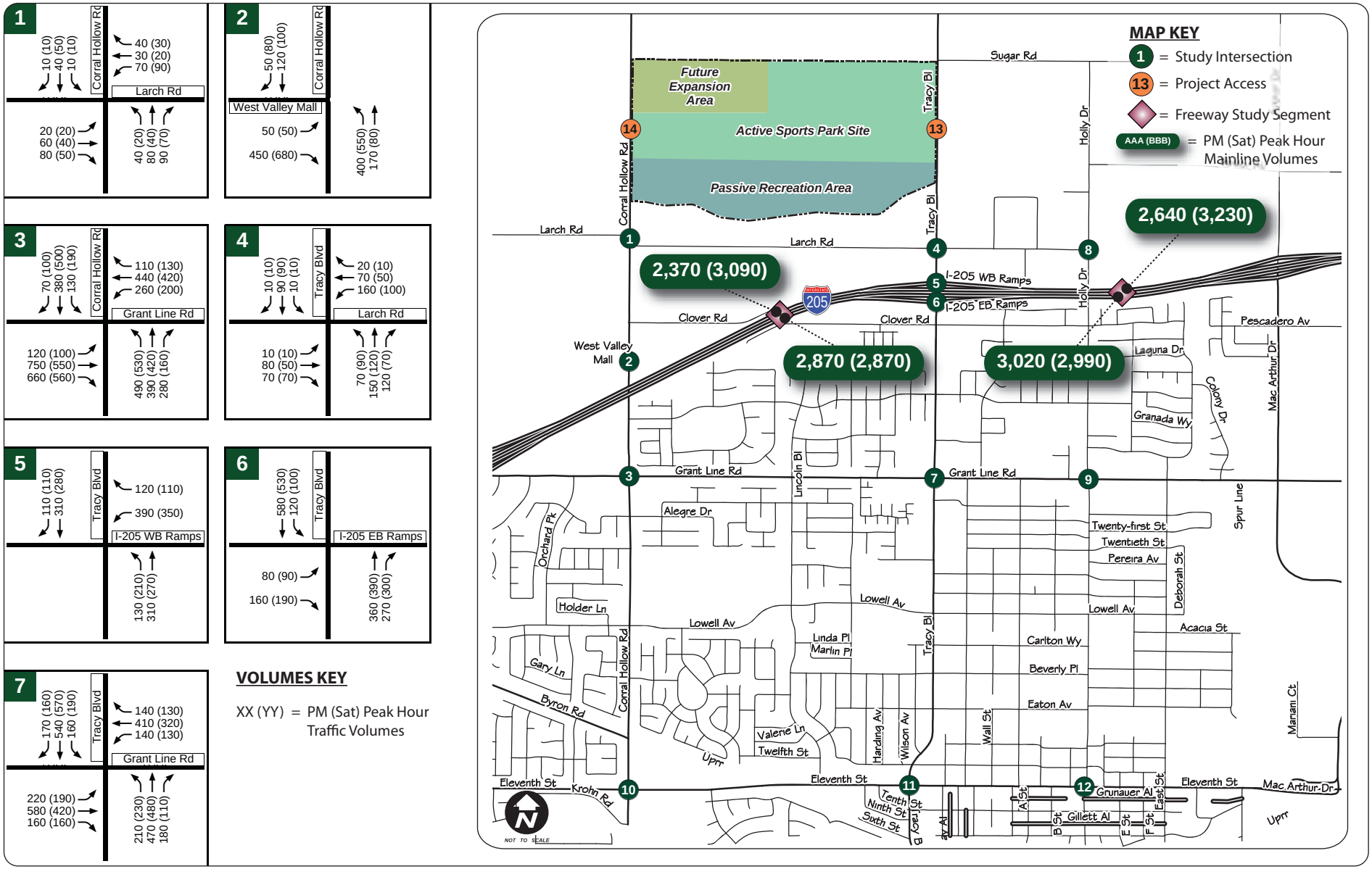

Holly Sugar Sports Park EIR

FEHR & PEERS
TRANSPORTATION CONSULTANTS

May 2009
Graphics\Report Graphics\WC08-2605_4-1A

NEAR-TERM NO PROJECT PEAK HOUR TRAFFIC VOLUMES

FIGURE 4-1A

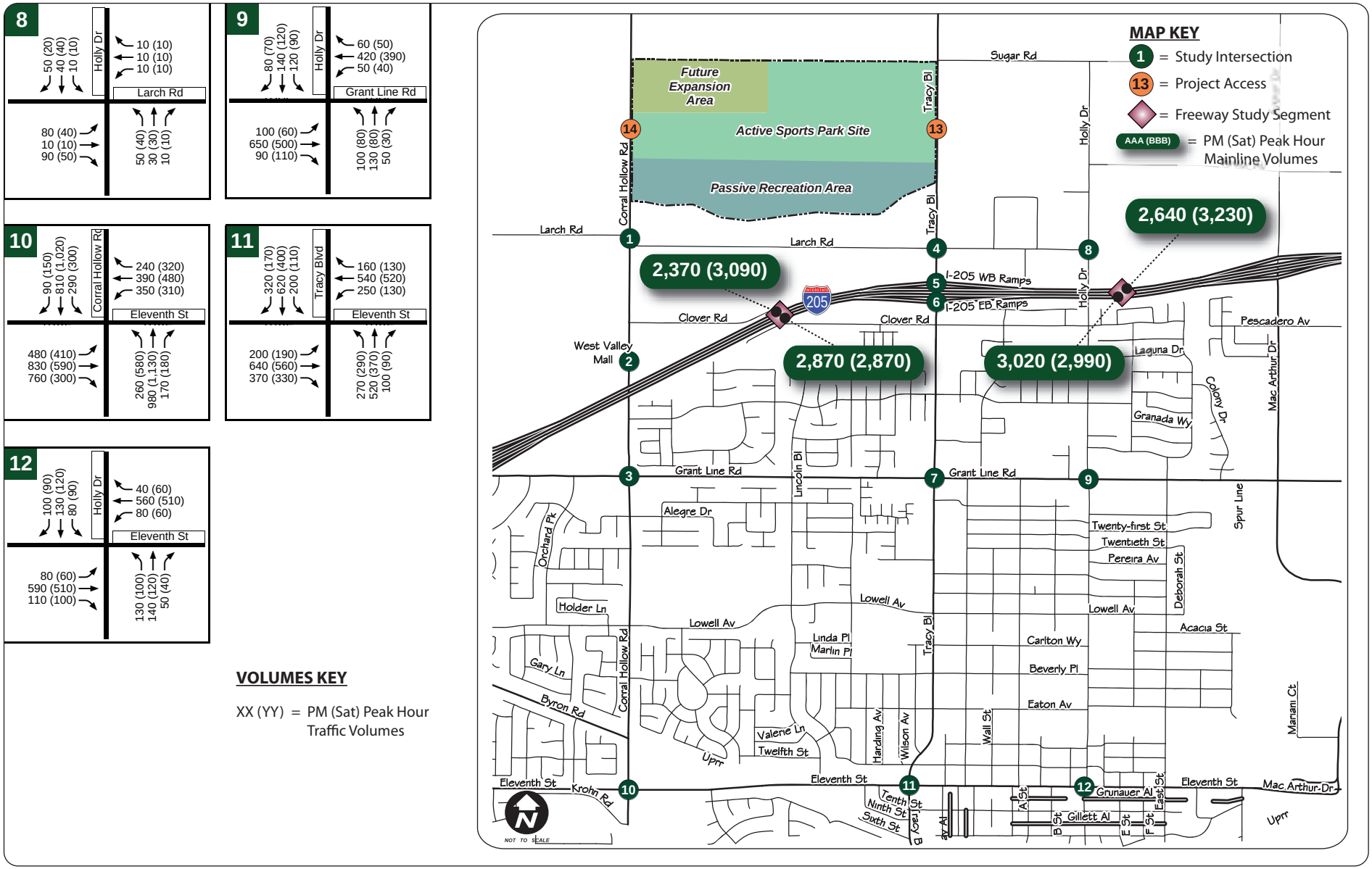

Holly Sugar Sports Park EIR

FEHR & PEERS
TRANSPORTATION CONSULTANTS

May 2009
Graphics\Report Graphics\WC08-2605_4-1B

NEAR-TERM NO PROJECT PEAK HOUR TRAFFIC VOLUMES

FIGURE 4-1B

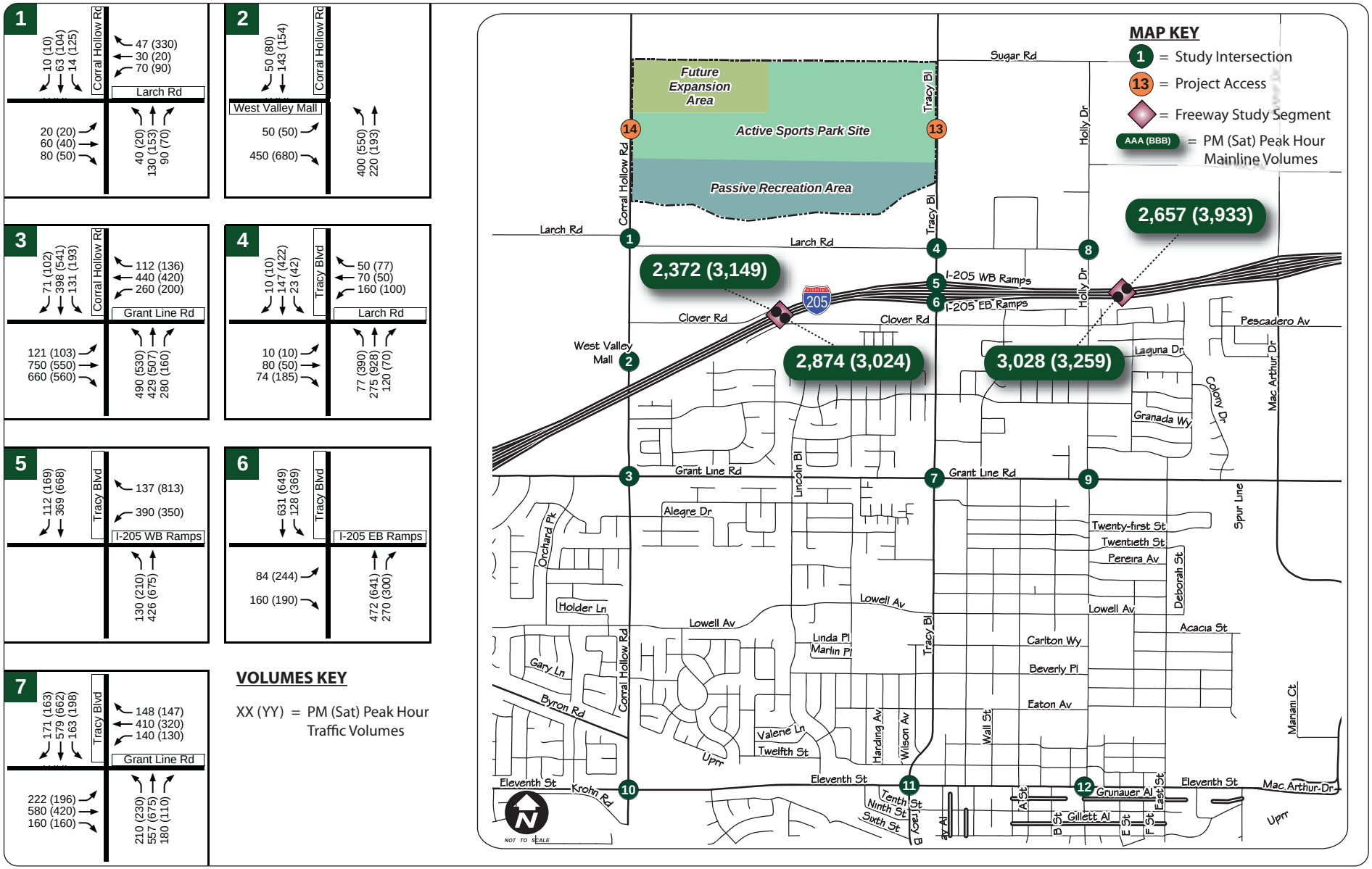

Holly Sugar Sports Park EIR

FEHR & PEERS
TRANSPORTATION CONSULTANTS

May 2009
Graphics\Report Graphics\WC08-2605_4-2A

NEAR-TERM PLUS PROJECT PEAK HOUR TRAFFIC VOLUMES

FIGURE 4-2A

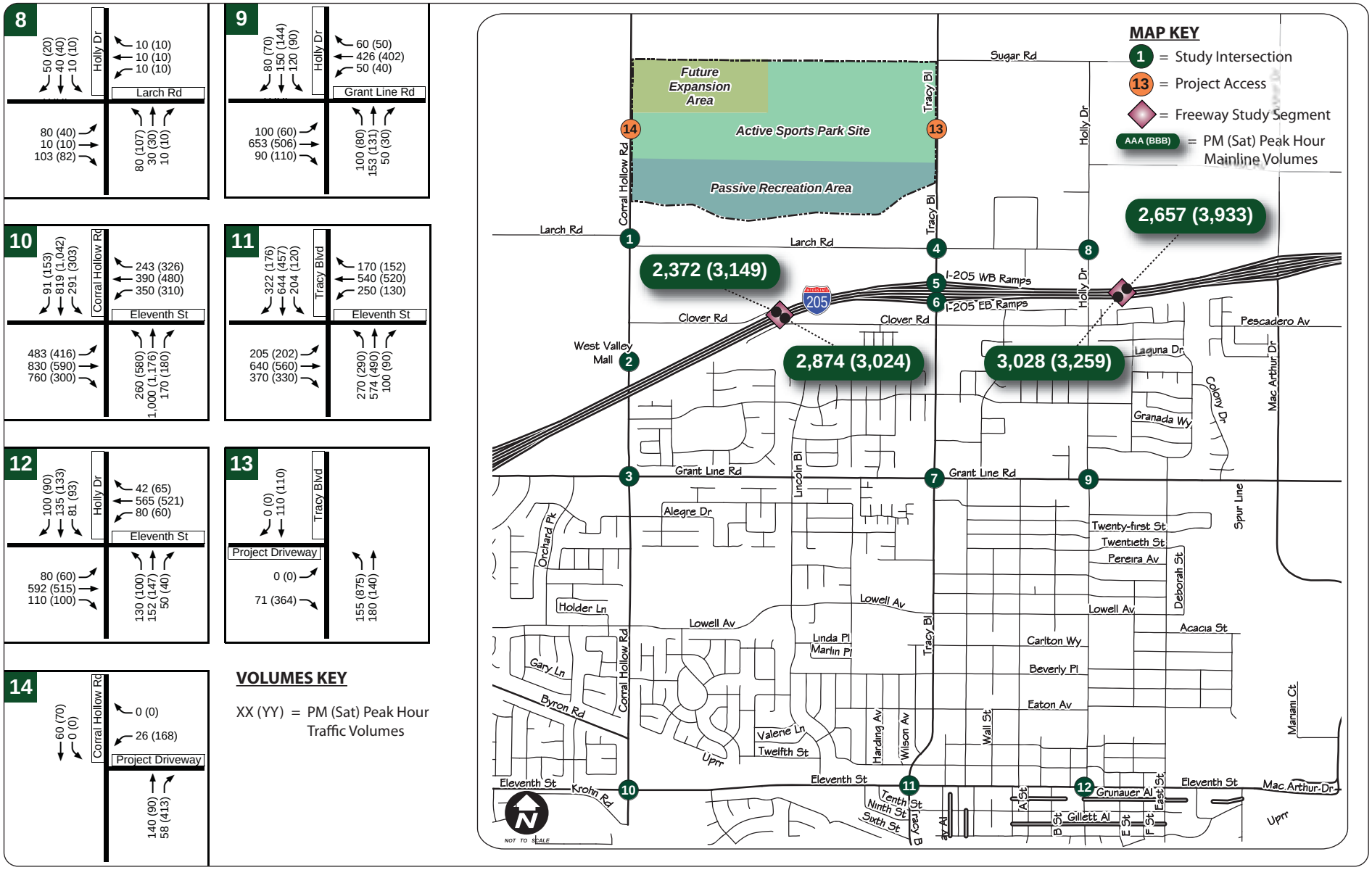

Holly Sugar Sports Park EIR

FEHR & PEERS
TRANSPORTATION CONSULTANTS

May 2009
Graphics\Report Graphics\WC08-2605_4-2B

NEAR-TERM PLUS PROJECT PEAK HOUR TRAFFIC VOLUMES

FIGURE 4-2B

4.3.2 Peak Hour Traffic Signal Warrant Analysis

The peak hour volume traffic signal warrant (Warrant 3) for rural conditions, found in the *Manual of Uniform Traffic Control Devices* (MUTCD) (Federal Highway Administration, 2000), was evaluated for the unsignalized intersections in the study area, as shown in Table 4-2. None of the unsignalized study intersections meet the peak hour signal warrant under Near-Term No Project Conditions. With the addition of project traffic, the following intersections meet the peak hour signal warrant:

- Larch Road/Corral Hollow Road
- Larch Road/Tracy Boulevard
- Project Driveway/Tracy Boulevard

The intersections along Larch Road at Corral Hollow Road and Tracy Boulevard are projected to operate unacceptably during the Saturday peak hour with the addition of project traffic. Even though the project driveway intersection at Tracy Boulevard meets the peak hour signal warrant, it is expected to operate at an acceptable level of service during the PM and Saturday peak hours. An evaluation of all applicable warrants should be conducted and additional factors (e.g., congestion, approach conditions, driver confusion) should be considered before the decision to install a signal is made. Detailed signal warrant calculations are provided in Appendix C.

TABLE 4-2
NEAR-TERM (2015) PEAK HOUR SIGNAL WARRANT ANALYSIS

Intersection		Control[1]	No Project	Plus Project
			Peak Hour Warrant Met?	Peak Hour Warrant Met?
1.	Larch Road/Corral Hollow Road	SSSC	NO	**YES**
4.	Larch Road/Tracy Boulevard	AWS	NO	**YES**
8.	Larch Road/Holly Drive	SSSC	NO	NO
13.	Project Driveway/Tracy Boulevard	SSSC	--	**YES**
14.	Project Driveway/Corral Hollow Road	SSSC	--	NO

Note:
1. SSSC = side-street stop-controlled intersection, AWSC = all-way stop-controlled intersection

Source: Fehr & Peers, 2009.

4.3.3 Freeway Analysis

Near-Term No Project and Plus Project freeway operations were evaluated for the weekday PM and Saturday peak hours. I-205 widening to six lanes is currently under construction and was assumed in the Near-Term analysis. Freeway segment LOSs are summarized in Table 4-3. As shown, all study freeway segments are anticipated to operate acceptably under Near-term No Project and Plus Project Conditions. The HCM calculation worksheets can be found in Appendix D.

TABLE 4-3
NEAR-TERM (2015) FREEWAY SEGMENT LEVEL OF SERVICE

Segment	Direction of Travel	Peak Hour	# of Lanes	No Project			Plus Project		
				Volume	Density[1]	LOS	Volume	Density[1]	LOS
I-80: West of Tracy Boulevard	Eastbound	PM SAT	3	2,870 2,870	15.8 15.5	B B	2,874 3,024	15.8 16.4	B B
I-80: West of Tracy Boulevard	Westbound	PM SAT	3	2,370 3,090	13.1 17.0	B B	2,372 3,149	13.1 17.3	B B
I-80: East of Tracy Boulevard	Eastbound	PM SAT	3	3,020 2,990	16.7 16.2	B B	3,028 3,259	16.7 17.6	B B
I-80: East of Tracy Boulevard	Westbound	PM SAT	3	2,640 3,230	14.6 17.7	B B	2,657 3,933	14.7 21.6	B C

Note:
1. Density measured in passenger cars per mile per lane

Source: Fehr & Peers, 2009.

4.4 NEAR-TERM (2015) IMPACTS AND MITIGATION MEASURES

The proposed project would have the following Near-Term significant impacts.

Impact 4-1: Larch Road/Corral Hollow Road (Intersection #1)

The addition of project traffic would cause the westbound approach of the Larch Road/Corral Hollow Road intersection to degrade from LOS B to LOS E, as well as cause the intersection to meet the peak hour signal warrant. This is a significant impact.

Mitigation 4-1: The following mitigation measures would improve operations at the Larch Road/Corral Hollow Road intersection to an acceptable level:

- Widen the westbound approach to provide a shared left-turn/through lane and a right-turn lane. Or
- Install traffic signal. Optimize signal timings to allow for split eastbound and westbound signal phasing. An evaluation of all applicable signal traffic warrants should be

conducted and additional factors (e.g., congestion, approach conditions, driver confusion) should be considered before the decision to install a signal is made.

The study intersection is under San Joaquin County jurisdiction. The City of Tracy would be responsible for the intersection improvement, acquisition of right-of-way, administering a Finance and Implementation Plan, and the construction. However, the County of San Joaquin would need to approve the design and construction of proposed intersection improvements.

Significance After Mitigation: Significant and unavoidable if the County does not approve proposed improvements. Less then significant if the County approves the proposed improvements. The intersection would operate at LOS C with 16 seconds of delay for the westbound approach during the PM peak hour and at LOS D with 25 seconds of delay for the eastbound approach during the Saturday peak hour as a side-street stop controlled intersection. If the intersection becomes signalized, it would operate at LOS B during the PM and Saturday peak hours, with 13 and 17 seconds of delay, respectively.

Impact 4-2: Larch Road/Tracy Boulevard (Intersection #4)

The addition of project traffic would cause the intersection of Larch Road/Tracy Boulevard to degrade from LOS B to LOS F during the Saturday peak hour, as well as cause the intersection to meet the peak hour signal warrant. This is a significant impact.

Mitigation 4-2: The following mitigation measures would improve operations at the Larch Road/Tracy Boulevard intersection to an acceptable level:

- Install traffic signal and optimize signal timings during the PM and Saturday peak hour. Optimization of traffic signal timings shall include determination of green time allocation for each intersection approach relative to the approach traffic volumes.

The proposed project would fund the improvements. The City of Tracy would be responsible for determining and administering a Finance and Implementation Plan.

Significance After Mitigation: Less then significant. The intersection would operate at LOS B with 14 seconds of average delay during the PM peak hour and at LOS D with 42 seconds of average delay during the Saturday peak hour.

4.4.1 Non-Impacted Locations Operating Unacceptably

The following three intersections also operate unacceptably with and without the project:

- Grant Line Road/Tracy Boulevard (Intersection #7) would operate at LOS D during the PM and Saturday peak hours
- Eleventh Street/Corral Hollow Road (Intersection #10) would operate at LOS D during the PM and Saturday peak hours
- Eleventh Street/Tracy Boulevard (Intersection #11) would operate at LOS D during the PM peak hour

The project would add traffic to these two intersections during the PM and Saturday peak hours and would slightly increase the delay. Even so, the added project traffic would not increase either of the intersections overall average delay by more then four seconds; therefore, project impacts at these three intersections would be less then significant.

4.5 PROJECT PHASING ANALYSIS

A project phasing analysis was performed to determine the amount of development that can be built on the active sports park area with only one driveway on Tracy Boulevard and without creating significant impacts on the surrounding roadway network under Near-term (2015) Conditions. The project is anticipated to generate the largest number of trips during the Saturday peak hour; therefore the phasing analysis was only performed for near-term (2015) Saturday peak hour conditions. It was determined that the following number of fields could be built on the active sports park area without resulting in significant impacts at any study locations:

- Up to 11 soccer fields
- Any combination of baseball and softball fields that total up to 11 fields
- Up to 4 football fields

The trips generated by the amount of land use mentioned above are summarized in Table 4-4. As shown in Table 4-4, soccer season and baseball/softball season would generate a total of 704 Saturday peak hour trips with 11 operating fields; football season would generate 512 Saturday peak hour trips with 4 operating fields. The trip distribution assumptions discussed in Chapter 3 was used to assign the trips generated by 11 soccer fields (or 11 baseball/softball fields) throughout the study intersections.

TABLE 4-4
PHASING ANALYSIS TRIP GENERATION

Individual Use	Amount	Saturday[1]		
		In	Out	Total
Soccer Season	11 Fields	352	352	704
Baseball/Softball Season	11 Fields	352	352	704
Football Season	4 Fields	256	256	512

Notes:
1. Refer to Appendix E for trip generation rates and assumptions

Source: *Trip Generation (8th Edition),* ITE, 2008; and Fehr & Peers, 2009.

Building additional soccer fields (and/or baseball/softball fields) would result in unacceptable operations at the all-way stop controlled intersection of Larch Road and Tracy Boulevard, thus resulting in a need for intersection improvements. Intersection LOS results for the project trips generated by building up to 11 soccer fields, 11 baseball and softball fields, and 4 football fields are shown in Table 4-5. The following two intersections operate unacceptably with and without the project during the Saturday peak hour:

- Grant Line Road/Tracy Boulevard (intersection #7) would operate at LOS D
- Eleventh Street/Corral Hollow Road (intersection #10) would operate at LOS D

The project would add traffic to these two intersections during the Saturday peak hour and would slightly increase the delay. Even so, the added project traffic would not increase either of the intersections overall average delay by more then four seconds; therefore, project impacts at these three intersections would be less then significant.

TABLE 4-5
PHASING ANALYSIS PEAK HOUR INTERSECTION LEVELS OF SERVICE

Intersection		Control[1]	Peak Hour	Delay [2] (in seconds)	LOS
1.	Larch Road/Corral Hollow Road	SSSC	SAT	7 (14)	A (B)
2.	West Valley Mall/Corral Hollow Road	Signal	SAT	18	B
3.	Grant Line Road/Corral Hollow Road	Signal	SAT	32	C
4.	Larch Road/Tracy Boulevard	AWS	SAT	28	D
5.	I-205 Westbound Ramps/Tracy Boulevard	Signal	SAT	20	B
6.	I-205 Eastbound Ramps/Tracy Boulevard	Signal	SAT	15	B
7.	Grant Line Road/Tracy Boulevard	Signal	SAT	**37**	**D**
8.	Larch Road/Holly Drive	SSSC	SAT	6 (11)	A (B)
9.	Grant Line Road/Holly Drive	Signal	SAT	17	B
10.	Eleventh Street/Corral Hollow Road	Signal	SAT	**44**	**D**
11.	Eleventh Street/Tracy Boulevard	Signal	SAT	25	C
12.	Eleventh Street/Holly Drive	Signal	SAT	18	B
13.	Project Driveway/Tracy Boulevard	SSSC	SAT	7 (12)	A (B)

Note: Results in **bold** represent unacceptable levels of service.

1. Signal = signalized intersection, SSSC = side street stop controlled intersection, AWSC = all-way stop-controlled intersection
2. For side-street stop-controlled intersections, delay is reported as: Intersection average (worst case approach).

Source: Fehr & Peers, 2009.

CHAPTER 5. CUMULATIVE TRAFFIC CONDITIONS

A Cumulative Conditions analysis was performed to identify potential impacts in year 2030. The analysis period corresponds to City of Tracy General Plan build out. Roadway assumptions and associated traffic forecasts plus the results of the intersection and freeway segment operations analysis, both with and without the project, are presented in this chapter.

5.1 CUMULATIVE (2030) ROADWAY ASSUMPTIONS

The future cumulative roadway network includes certain roadway improvements, consistent with the City's General Plan, that support the level of development anticipated to be in place in 2030. Major improvements included under Cumulative Conditions are:

- *I-205:* Widen to 8 lanes between I-580 and I-5.
- *I*-580: Widen to 8 lanes from Mountain House Parkway to Alameda County line.
- *Corral Hollow Road:* Widen to 4 lanes south of Schulte Road and between Kavanagh Avenue and Larch Road; and to 6 lanes between Schulte Road and Kavanagh Avenue.
- *Larch Road:* Widen to 4 lanes west of Tracy Boulevard.
- *Tracy Boulevard:* Widen to 4 lanes between Valpico Road and Linne Road.
- *Grant Line Road:* Widen to 6 lanes west of Tracy Boulevard.
- *Eleventh Street:* Widen to 6 lanes west of Lammers Road.
- *Lammers Road:* Extend south to new interchange with I-580; widen to 6 lanes; realign north of Eleventh Street to new interchange with I-205.
- *MacArthur Drive:* Widen to 4 lanes between Schulte Road and Valpico Road.
- *Valpico Road:* Widen to 4 lanes between Lammers Road and MacArthur Drive.
- *Schulte Road:* Extend west on new alignment to Mountain House Parkway; widen to 6 lanes between Corral Hollow Road and Tracy Boulevard.

I-205 widening to eight lanes is a "Tier I" project in SJCOG's 2007 Regional Transportation Plan. The other major improvements listed above are elements of the City's Roadway Master Plan that are projected to be necessary to support the level of development assumed to be in place under future 2030 conditions. The new I-205/Lammers Road interchange design and supporting network is currently under study and review by Caltrans. Similar to the Tracy General Plan EIR traffic analysis, this analysis assumes Alternative 5A, as defined in the I-205/Lammers Road Interchange Project Study Report (PSR)[2], will be constructed.

[2] Project Study Report – Route 205/Lammers Road Interchange (Caltrans, January 2006).

5.1.1 Cumulative Intersection Improvements

Selected intersection improvements were assumed to occur by 2030 as summarized in Table 5-1. The intersection improvements at Grant Line Road/Corral Hollow Road and Eleventh Street/Corral Hollow Road were identified baseline improvements in the transportation impact analysis report for the Ellis Specific Plan, which is an approved City of Tracy project. The intersection of West Valley Mall/Corral Hollow Road was assumed to be widened to provide an additional northbound and southbound through lane to be consistent with the Corral Hollow Road widening currently being planned. No improvements over existing lane configurations and traffic controls were assumed at the remaining study intersections. Cumulative intersection operating conditions were assessed with improvements at the intersections listed in Table 5-1 and the existing lane configurations for the remaining study intersections. Cumulative intersection lane configurations and traffic controls are shown on Figure 5-1.

TABLE 5-1
CUMULATIVE INTERSECTION IMPROVEMENTS

Study Intersection	Added Signal?	Lane Geometry Changes
2. West Valley Mall/Corral Hollow Road	No (already signalized)	• Widen NB approach to add NB thru lane • Widen SB approach to add SB thru lane
3. Grant Line Road/Corral Hollow Road	No (already signalized)	• Widen EB approach to add 1 LT & 1 Thru lane • Widen WB approach to provide 2 LT, 3 Thru, & 1 RT lane • Reduce NB LT lanes from 3 to 2, and add 1 Thru lane • Widen SB approach to provide 2 LT, 3 Thru, & 1 RT lane • Convert EB RT lane from permitted to free
10. Eleventh Street/Corral Hollow Road	No (already signalized)	• Widen NB approach to add 1 Thru lane • Widen SB approach to add 1 Thru lane • Convert WB RT lane from permitted to free

Notes:
EB = Eastbound; WB = Westbound; NB = Northbound; SB = Southbound
LT = Left-turn; RT = Right-turn; TR = Through-Right; TL = Through-Left
Source: Fehr & Peers, 2009

5.2 CUMULATIVE (2030) FORECASTS

The cumulative land use scenario was developed in consultation with City staff. Within the Tracy Planning Area, the development assumptions used are consistent with the City's General Plan envisioned development through 2030. Outside of the Tracy Planning Area, the development assumptions used in preparing the traffic forecasts are consistent with the 2030 scenario of the SJCOG traffic model, as updated for the 2007 Regional Transportation Plan. With City direction, motor sport race tracks that potentially may be developed on City property just north to the project site were included in the cumulative scenario. The assumptions and trip generation rates used for the motor sport race tracks are described in Appendix E. Trip generation and distribution assumptions for the race tracks were based on very limited development description, therefore it is recommended that more detailed estimates be used for future studies, as more detailed information becomes available.

5.2.1 Cumulative No Project Traffic

Cumulative No Project intersection forecasts were developed by adding the model growth between the base year City of Tracy General Plan Traffic Model and the adjusted 2030 model to the existing intersection counts. Cumulative No Project weekday PM and Saturday peak hour turning movement and freeway volumes were developed using the three-step process used for the Near-Term No Project forecasts. Cumulative No Project forecasts are shown on Figure 5-2.

5.2.2 Cumulative Plus Project Traffic

Based on the trip generation and distribution assumptions, trips expected to be generated by the Project under Cumulative Conditions were assigned through the study intersections. The cumulative project peak hour trip assignment for each study intersection is shown on Figure 3-4. Cumulative Plus Project peak hour traffic forecasts were developed by adding the assigned project trips at each study intersection to the Cumulative No Project forecasts. Cumulative Plus Project peak hour traffic forecasts are shown on Figure 5-3.

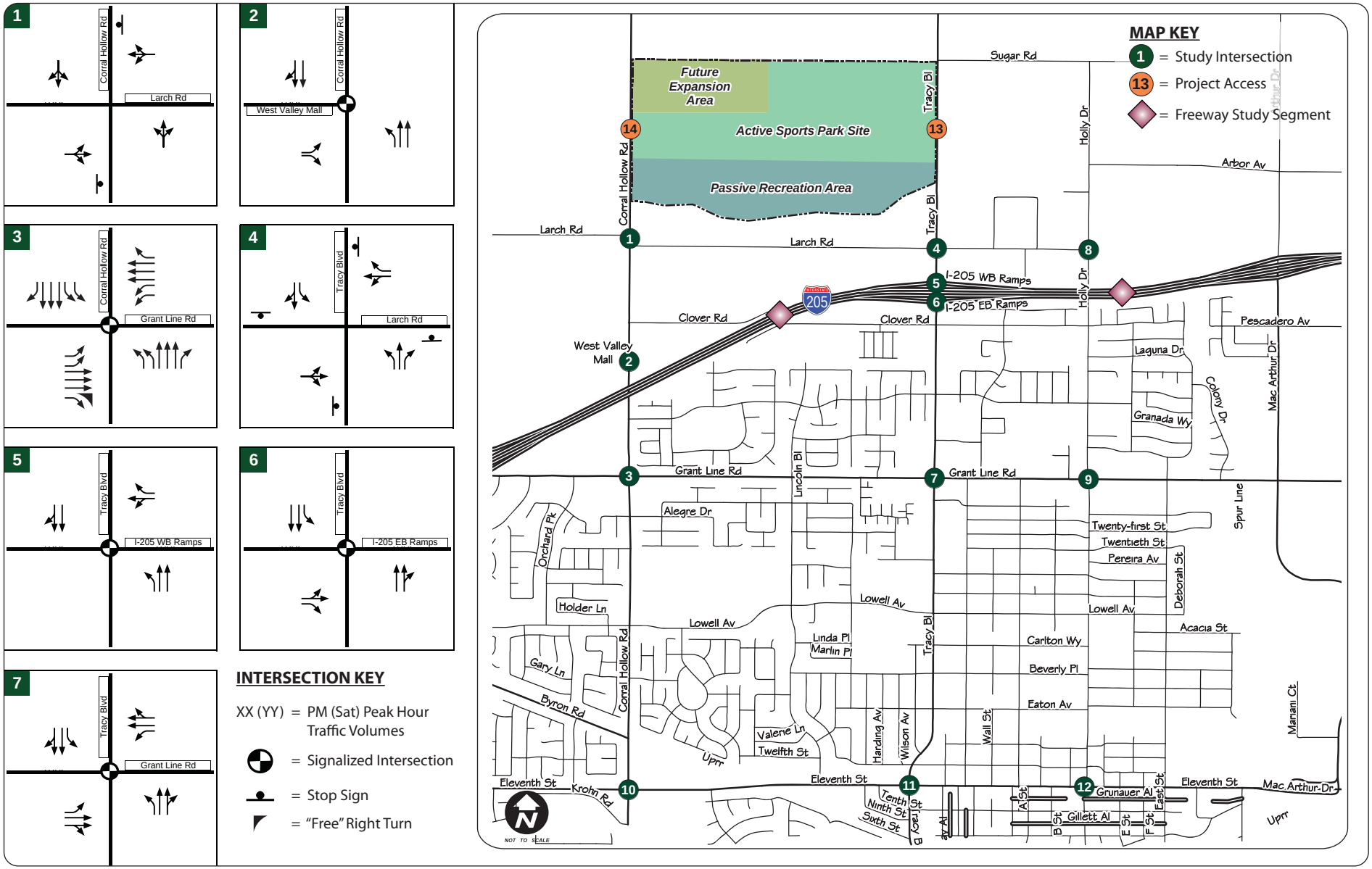

Holly Sugar Sports Park EIR

FEHR & PEERS
TRANSPORTATION CONSULTANTS

May 2009
Graphics\Report Graphics\WC08-2605_5-1A

CUMULATIVE (2030)
INTERSECTION LANE CONFIGURATIONS AND TRAFFIC CONTROLS

FIGURE 5-1A

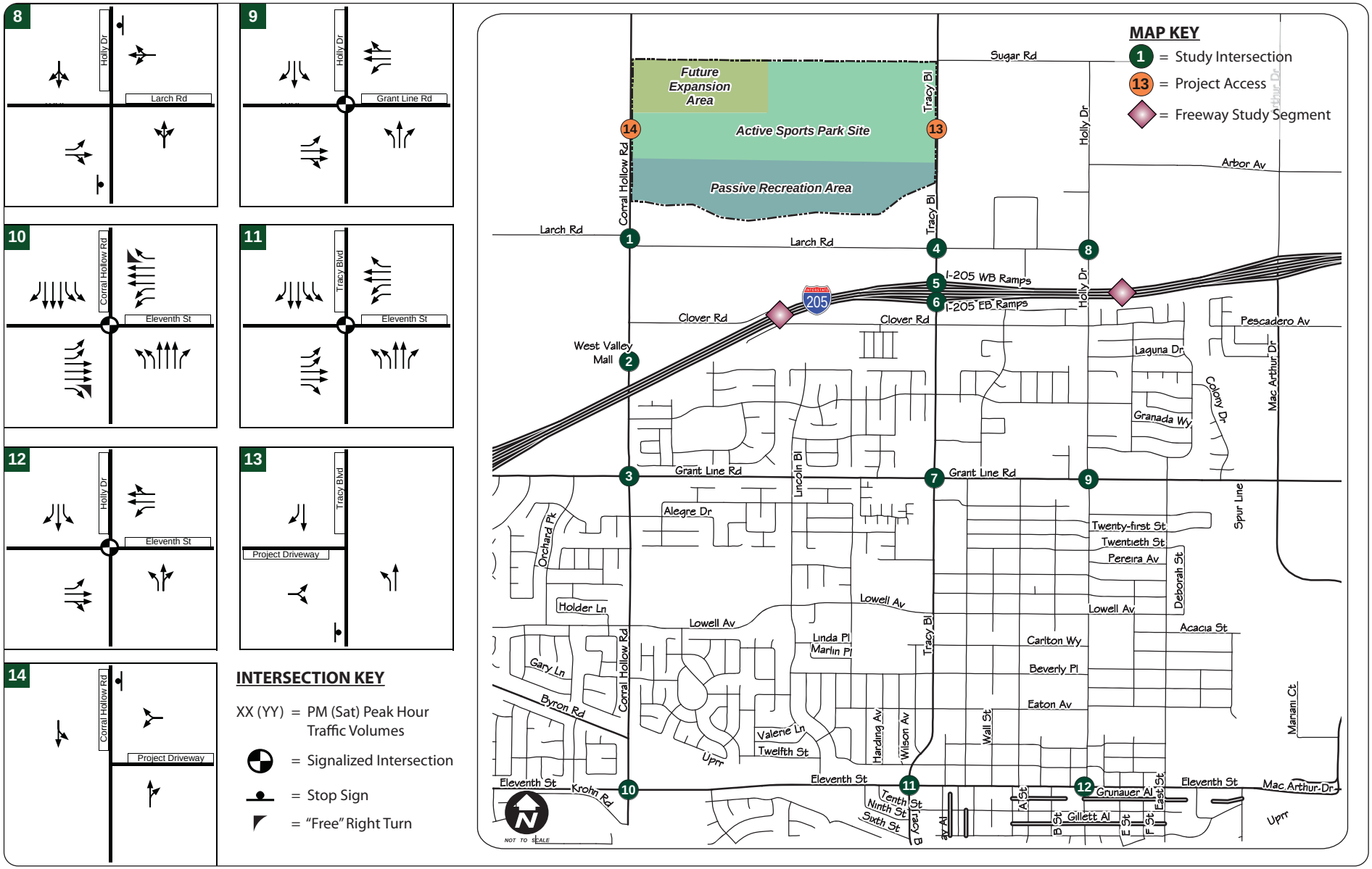

Holly Sugar Sports Park EIR

FEHR & PEERS
TRANSPORTATION CONSULTANTS

May 2009
Graphics\Report Graphics\WC08-2605_5-1B

CUMULATIVE (2030)
INTERSECTION LANE CONFIGURATIONS AND TRAFFIC CONTROLS

FIGURE 5-1B

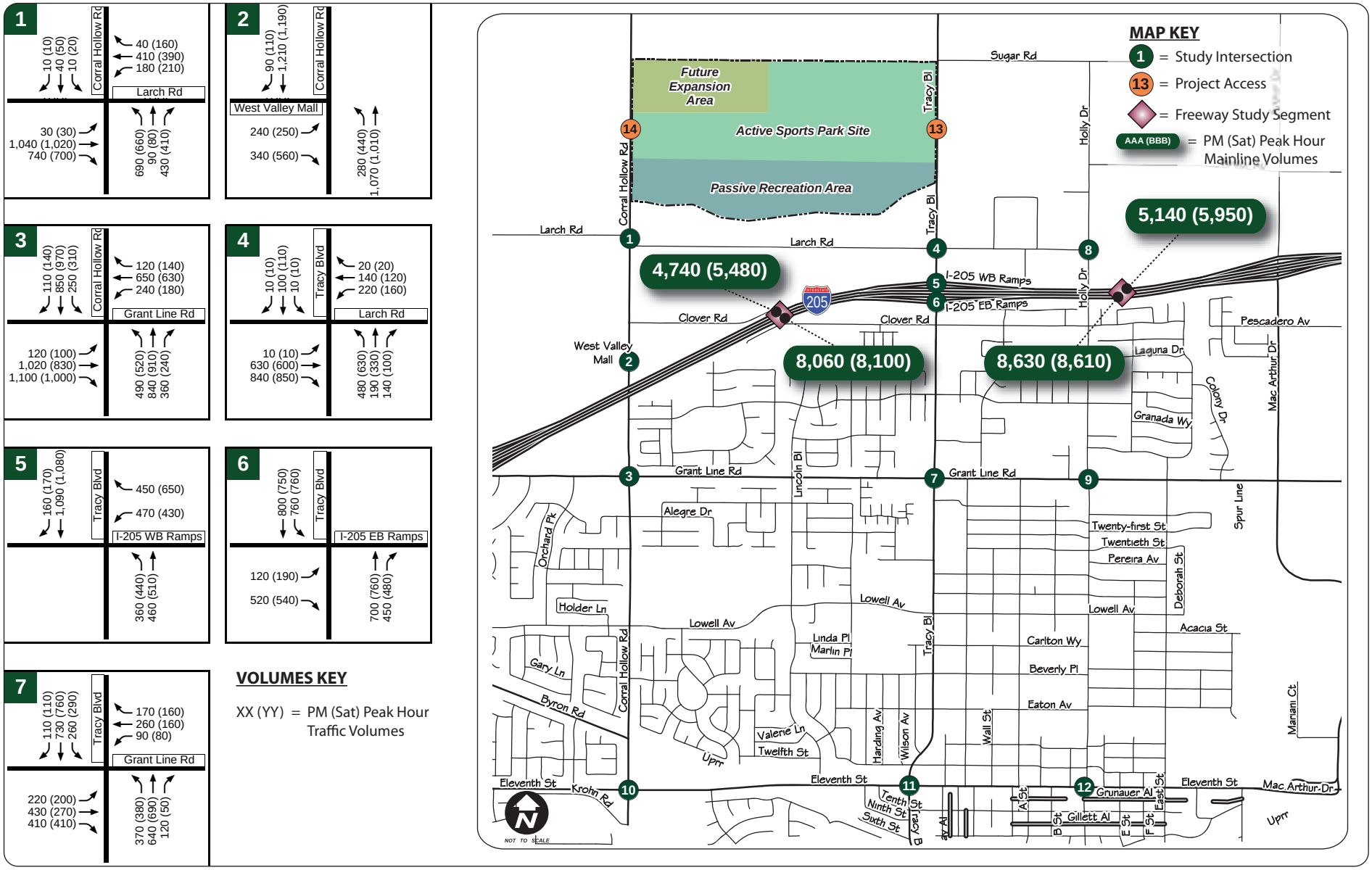

Holly Sugar Sports Park EIR

FEHR & PEERS
TRANSPORTATION CONSULTANTS

May 2009
Graphics\Report Graphics\WC08-2605_5-2A

CUMULATIVE NO PROJECT PEAK HOUR TRAFFIC VOLUMES

FIGURE 5-2A

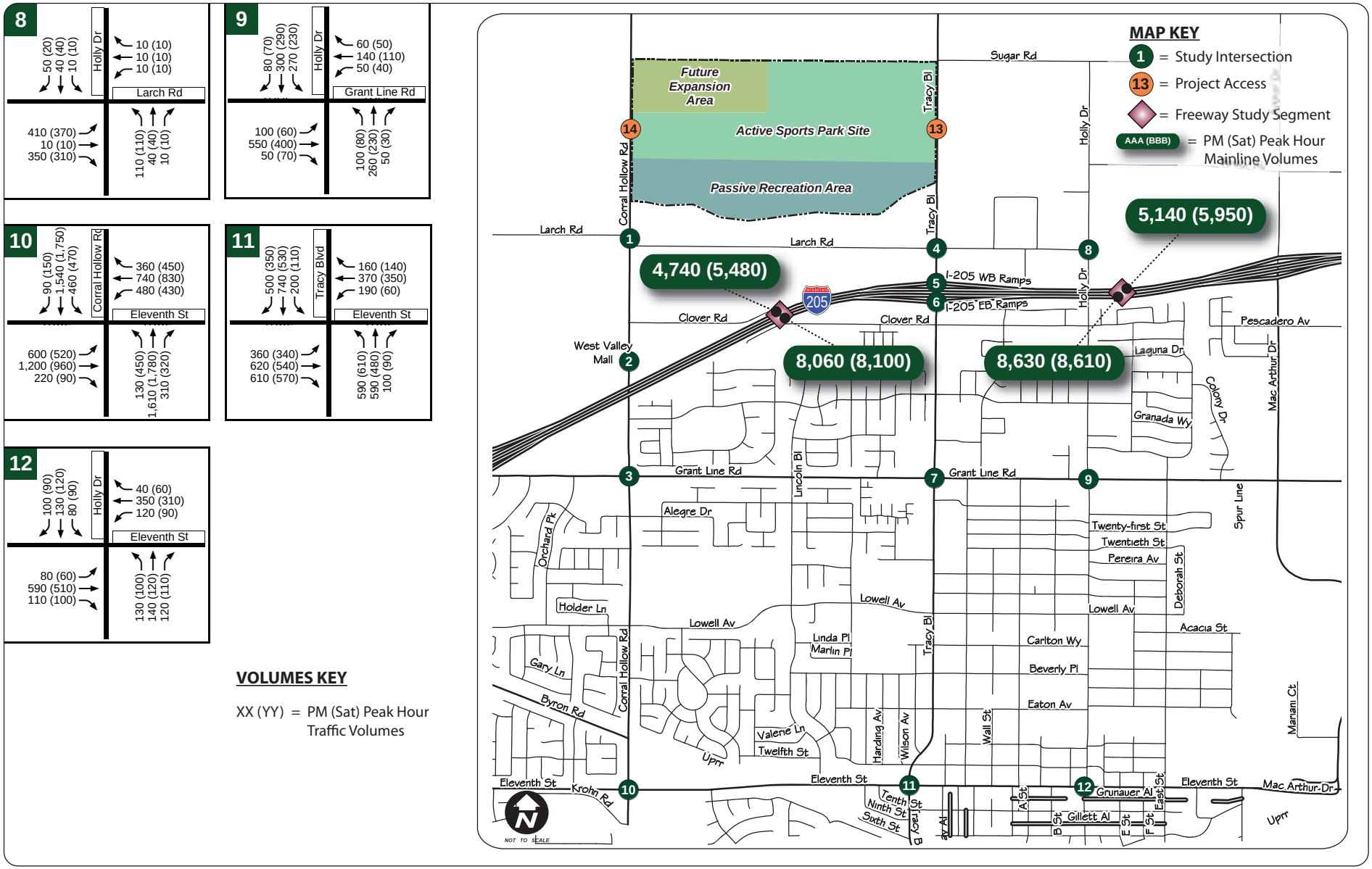

Holly Sugar Sports Park EIR

FEHR & PEERS
TRANSPORTATION CONSULTANTS

May 2009
Graphics\Report Graphics\WC08-2605_5-2B

CUMULATIVE NO PROJECT PEAK HOUR TRAFFIC VOLUMES

FIGURE 5-2B

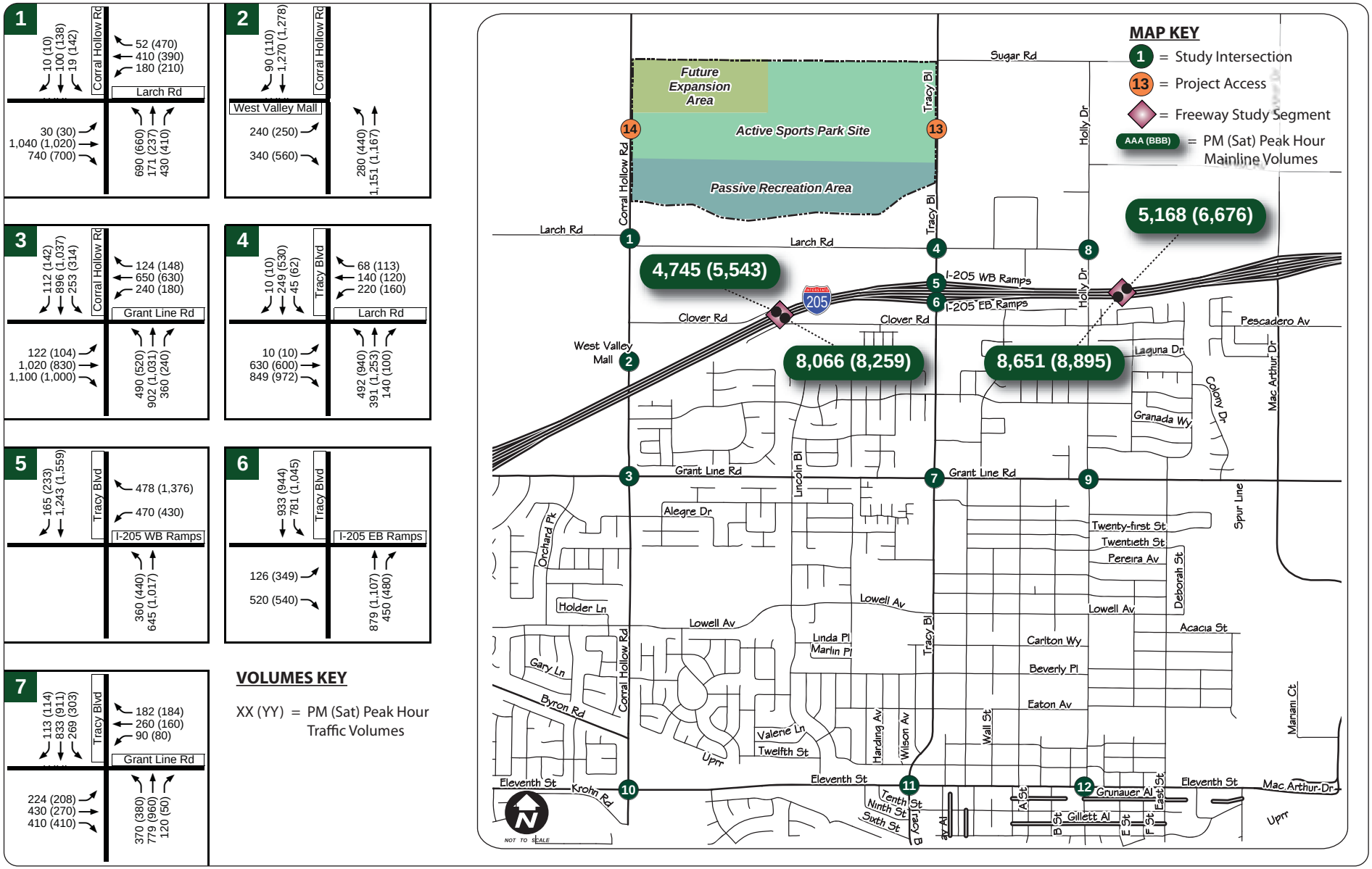

Holly Sugar Sports Park EIR

FEHR & PEERS
TRANSPORTATION CONSULTANTS

May 2009
Graphics\Report Graphics\WC08-2605_5-3A

CUMULATIVE PLUS PROJECT PEAK HOUR TRAFFIC VOLUMES

FIGURE 5-3A

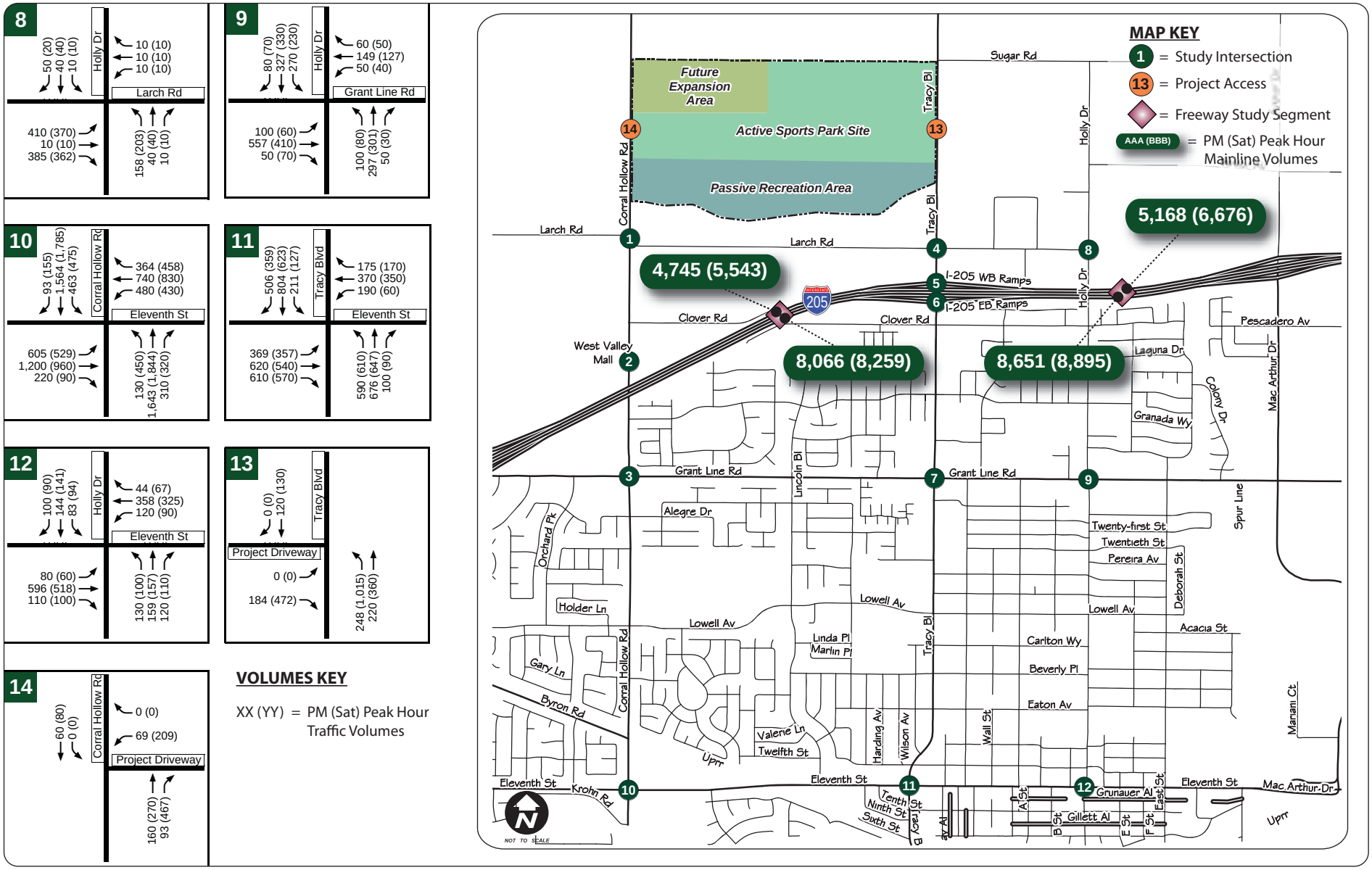

Holly Sugar Sports Park EIR

FEHR & PEERS
TRANSPORTATION CONSULTANTS

May 2009
Graphics\Report Graphics\WC08-2605_5-3B

CUMULATIVE PLUS PROJECT PEAK HOUR TRAFFIC VOLUMES

FIGURE 5-3B

5.3 ANALYSIS OF CUMULATIVE (2030) CONDITIONS

The intersection and freeway segment operation analyses for Cumulative (2030) Conditions were performed using the same methodologies discussed previously.

5.3.1 Intersection Operations

Cumulative intersection operations were evaluated using the lane configurations and traffic controls shown on Figure 5-1. The cumulative intersection analysis results are presented in Table 5-2. As shown, all study intersections are projected to operate at acceptable service levels under Cumulative No Project Conditions except the following:

- Larch Road/Corral Hollow Road operates at LOS F during the PM and Saturday peak hours
- Larch Road/Tracy Boulevard operates at LOS F during the PM and Saturday peak hours
- I-205 Westbound Ramps/Tracy Boulevard operates at LOS E during the PM and Saturday peak hours
- I-205 Eastbound Ramps/Tracy Boulevard operates at LOS F during the PM and Saturday peak hours
- Grant Line Road/Tracy Boulevard operates at LOS D during the PM and Saturday peak hours
- Eleventh Street/Corral Hollow Road operates at LOS E during the PM and Saturday peak hours
- Eleventh Street/Tracy Boulevard operates at LOS during the PM peak hour

With the addition of project traffic, the intersection of Larch Road/Holly Drive operates unacceptably in addition to the seven intersections mentioned above. Under Cumulative Plus Project Conditions, this intersection operates at an overall LOS E (and the eastbound approach operates at LOS F) during the PM and Saturday peak hours. The project driveways are projected to operate at good levels with stop sign control under Cumulative Conditions. The LOS calculation worksheets for the Cumulative No Project and Cumulative Plus Project scenarios are provided in Appendix B.

TABLE 5-2
CUMULATIVE (2030) PEAK HOUR INTERSECTION LEVELS OF SERVICE

Intersection		Control[1]	Peak Hour	No Project		Plus Project	
				Delay [2] (in seconds)	LOS	Delay [2] (in seconds)	LOS
1.	Larch Road/Corral Hollow Road	SSSC	PM SAT	**>50 (>50)** **>50 (>50)**	**F (F)** **F (F)**	**>50 (>50)** **>50 (>50)**	**F (F)** **F (F)**
2.	West Valley Mall/Corral Hollow Road	Signal	PM SAT	20 29	B C	21 33	C C
3.	Grant Line Road/Corral Hollow Road	Signal	PM SAT	33 32	C C	33 34	C C
4.	Larch Road/Tracy Boulevard	AWS	PM SAT	**>50** **>50**	**F** **F**	**>50** **>50**	**F** **F**
5.	I-205 Westbound Ramps/Tracy Boulevard	Signal	PM SAT	**55** **64**	**E** **E**	**71** **>100**	**E** **F**
6.	I-205 Eastbound Ramps/Tracy Boulevard	Signal	PM SAT	**>100** **>100**	**F** **F**	**>100** **>100**	**F** **F**
7.	Grant Line Road/Tracy Boulevard	Signal	PM SAT	**47** **44**	**D** **D**	**51** **46**	**D** **D**
8.	Larch Road/Holly Drive	SSSC	PM SAT	22 (28) 16 (20)	C (D) C (C)	**38 (>50)** **38 (>50)**	**E (F)** **E (F)**
9.	Grant Line Road/Holly Drive	Signal	PM SAT	26 22	C C	27 23	C C
10.	Eleventh Street/Corral Hollow Road	Signal	PM SAT	**59** **61**	**E** **E**	**60** **65**	**E** **E**
11.	Eleventh Street/Tracy Boulevard	Signal	PM SAT	**56** 32	**E** C	**58** 33	**E** C
12.	Eleventh Street/Holly Drive	Signal	PM SAT	29 21	C C	30 22	C C
13.	Project Driveway/Tracy Boulevard	SSSC	PM SAT	n/a	--	5 (10) 11 (14)	A (B) B (B)
14.	Project Driveway/Corral Hollow Road	SSSC	PM SAT	n/a	--	2 (11) 5 (21)	A (B) A (C)

Note: Results in **bold** represent unacceptable levels of service.

1. Signal = signalized intersection, SSSC = side street stop controlled intersection, AWSC = all-way stop-controlled intersection
2. For side-street stop-controlled intersections, delay is reported as: Intersection average (worst case approach).

Source: Fehr & Peers, 2009.

5.3.2 Peak Hour Traffic Signal Warrant Analysis

The peak hour volume traffic signal warrant (Warrant 3) for urban conditions, found in the *Manual of Uniform Traffic Control Devices* (MUTCD) (Federal Highway Administration, 2000), was evaluated for the unsignalized intersections in the study area, as shown in Table 5-3. The urban conditions peak hour traffic signal warrant was evaluated because the areas surrounding the three unsignalized intersections along Larch Road are expected to be developed by 2030. As shown in Table 5-3, all three study intersections along Larch Road meet the peak hour signal warrant under Cumulative No Project

Conditions. With the addition of project traffic, all unsignalized study intersections except the project driveway intersection at Corral Hollow Road meet the peak hour signal warrant.

The intersections along Larch Road at Corral Hollow Road and Tracy Boulevard are projected to operate unacceptably during the Saturday peak hour with the addition of project traffic. Even though the project driveway intersection at Tracy Boulevard meets the peak hour signal warrant, it is expected to operate at an acceptable level of service during the PM and Saturday peak hours. An evaluation of all applicable warrants should be conducted and additional factors (e.g., congestion, approach conditions, driver confusion) should be considered before the decision to install a signal is made. Detailed signal warrant calculations are provided in Appendix C.

TABLE 5-3
CUMULATIVE (2030) PEAK HOUR SIGNAL WARRANT ANALYSIS

Intersection		Control[1]	Without Project	Plus Project
			Peak Hour Warrant Met?	Peak Hour Warrant Met?
1.	Larch Road/Corral Hollow Road	SSSC	**YES**	**YES**
4.	Larch Road/Tracy Boulevard	AWS	**YES**	**YES**
8.	Larch Road/Holly Drive	SSSC	**YES**	**YES**
13.	Project Driveway/Tracy Boulevard	SSSC	**--**	**YES**
14.	Project Driveway/Corral Hollow Road	SSSC	**--**	NO

Note:
1. SSSC = side-street stop-controlled intersection, AWSC = all-way stop-controlled intersection

Source: Fehr & Peers, 2009.

5.3.3 Baseline Cumulative Improvements

As shown in Table 5-2, several of the study intersections would not be able to accommodate cumulative traffic growth consistent with build out of the General Plan prior to the addition of project traffic. Only the three study intersections along Holly Drive are expected to accommodate anticipated baseline Cumulative growth with existing lane configuration and traffic controls. Fehr & Peers identified improvements for six of the twelve study intersections to accommodate additional traffic volumes associated with cumulative growth; these improvements are summarized in Table 5-4. Improvements were not identified for the other intersections as they are built out and adding lanes would not be feasible.

TABLE 5-4
INTERSECTION IMPROVEMENTS TO SUPPORT CUMULATIVE TRAFFIC GROWTH

Study Intersection	Added Signal?	Lane Geometry and Traffic Control Changes[1]
1. Larch Road/Corral Hollow Road	Yes	• Widen EB approach to provide 1 LT, 2 Thru, & 1 RT lane • Widen WB approach to provide 1 LT, 1 Thru, & 1 TR lane • Widen NB approach to provide 2 LT, 1 Thru, & 1 RT lane • Widen SB approach to provide 1 LT & 1 TR lane • Optimize signal timings
4. Larch Road/Tracy Boulevard	Yes	• Widen EB approach to provide 1 LT, 1 Thru, & 1 free RT • Widen WB approach to provide 1 LT and 1 TR lane • Widen NB approach to add a second LT lane • Optimize signal timings
5. I-205 WB Ramps/Tracy Boulevard	No (already signalized)	• Widen NB approach to add second LT lane • Widen WB approach to provide 1 LT, 1 LTR, & 1 RT lane • Optimize signal timings
6. I-205 EB Ramps/Tracy Boulevard	No (already signalized)	• Widen SB approach to add second LT lane • Optimize signal timings
7. Grant Line Rd/Tracy Boulevard	No (already signalized)	• Widen NB approach to add second LT lane • Widen SB approach to add second LT lane • Widen EB approach to provide 1 LT, 2 Thru, & 1 free RT lane
11. Eleventh Street/Tracy Boulevard[2]	No (already signalized)	• Convert SB RT lane from permitted to free • Convert EB RT lane from permitted to free • Optimize signal timings

Notes:

1. EB = Eastbound; WB = Westbound; NB = Northbound; SB = Southbound
   LT = Left-turn; RT = Right-turn; TR = Through-Right; TL = Through-Left; LTR = Left-Through-Right
2. Improvements listed only achieve LOS D operations. At-grade intersection improvements resulting in LOS C operations are not feasible due to physical constraints that preclude it from further widening. The required Cumulative configuration of this intersection to operate at an acceptable LOS C is a grade-separated urban interchange.

Source: Fehr & Peers, 2009

5.3.4 Freeway Analysis

Cumulative No Project and Cumulative Plus Project freeway operations were evaluated for the weekday PM and Saturday peak hours. I-205 was assumed to be widened to eight lanes by 2030. Freeway segment LOS is summarized in Table 5-5. As shown, all study freeway segments are anticipated to operate acceptably under Cumulative No Project Conditions, except the following:

- Eastbound I-205 west of Tracy Boulevard operates at LOS E during the PM and Saturday peak hours
- Eastbound I-205 east of Tracy Boulevard operates at LOS E during the PM and Saturday peak hours

With the addition of project traffic, the westbound I-205 study segments would continue to operate acceptably and the eastbound study segments would also continue to operate at LOS E. The HCM calculation worksheets can be found in Appendix D.

TABLE 5-5
CUMULATIVE (2030) FREEWAY SEGMENT LEVEL OF SERVICE

Segment	Direction of Travel	Peak Hour	# of Lanes	Without Project			Plus Project		
				Volume	Density[1]	LOS	Volume	Density[1]	LOS
I-205: West of Tracy Boulevard	Eastbound	PM SAT	4	8,060 8,100	**36.5** **35.5**	**E** **E**	**8,066** **8,259**	**36.5** **36.8**	**E** **E**
I-205: West of Tracy Boulevard	Westbound	PM SAT	4	4,740 5,480	19.2 22.1	C C	4,745 5,543	19.2 22.3	C C
I-205: East of Tracy Boulevard	Eastbound	PM SAT	4	8,630 8,610	**42.2** **40.2**	**E** **E**	**8,651** **8,895**	**42.5** **43.4**	**E** **E**
I-205: East of Tracy Boulevard	Westbound	PM SAT	4	5,140 5,950	20.8 24.0	C C	5,168 6,676	20.9 27.3	C D

Note:
1. Density measured in passenger cars per mile per lane

Source: Fehr & Peers, 2009.

5.4 CUMULATIVE (2030) IMPACTS AND MITIGATION MEASURES

The proposed project would have the following Cumulative significant impacts.

Impact 5-1: Larch Road/Corral Hollow Road (Intersection #1)

The intersection of Larch Road/Corral Hollow Road would operate at LOS F during the PM and Saturday peak hours under both Cumulative No Project and Cumulative Plus Project Conditions. This is a significant impact because the project would increase the overall intersection volume by more then five percent during the Saturday peak hour, in addition to meeting the peak hour traffic signal warrant.

Mitigation 5-1: The following mitigation measures would improve operations at the Larch Road/Corral Hollow Road intersection to an acceptable level:

- Provide intersection improvements needed to accommodate cumulative background growth; these improvements are listed in Table 5-4. The addition of project traffic would not require additional improvements, aside from those listed in Table 5-4, to meet the LOS D standard.

The study intersection is under San Joaquin County jurisdiction. The City of Tracy would be responsible for the project's fair share of the intersection improvement, acquisition of right-of-way, administering a Finance and Implementation Plan, and the construction. However, the County of San Joaquin would need to approve the design and construction of proposed intersection

improvements. The weekday PM and Saturday peak hour project traffic volume contributions at this intersection are:

	PM Peak Hour	Saturday Peak Hour
Existing Traffic	515	387
Project Traffic	162	677
Cumulative Background Growth	3,195	3,353

Significance After Mitigation: Significant and unavoidable if the County does not approve proposed improvements. Less then significant if the County approves the proposed improvements. The intersection would operate at an acceptable LOS D during the PM and at Saturday peak hours with 42 and 43 seconds of average delay, respectively with the implementation of the mitigation measures.

Impact 5-2: Larch Road/Tracy Boulevard (Intersection #4)

The intersection of Larch Road/Tracy Boulevard would operate at LOS F during the PM and Saturday peak hours under Cumulative No Project and Plus Project Conditions. This is a significant impact because the project would increase the overall intersection volume by more then ten percent during the weekday PM and Saturday peak hours, in addition to meeting the peak hour traffic signal warrant.

Mitigation 5-2: The following mitigation measures would improve operations at the Larch Road/Tracy Boulevard intersection to an acceptable level:

- Provide intersection improvements needed to accommodate cumulative background growth; these improvements are listed in Table 5-4. The addition of project traffic would require additional improvements, aside from those listed in Table 5-4, to meet the LOS D standard:
    - Widen the eastbound approach to provide one left-turn lane, two through lanes with a 400 foot receiving/acceleration lane on eastbound Larch Road, and a free-right turn lane.
    - Widen the northbound approach to provide two left-turn lanes, two through lanes with a 400 foot receiving/acceleration lane on northbound Tracy Boulevard, and a right-turn lane.
    - Optimize signal timings.

The proposed project would fund its fair share of the improvements. The City of Tracy would be responsible for determining fair-share responsibilities and administering a Finance and Implementation Plan. The weekday PM and Saturday peak hour project traffic volume contributions at this intersection are:

	PM Peak Hour	Saturday Peak Hour
Existing Traffic	809	628
Project Traffic	454	1,920
Cumulative Background Growth	1,981	2,322

Significance After Mitigation: Less then significant. The intersection would operate at LOS C with 28 seconds of average delay during the PM peak hour and at LOS D with 51 seconds of average delay during the Saturday peak hour.

Impact 5-3: I-205 Westbound Ramps/Tracy Boulevard (Intersection #5)

The intersection of I-205 westbound Ramps/Tracy Boulevard would operate at LOS E during the PM and Saturday peak hour under Cumulative No Project Conditions. With the addition of project traffic, the intersection would continue to operate at LOS E during the PM peak hour and would degrade to LOS F during the Saturday peak hour. This is a significant impact because the project would increase the average intersection control delay by more then four seconds during the PM and Saturday peak hours.

Mitigation 5-3: The following mitigation measures would improve operations at the I-205 westbound Ramps/Tracy Boulevard intersection to an acceptable level:

- Widen northbound approach to provide a second left-turn lane
- Widen westbound approach to provide one left-turn lane, one shared through/left-turn lane, and one free right-turn lane

The proposed project would fund its fair share of improvements. The City of Tracy would be responsible for determining fair-share responsibilities and administering a Finance and Implementation Plan. The weekday PM and Saturday peak hour project traffic volume contributions at this intersection are:

	PM Peak Hour	Saturday Peak Hour
Existing Traffic	1,343	1,310
Project Traffic	371	1,775
Cumulative Background Growth	1,647	1,970

Significance After Mitigation: Less then significant. The intersection would operate at LOS B with 20 seconds of average delay during the PM peak hour and at LOS C with 33 seconds of average delay during the Saturday peak hour.

Impact 5-4: I-205 Eastbound Ramps/Tracy Boulevard (Intersection #6)

The intersection of I-205 eastbound Ramps/Tracy Boulevard would operate would operate at LOS F during the PM and Saturday peak hours under Cumulative No Project and Cumulative Plus Project Conditions. This is a significant impact because the project would increase the average intersection control delay by more then four seconds during the PM and Saturday peak hours.

Mitigation 5-4: The following mitigation measures would improve operations at the I-205 eastbound Ramps/Tracy Boulevard intersection to an acceptable level:

- Widen northbound approach to provide a two through lanes and a right-turn lane
- Widen southbound approach to provide two through lanes and two left-turn lanes
- Widen eastbound approach to provide one left-turn lane, one shared right-through lane, and one right-turn lane

The proposed project would fund its fair share of improvements. The City of Tracy would be responsible for determining fair-share responsibilities and administering a Finance and

Implementation Plan. The weekday PM and Saturday peak hour project traffic volume contributions at this intersection are:

	PM Peak Hour	Saturday Peak Hour
Existing Traffic	1,557	1,577
Project Traffic	339	985
Cumulative Background Growth	1,793	1,903

Significance After Mitigation: Less then significant. The intersection would operate at LOS C with 20 seconds of average delay during the PM peak hour and at LOS D with 45 seconds of average delay during the Saturday peak hour.

Impact 5-5: Larch Road/Holly Drive (Intersection #8)

The eastbound approach of the intersection of Larch Road/Holly Drive would operate at LOS D during the PM peak hour and at LOS C during the Saturday peak hour under Cumulative No Project Conditions. With the addition of project traffic, the eastbound approach operates at LOS F. This is a significant impact because the project would degrade the service level from LOS D to LOS F in the PM peak hour and LOS C to LOS F during the Saturday peak hour. The intersection also satisfies the peak hour signal warrant under Cumulative No Project and Plus Project Conditions.

Mitigation 5-5: The following mitigation measures would improve operations at the Larch Road/Holly Drive intersection to an acceptable level:

- Install traffic signal and optimize signal timings during the PM and Saturday peak hour. Optimization of traffic signal timings shall include determination of green time allocation for each intersection approach relative to the approach traffic volumes.

The proposed project would fund its fair share of improvements. The City of Tracy would be responsible for determining fair-share responsibilities and administering a Finance and Implementation Plan. The weekday PM and Saturday peak hour project traffic volume contributions at this intersection are:

	PM Peak Hour	Saturday Peak Hour
Existing Traffic	341	207
Project Traffic	83	145
Cumulative Background Growth	719	743

Significance After Mitigation: Less then significant. The intersection would operate at LOS A during the PM and at Saturday peak hours with 9 and 10 seconds of average delay, respectively.

5.4.1 Non-Impacted Locations Operating Unacceptably

The following three intersections also operate unacceptably with and without the project:

- Grant Line Road/Tracy Boulevard (Intersection #7) would operate at LOS D during the PM and Saturday peak hours
- Eleventh Street/Corral Hollow Road (Intersection #10) would operate at LOS E during the PM and Saturday peak hours

- Eleventh Street/Tracy Boulevard (Intersection #11) would operate at LOS E during the PM peak hour

The project would add traffic to these three intersections during the PM and Saturday peak hours and would slightly increase the delay. Even so, the added project traffic would not increase either of the intersections overall average delay by more then four seconds; therefore, project impacts at these three intersections would be less then significant.

The following two freeway segments also operate unacceptably with and without the project:

- Eastbound I-205 west of Tracy Boulevard operates at LOS E during the PM and Saturday peak hours

- Eastbound I-205 east of Tracy Boulevard operates at LOS E during the PM and Saturday peak hours

Even though the project would add traffic to the eastbound I-205 study segments, the added project traffic would not increase the baseline volume by more then five percent; therefore, project impacts at the eastbound freeway study segments would be less then significant.

CHAPTER 6. SITE ACCESS, CIRCULATION, AND PARKING

A preliminary site plan review was conducted to address project site access, on-site circulation, and parking for the conceptual site plan dated November 5, 2008. The site plan shows the conceptual design for the 166-acre active sports park but shows no details for the future expansion area. Therefore, the site plan review was conducted only for the active sports park area. When conceptual designs for the future expansion and passive-recreation areas become available, they should be reviewed with the same criteria:

- Designs for on-site circulation, access and parking areas should meet industry standard design guidelines
- The on-site parking supply for vehicles should be sufficient to meet typical parking demands
- Pedestrian, bicycle, and transit connections between on-site uses and adjacent streets and transit facilities should be provided and should meet industry standard design guidelines

Significant impacts are quantified and mitigation measures are identified to address the impacts. Consultant site plan recommendations are highlighted on Figure 6-1.

6.1 SITE ACCESS

Site access encompasses the intersections of the project site roadways/driveways to the public street system. A safe intersection has adequate sight distance, width and corner radii so drivers can safely maneuver through the intersection. Appropriate intersection traffic control is also a component of a safe intersection taking into account vehicle, pedestrian and bicycle traffic. Specialty treatments such as decorative pavers, curb extensions, safety lighting, pedestrian flashers or signing are also components that enhance safety and operational needs of the intersection.

The project has one vehicle access point to Tracy Boulevard and another to Corral Hollow Road. According to the site plan, a northbound left-turn lane and southbound right-turn lane is provided at the Tracy Boulevard driveway. The driveway does meet the peak hour traffic signal warrant under Near-Term and Cumulative Conditions, however it does operate acceptably under all future analysis scenarios.

<u>Consultant Recommendation 6-1</u>:

> The project applicant should consider designing the project driveway intersection at Tracy Boulevard to accommodate future traffic signal installation

According to the site plan, no turn pocket lanes are provided on the southbound and northbound approaches of Corral Hollow Road at the project driveway. The project driveway operates acceptably and does not meet the peak hour traffic signal warrant under all future study scenarios.

<u>Consultant Recommendation 6-2</u>:

> The project applicant should consider designing the project driveway intersection at Corral Hollow Road to accommodate one through lane and one right-turn lane at the northbound approach to allow more efficient access into the site from Corral Hollow Road.

Landscaping is shown on the site plan adjacent to each driveway. Improperly maintained landscaping adjacent to project driveways could limit driver visibility. Both driveways are connected via an east-west major internal circulation roadway that provides access to the parking aisles throughout the project site.

All driveways would provide for unrestricted access in and out of the project site, and all are shown as side-street stop-controlled on the conceptual site plan.

Consultant Recommendation 6-3:

> Maintain landscaping in areas near driveways to a height of less than 2 feet and tree braches trimmed to heights greater than 6 feet to provide sight distance visibility for drivers.

6.1.1 Emergency Vehicle Access

Factors such as proximity to fire stations, number of access points, and roadway width determine whether a project provides sufficient emergency access. Two fire stations are located near the project site. The first is located at 301 Grant Line Road, which is approximately 1 ¼ miles away and the second is located at 1701 Eleventh Street, which is approximately 2 ½ miles away from the project site. The proposed project provides two primary emergency vehicle access points, one at the Tracy Boulevard driveway and the other at the Corral Hollow driveway. No details for the future expansion area are provided on the conceptual, but it is recommended that direct emergency vehicle access to the potential building and facilities on the future expansion area be provided.

Consultant Recommendation 6-4:

> The project applicant should consider providing an additional emergency vehicle access point on Corral Hollow Road adjacent to the future expansion area.

The internal project roadways provide at least 26-feet of roadway width, adequate for emergency vehicle access. Given these considerations, the project provides sufficient emergency access.

6.1.2 Pedestrian Site Access

Pedestrian facilities are non-existent in the areas adjacent to the project site. The conceptual site plan provides no sidewalks along the project site frontage on Tracy Boulevard and Corral Hollow Road. The lack of sidewalks on Tracy Boulevard and Corral Hollow Road make it difficult for pedestrians to access the project site from neighborhoods south of the site. This is considered a potentially significant impact.

Consultant Recommendation 6-5:

> The project applicant shall provide sidewalks along project site frontage on Tracy Boulevard and Corral Hollow that extend to Larch Road. In addition, pedestrian access points that provide direct access to the active sports park, future expansion area, and the passive-recreation area should be provided on Tracy Boulevard and Corral Hollow Road.

6.1.3 Bicycle Site Access

Bicycle facilities are also non-existent in the areas adjacent to the project site. The conceptual site plan provides no bicycle facilities along the project site frontage on Tracy Boulevard and Corral Hollow Road. Neither the City nor County have developed plans that would potentially provide bicycle facilities on the segments of Tracy Boulevard and Corral Hollow Road adjacent to the project site. According to the City of Tracy 2005 *Bikeways Master Plan*, a Class III bicycle route is planned near the project site on Tracy Boulevard between Twelfth Street and Clover Road, but would not extend north of I-205.

Consultant Recommendation 6-6:

> The project applicant shall provide a Class III bike route along Tracy Boulevard that would connect to the planned Class III bike route at Clover Road. The recommended Class III route would also provide access to the existing Class III route on Larch Road, east of Tracy Boulevard.

6.1.4 Transit Access

Currently none of the transit agencies that serve Tracy provide service to the project site. Plans to extend transit service to the project site have not yet been developed. The conceptual site plan provides no transit stop facilities.

Consultant Recommendation 6-7:

> The project applicant should consider providing some transit facilities such as bus pull outs or future bus stop locations to accommodate transit operations if service is extended to the project site in the future.

6.2 ON-SITE CIRCULATION

Site circulation encompasses the roadways within and adjacent to the site that serve general vehicle circulation. Safe roadways provide adequate space for its designated/intended uses. Vehicle, parking and bicycle lane widths, curves and traffic control are all roadway features to consider in safe on-site roadway design. The conceptual site plan identifies perpendicular parking with two-way circulation.

6.2.1 Drive Aisles

The surface parking area provides one main east-west two-lane internal roadway that provides access to all parking aisles located throughout the project site. The major east-west circulation roadway is 40 feet wide and all parking aisles are at least 26 feet wide, which exceed the 24-foot minimum width generally needed for two-way travel and perpendicular parking.

6.2.2 Dead-End Drive Aisles

Dead-end drive aisles are parking aisles that are obstructed at one end thereby increasing navigational difficulty through the drive aisles. A dead-end drive aisle is shown on the conceptual site plan, which is provided at the 74-stall parking lot adjacent to the south of the proposed soccer/football stadium.

Consultant Recommendation 6-5:

> It is recommended that the site plan either be redesigned to eliminate dead end aisles or that a vehicle turnaround be provided.

6.2.3 Throat Depths

Throat depth refers to the length of continuous curb extending along a project driveway into the project site before a curb break is provided. The continuous curb prevents vehicle queues at the driveway from obstructing internal site circulation. About 130 feet of throat depth is provided at the Tracy Boulevard driveway and about 150 feet is provided at the Corral Hollow Road driveway. An intersection simulation analysis was conducted for the project driveways at Tracy Boulevard and Corral Hollow Road during the Saturday peak hour under Cumulative Plus Project Conditions. According to the simulation analysis, the average eastbound queue length during the Saturday peak hour at the Tracy Boulevard driveway is about 120 feet and the average westbound queue length at the Corral Hollow Road is about 80 feet. Therefore

the provided throat depths at the project driveways are generally sufficient to accommodate average exiting queue lengths during the weekday PM and Saturday peak hours.

6.2.4 Parking Stall Dimensions

City of Tracy requires that standard 90-degree-angle parking stalls be at least 18-feet long by 9-feet wide, with a minimum of 18-foot-wide drive aisles. Parking stalls throughout the site meet these design criteria with parking stalls 18.5-feet long by 9-feet wide and drive aisles at least 26-feet wide.

Bicycle Parking Stalls

City of Tracy requires that bicycle parking stalls be at least 5.5-feet long and 2.5-feet wide. Bicycle parking facilities shall be located in separate stall areas on surface parking lots and within 100-feet of public entrance to the each use. The conceptual site plan provides no bicycle parking facilities; this is considered a potentially significant impact. Bicycle parking consultant recommendations are presented in the parking section below.

6.2.5 Pedestrian On-Site Circulation

Paved pedestrian paths are provided throughout the project site and provide access between each of the surface parking lots and the adjacent sport facilities. No sidewalks are provided along the major east-west internal roadway. The major east-west roadway provides access to the external roadway network via a project driveway at Tracy Boulevard and Corral Hollow Road. Sidewalks along this roadway would also provide a more direct east-west route for pedestrians.

Consultant Recommendation 6-6:

> The project applicant should consider providing sidewalks along both sides of the major east-west internal roadway to provide direct and efficient pedestrian access across the project site. Sidewalk width is recommended to be at least 5-feet. American with Disabilities Act (ADA) compliant curb ramps must also be provided along the sidewalk curbs.

Parking stalls throughout the project site have generally been designed to be parallel to the uses they are serving, such that pedestrians walk across parking aisles, as opposed to walking along parked vehicles. This configuration could create more vehicle/pedestrian conflicts because pedestrians would have to walk across parking aisles, conflicting with circulating vehicles. The conceptual site plan provides no pedestrian crossing treatments (i.e. cross-walks).

Consultant Recommendation 6-7:

> The project applicant should consider providing pedestrian crossing treatments across the drive aisles, as shown on Figure 6-1.

A Class I pedestrian/bike path is planned to be provided on the passive-recreation area, as well as the future expansion area. However, the conceptual site plan provides no details for the two areas adjacent to the active sports park. The conceptual site plan should be reviewed again for on-site pedestrian circulation when the conceptual design for the passive-recreation and future expansion areas becomes available.

Consultant Recommendation 6-8:

> The project applicant shall provide pedestrian access between the active sports park and the passive-recreation and future expansion areas via paved pedestrian/bicycle paths.

6.2.6 Bicycle On-Site Circulation

The conceptual project site-plan provides no bicycle facilities on the active sports park. The lack of bicycle facilities results in un-favorable conditions for bicyclists to navigate through the active sports park area. If no bicycle facilities are provided on site, it is considered a potentially significant impact.

Consultant Recommendation 6-9:

> The project applicant shall provide Class II bicycle lanes on both sides of the major east-west internal roadway. The Class II lane should be a maximum width of 5-feet with a maximum gutter span of 2-feet. The roadway is recommended to be designed with a maximum grade of 5% to allow for a pleasant user experience. Or
>
> The project applicant shall provide a Class I pedestrian/bike path through the active sports park area with connections to potential Class I paths on the passive-recreation or future-expansion areas.

A Class I pedestrian/bike path is planned to be provided on the passive-recreation area, as well as the future expansion area. However, the conceptual site plan provides no details for the two areas adjacent to the active sports park. The conceptual site plan should be reviewed again for on-site bicycle circulation when the conceptual design for the passive-recreation and future expansion areas becomes available.

Consultant Recommendation 6-10:

> The project applicant shall provide bicycle access between the active sports park and the passive-recreation and future expansion areas via paved pedestrian/bicycle paths.

6.3 PARKING

A total of 2,931 on-site parking spaces are shown on the conceptual site plan for the project. The proposed on-site parking supply was compared to both City of Tracy Municipal Code parking requirements and ITE parking demand rates.

6.3.1 City Code

Vehicles

Parking requirements were reviewed to ensure the proposed project would provide sufficient parking based on City Code requirements. The City of Tracy requires on parking stall per five fixed seats of a stadium, but does not have any specific requirements for a sports complex aside from a stadium. According to code 10.08.3490, parking requirements for a use that is not stated in the City Code shall be determined by the City's Planning Commission. Based on City parking requirements, the project would have to provide a total of 700 parking stalls for the 3,500-seat capacity stadium, and the parking requirements for the remaining uses would have to be determined by the City's Planning Commission.

Bicycles

City of Tracy requires that a development provide bicycle parking spaces on parking lots. According to code 10.08.3510, the project should provide bicycle parking stalls that total five percent of the number of provided auto spaces. A total of 2,931 on-site parking spaces are shown, therefore the project should provide at least 147 bicycle spaces throughout the site. No bicycle parking spaces are shown on the conceptual site plan. This is considered a potentially significant impact.

Consultant Recommendation 6-11:

> The project applicant shall provide bicycle parking spaces at each of the surface parking lots that equate to five percent of the number of provided vehicle parking spaces. Overall, the site should provide a total of at least 147 parking spaces. Bicycle parking stalls should conform to City Code design standards and should be located near the sport field facilities.

6.3.2 Parking Demand

Parking demand estimates are typically developed using parking demand rates contained in the ITE *Parking Generation*, (3rd Edition). As was the case for the trip generation estimates, ITE parking demand rates are not available for many of the uses and facilities that are planned on the project site; therefore, engineering judgment was used to develop parking demand estimates.

The parking demand was analyzed during the Saturday peak hour for the soccer season, which is the season expected to generate the largest number of trips. According to City Code parking requirements, the project would have to provide a total of 700 parking stalls for the 3,500-seat capacity stadium. The estimated trip generation rate per soccer field was 64 trips (32 incoming, 32 outgoing) during the Saturday peak hour. Based on the trip generation estimates, it is expected that the peak hour parking demand per soccer field would be 32 parking spaces. Hence, the 14 soccer fields proposed on the site would generate a Saturday peak hour parking demand of 448 parking spaces. The total peak hour parking demand for the active sports area would be 1,148 parking stalls, which includes the demand for the football/soccer stadium and the 14 soccer fields. The project provides 2,931 parking stalls, which is more then enough to accommodate the estimated Saturday peak hour parking demand.

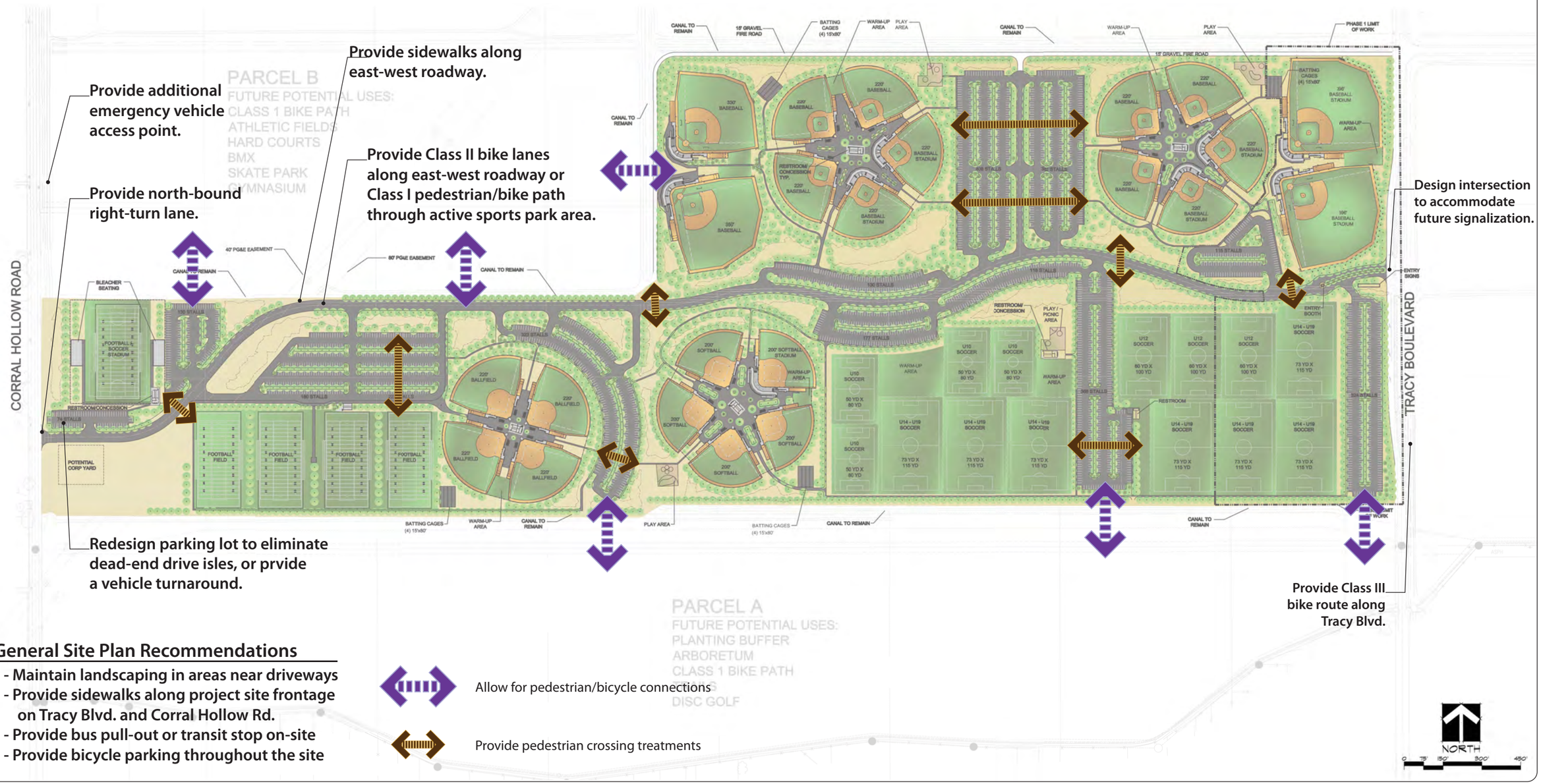

General Site Plan Recommendations

- Maintain landscaping in areas near driveways
- Provide sidewalks along project site frontage on Tracy Blvd. and Corral Hollow Rd.
- Provide bus pull-out or transit stop on-site
- Provide bicycle parking throughout the site

Allow for pedestrian/bicycle connections

Provide pedestrian crossing treatments

Holly Sugar Sports Park EIR

FEHR & PEERS
TRANSPORTATION CONSULTANTS

May 2009
WC08-2605_Recommendations

CONSULTANT SITE PLAN RECOMMENDATIONS

FIGURE 6-1

CHAPTER 7. CONSTRUCTION TRAFFIC IMPACTS

This chapter assesses construction-related traffic impacts for the project site. The purpose of this analysis is to determine if construction-related traffic would cause additional significant impacts beyond those previously identified.

7.1 PROJECT CONSTRUCTION ACTIVITIES

Construction work will include two types of activities – site preparation and construction. Building construction can only take place after site preparation.

Site preparation includes all of the activities required to allow construction on the individual parcels of the future developments. Major components of site preparation can include removal of contaminated soil material, deposition of fill, grading of the site, and construction of necessary infrastructure. The final phase of site preparation is the installation of infrastructure which will include water lines and other utilities. A variety of construction equipment will be required for the site preparation phase, including bull-dozers, grading machines, and dump trucks.

Construction involves the assembly of the actual buildings and structures. Major elements of construction can include driving piles to support the building foundation, constructing the building frame, pouring concrete, completing the interior of each building on the project site.

7.2 PROJECT CONSTRUCTION TRAFFIC

Due to the size and amount of work that will be required to construct this development, it is expected that construction related traffic could negatively impact vehicular flow along Tracy Boulevard and Corral Hollow Road. Creating adequate storage and staging areas for equipment, materials, and vehicles will potentially cause additional construction impacts. Given the level of anticipated construction activity, it is recommended that a construction traffic management plan be developed for the site.

7.3 MITIGATION

To mitigate any construction related impacts, Fehr & Peers recommends preparing and implementing construction traffic management plans for the proposed project. The construction traffic management plans should include the following items:

- A map documenting material and equipment staging and storage locations for all phases of construction
- A map documenting worker parking locations for all phases of construction
- A construction schedule that outlines days and hours of construction to limit noise impacts
- Signage plans relating to any temporary lane closures on public streets
- Notification procedures for adjacent businesses, residents, and public safety personnel for all major deliveries, detours, and street closures that will affect traffic in the vicinity of the development
- Provisions for monitoring surface streets designated as truck routes so that any damage and debris attributed to the trucks can be identified and corrected

- Signage plans documenting any detours for bicycle and pedestrian traffic

Fehr & Peers recommends that regional access to the project site for all construction traffic will be via I-205 and use the Tracy Boulevard interchange.

Additionally, all staging and parking related to construction shall take place on-site. The project applicant should also water down the site to reduce dust due to construction vehicles. The project applicant will develop a construction management plan prior to any construction activities on-site. The plans will be subject to review and approval by the City of Tracy. If these construction management plans are created and implemented the construction impact will be less than significant.

APPENDIX A:
TRAFFIC DATA

All Traffic Data

(916) 771-8700
Fax 771-8700

TRACY

File Name : CORRAL HOLLOW-LARCH-F
Site Code : 00000000
Start Date : 12/4/2008
Page No : 1

Groups Printed- Unshifted

	CORRAL HOLLOW RD. Southbound				LARCH RD. Westbound				CORRAL HOLLOW RD. Northbound				LARCH RD. Eastbound				
Start Time	Left	Thru	Right	App. Total	Left	Thru	Right	App. Total	Left	Thru	Right	App. Total	Left	Thru	Right	App. Total	Int. Total
16:00	5	16	1	22	20	4	9	33	0	23	16	39	5	2	14	21	115
16:15	0	9	2	11	19	3	5	27	4	29	32	65	5	18	25	48	151
16:30	2	18	2	22	14	9	12	35	6	24	34	64	6	17	23	46	167
16:45	0	10	2	12	21	6	9	36	6	23	22	51	6	24	21	51	150
Total	7	53	7	67	74	22	35	131	16	99	104	219	22	61	83	166	583
17:00	3	13	1	17	22	6	8	36	3	21	25	49	1	21	20	42	144
17:15	3	6	0	9	17	1	5	23	10	20	21	51	3	12	13	28	111
17:30	2	3	4	9	12	7	8	27	5	18	17	40	4	9	14	27	103
17:45	0	9	1	10	9	15	18	42	16	16	21	53	5	17	30	52	157
Total	8	31	6	45	60	29	39	128	34	75	84	193	13	59	77	149	515
Grand Total	15	84	13	112	134	51	74	259	50	174	188	412	35	120	160	315	1098
Apprch %	13.4	75	11.6		51.7	19.7	28.6		12.1	42.2	45.6		11.1	38.1	50.8		
Total %	1.4	7.7	1.2	10.2	12.2	4.6	6.7	23.6	4.6	15.8	17.1	37.5	3.2	10.9	14.6	28.7	

	CORRAL HOLLOW RD. Southbound				LARCH RD. Westbound				CORRAL HOLLOW RD. Northbound				LARCH RD. Eastbound				
Start Time	Left	Thru	Right	App. Total	Left	Thru	Right	App. Total	Left	Thru	Right	App. Total	Left	Thru	Right	App. Total	Int. Total
Peak Hour Analysis From 16:00 to 17:45 - Peak 1 of 1																	
Peak Hour for Entire Intersection Begins at 16:15																	
16:15	0	9	**2**	11	19	3	5	27	4	**29**	32	**65**	5	18	**25**	48	151
16:30	2	**18**	2	**22**	14	**9**	**12**	35	**6**	24	**34**	64	**6**	17	23	46	**167**
16:45	0	10	2	12	21	6	9	**36**	6	23	22	51	6	**24**	21	**51**	150
17:00	**3**	13	1	17	**22**	6	8	36	3	21	25	49	1	21	20	42	144
Total Volume	5	50	7	62	76	24	34	134	19	97	113	229	18	80	89	187	612
% App. Total	8.1	80.6	11.3		56.7	17.9	25.4		8.3	42.4	49.3		9.6	42.8	47.6		
PHF	.417	.694	.875	.705	.864	.667	.708	.931	.792	.836	.831	.881	.750	.833	.890	.917	.916

All Traffic Data

(916) 771-8700
Fax 771-8700

TRACY

File Name : CORRAL HOLLOW-LARCH-F
Site Code : 00000000
Start Date : 12/4/2008
Page No : 2

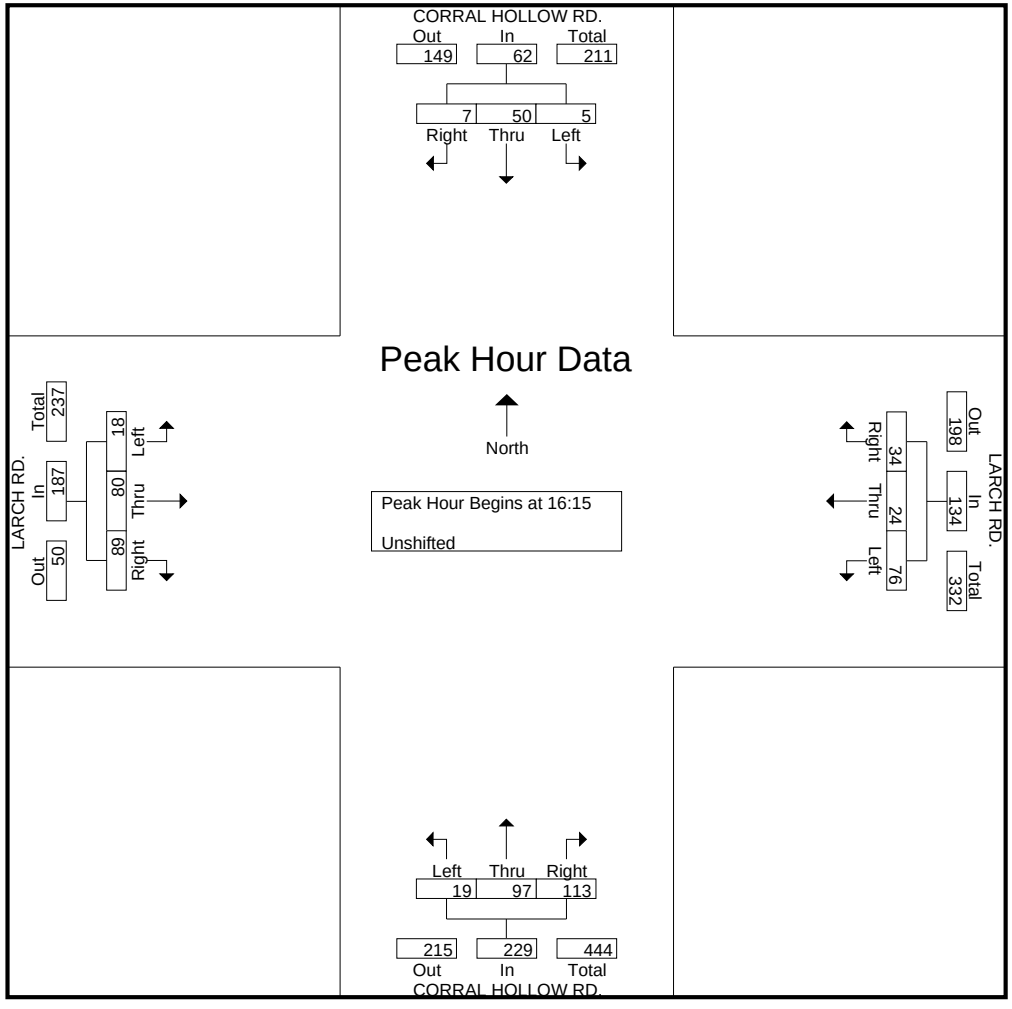

All Traffic Data

(916) 771-8700
Fax 771-8700

TRACY

File Name : CORRAL HOLLOW-VALLEY MALL-F
Site Code : 00000000
Start Date : 12/4/2008
Page No : 1

Groups Printed- Unshifted

	CORRAL HOLLOW RD. Southbound				Westbound				CORRAL HOLLOW RD. Northbound				WEST VALLEY MALL Eastbound				
Start Time	Left	Thru	Right	App. Total	Left	Thru	Right	App. Total	Left	Thru	Right	App. Total	Left	Thru	Right	App. Total	Int. Total
16:00	0	29	14	43	0	0	0	0	67	38	0	105	10	0	96	106	254
16:15	0	27	17	44	0	0	0	0	75	41	0	116	13	0	99	112	272
16:30	0	34	17	51	0	0	0	0	83	47	0	130	22	0	101	123	304
16:45	0	29	18	47	0	0	0	0	98	43	0	141	18	0	95	113	301
Total	0	119	66	185	0	0	0	0	323	169	0	492	63	0	391	454	1131
17:00	0	43	13	56	0	0	0	0	92	42	0	134	13	0	101	114	304
17:15	0	20	12	32	0	0	0	0	94	39	0	133	15	0	110	125	290
17:30	0	18	11	29	0	0	0	0	92	32	0	124	10	0	117	127	280
17:45	0	33	10	43	0	0	0	0	97	46	0	143	10	0	102	112	298
Total	0	114	46	160	0	0	0	0	375	159	0	534	48	0	430	478	1172
Grand Total	0	233	112	345	0	0	0	0	698	328	0	1026	111	0	821	932	2303
Apprch %	0	67.5	32.5		0	0	0		68	32	0		11.9	0	88.1		
Total %	0	10.1	4.9	15	0	0	0	0	30.3	14.2	0	44.6	4.8	0	35.6	40.5	

	CORRAL HOLLOW RD. Southbound				Westbound				CORRAL HOLLOW RD. Northbound				WEST VALLEY MALL Eastbound				
Start Time	Left	Thru	Right	App. Total	Left	Thru	Right	App. Total	Left	Thru	Right	App. Total	Left	Thru	Right	App. Total	Int. Total
Peak Hour Analysis From 16:00 to 17:45 - Peak 1 of 1																	
Peak Hour for Entire Intersection Begins at 16:30																	
16:30	0	34	17	51	0	0	0	0	83	**47**	0	130	**22**	0	101	123	**304**
16:45	0	29	**18**	47	0	0	0	0	**98**	43	0	**141**	18	0	95	113	301
17:00	0	**43**	13	**56**	0	0	0	0	92	42	0	134	13	0	101	114	304
17:15	0	20	12	32	0	0	0	0	94	39	0	133	15	0	**110**	**125**	290
Total Volume	0	126	60	186	0	0	0	0	367	171	0	538	68	0	407	475	1199
% App. Total	0	67.7	32.3		0	0	0		68.2	31.8	0		14.3	0	85.7		
PHF	.000	.733	.833	.830	.000	.000	.000	.000	.936	.910	.000	.954	.773	.000	.925	.950	.986

All Traffic Data

(916) 771-8700
Fax 771-8700

TRACY

File Name : CORRAL HOLLOW-VALLEY MALL-F
Site Code : 00000000
Start Date : 12/4/2008
Page No : 2

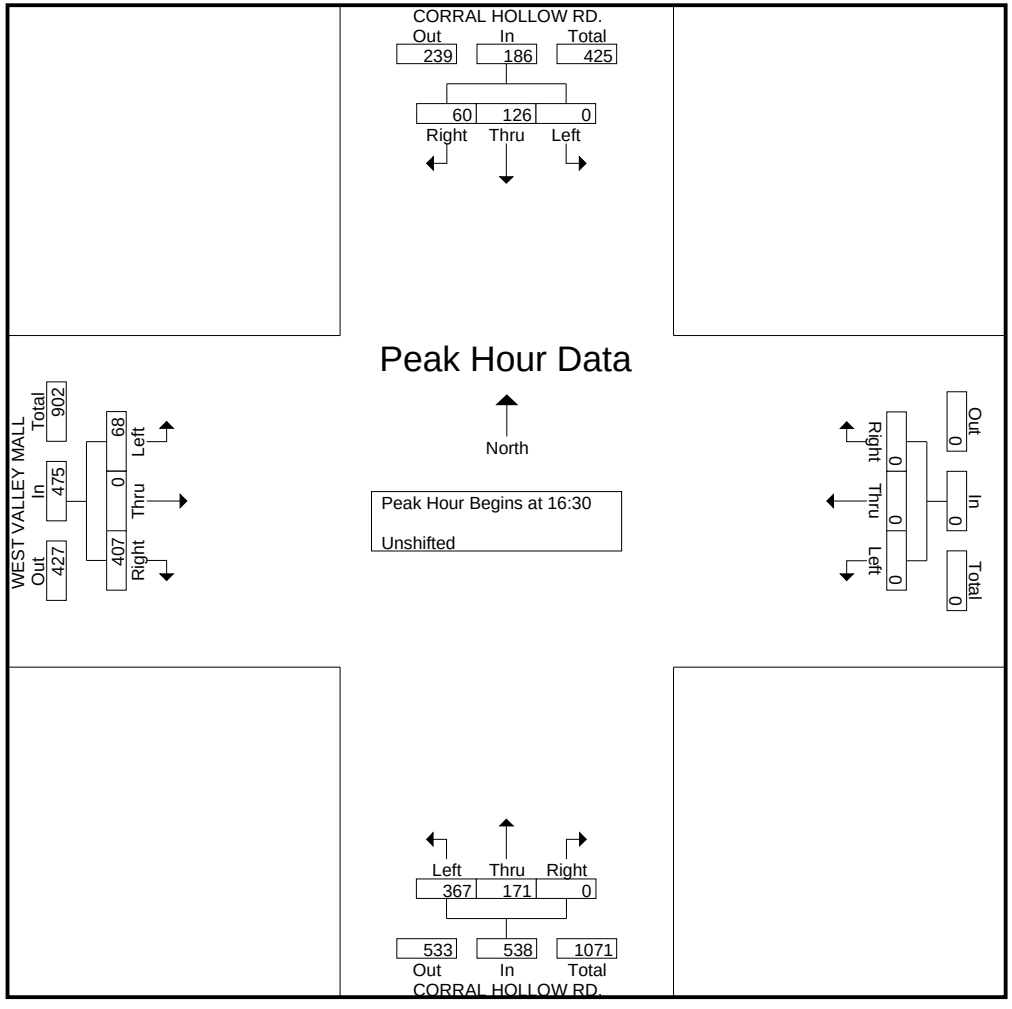

All Traffic Data

(916) 771-8700
Fax 771-8700

TRACY

File Name : CORRAL HOLLOW-GRANT LINE-F
Site Code : 00000000
Start Date : 12/4/2008
Page No : 1

Groups Printed- Unshifted

	CORRAL HOLLOW RD. Southbound				GRANT LINE RD. Westbound				CORRAL HOLLOW RD. Northbound				GRANT LINE RD. Eastbound				
Start Time	Left	Thru	Right	App. Total	Left	Thru	Right	App. Total	Left	Thru	Right	App. Total	Left	Thru	Right	App. Total	Int. Total
16:00	35	61	21	117	40	124	19	183	131	70	59	260	24	171	153	348	908
16:15	32	83	19	134	40	122	25	187	130	80	62	272	28	174	125	327	920
16:30	35	74	23	132	46	127	25	198	130	86	52	268	28	148	140	316	914
16:45	33	73	17	123	24	103	26	153	119	86	71	276	30	172	151	353	905
Total	135	291	80	506	150	476	95	721	510	322	244	1076	110	665	569	1344	3647
17:00	27	96	20	143	52	94	26	172	113	89	75	277	25	182	168	375	967
17:15	28	90	14	132	47	108	26	181	108	88	58	254	28	183	139	350	917
17:30	32	82	16	130	69	129	31	229	130	84	65	279	25	186	162	373	1011
17:45	33	82	15	130	67	101	25	193	131	91	49	271	34	189	187	410	1004
Total	120	350	65	535	235	432	108	775	482	352	247	1081	112	740	656	1508	3899
Grand Total	255	641	145	1041	385	908	203	1496	992	674	491	2157	222	1405	1225	2852	7546
Apprch %	24.5	61.6	13.9		25.7	60.7	13.6		46	31.2	22.8		7.8	49.3	43		
Total %	3.4	8.5	1.9	13.8	5.1	12	2.7	19.8	13.1	8.9	6.5	28.6	2.9	18.6	16.2	37.8	

	CORRAL HOLLOW RD. Southbound				GRANT LINE RD. Westbound				CORRAL HOLLOW RD. Northbound				GRANT LINE RD. Eastbound				
Start Time	Left	Thru	Right	App. Total	Left	Thru	Right	App. Total	Left	Thru	Right	App. Total	Left	Thru	Right	App. Total	Int. Total
Peak Hour Analysis From 16:00 to 17:45 - Peak 1 of 1																	
Peak Hour for Entire Intersection Begins at 17:00																	
17:00	27	**96**	**20**	**143**	52	94	26	172	113	89	**75**	277	25	182	168	375	967
17:15	28	90	14	132	47	108	26	181	108	88	58	254	28	183	139	350	917
17:30	32	82	16	130	**69**	**129**	**31**	**229**	130	84	65	**279**	25	186	162	373	**1011**
17:45	**33**	82	15	130	67	101	25	193	**131**	**91**	49	271	**34**	**189**	**187**	**410**	1004
Total Volume	120	350	65	535	235	432	108	775	482	352	247	1081	112	740	656	1508	3899
% App. Total	22.4	65.4	12.1		30.3	55.7	13.9		44.6	32.6	22.8		7.4	49.1	43.5		
PHF	.909	.911	.813	.935	.851	.837	.871	.846	.920	.967	.823	.969	.824	.979	.877	.920	.964

All Traffic Data

(916) 771-8700
Fax 771-8700

TRACY

File Name : CORRAL HOLLOW-GRANT LINE-F
Site Code : 00000000
Start Date : 12/4/2008
Page No : 2

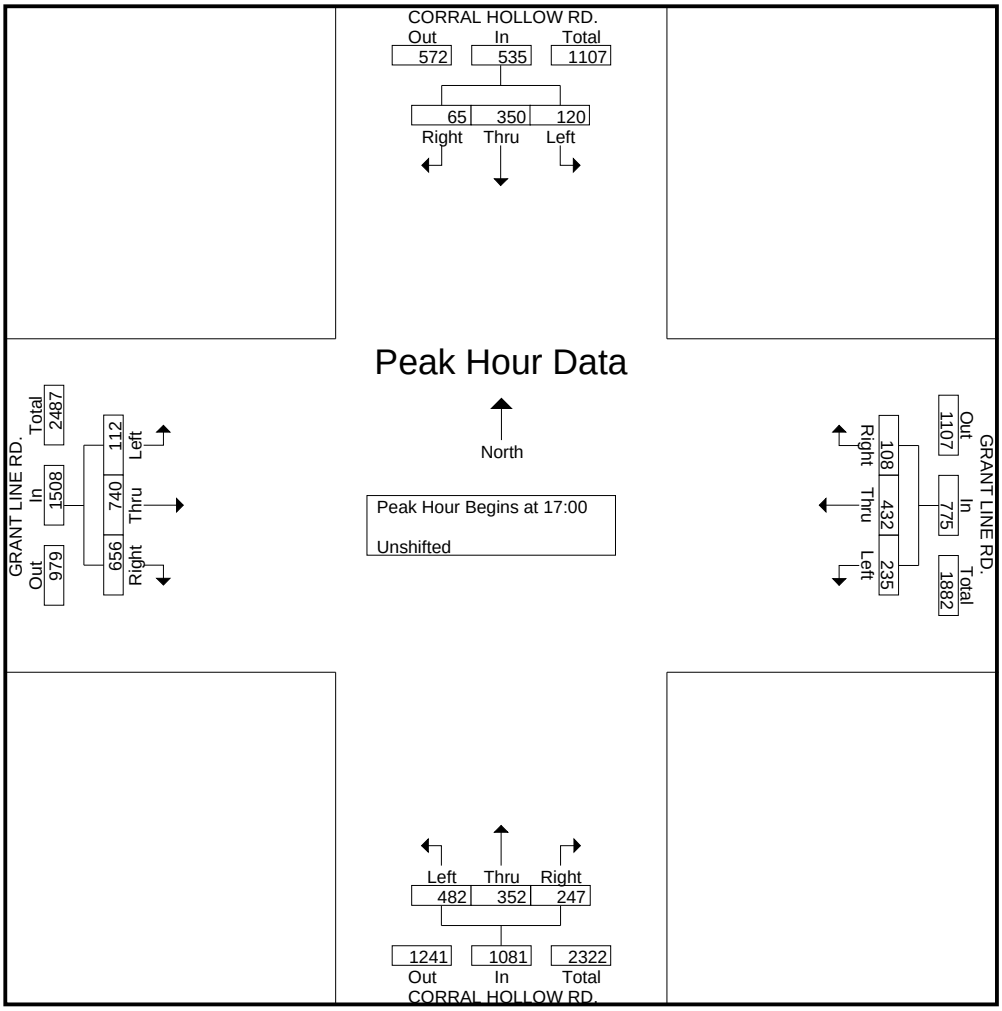

All Traffic Data

(916) 771-8700
Fax 771-8700

TRACY

File Name : TRACY-LARCH-F
Site Code : 00000000
Start Date : 12/4/2008
Page No : 1

Groups Printed- Unshifted

	TRACY BLVD. Southbound				LARCH RD. Westbound				TRACY BLVD. Northbound				LARCH RD. Eastbound				
Start Time	Left	Thru	Right	App. Total	Left	Thru	Right	App. Total	Left	Thru	Right	App. Total	Left	Thru	Right	App. Total	Int. Total
16:00	4	24	0	28	39	16	5	60	23	37	38	98	1	21	25	47	233
16:15	2	29	1	32	31	17	2	50	15	34	19	68	1	17	24	42	192
16:30	1	23	0	24	33	15	3	51	14	33	25	72	1	27	24	52	199
16:45	4	18	0	22	29	24	1	54	21	35	25	81	2	27	33	62	219
Total	11	94	1	106	132	72	11	215	73	139	107	319	5	92	106	203	843
17:00	0	17	1	18	53	27	6	86	11	40	28	79	1	29	24	54	237
17:15	1	20	0	21	30	11	4	45	16	35	24	75	1	19	15	35	176
17:30	1	29	1	31	28	12	3	43	21	36	31	88	3	20	14	37	199
17:45	0	23	4	27	40	15	2	57	17	37	32	86	2	9	16	27	197
Total	2	89	6	97	151	65	15	231	65	148	115	328	7	77	69	153	809
Grand Total	13	183	7	203	283	137	26	446	138	287	222	647	12	169	175	356	1652
Apprch %	6.4	90.1	3.4		63.5	30.7	5.8		21.3	44.4	34.3		3.4	47.5	49.2		
Total %	0.8	11.1	0.4	12.3	17.1	8.3	1.6	27	8.4	17.4	13.4	39.2	0.7	10.2	10.6	21.5	

	TRACY BLVD. Southbound				LARCH RD. Westbound				TRACY BLVD. Northbound				LARCH RD. Eastbound				
Start Time	Left	Thru	Right	App. Total	Left	Thru	Right	App. Total	Left	Thru	Right	App. Total	Left	Thru	Right	App. Total	Int. Total
Peak Hour Analysis From 16:00 to 17:45 - Peak 1 of 1																	
Peak Hour for Entire Intersection Begins at 16:15																	
16:15	2	**29**	**1**	**32**	31	17	2	50	15	34	19	68	1	17	24	42	192
16:30	1	23	0	24	33	15	3	51	14	33	25	72	1	27	24	52	199
16:45	**4**	18	0	22	29	24	1	54	**21**	35	25	**81**	**2**	27	**33**	**62**	219
17:00	0	17	1	18	**53**	**27**	**6**	**86**	11	**40**	**28**	79	1	**29**	24	54	**237**
Total Volume	7	87	2	96	146	83	12	241	61	142	97	300	5	100	105	210	847
% App. Total	7.3	90.6	2.1		60.6	34.4	5		20.3	47.3	32.3		2.4	47.6	50		
PHF	.438	.750	.500	.750	.689	.769	.500	.701	.726	.888	.866	.926	.625	.862	.795	.847	.893

All Traffic Data

(916) 771-8700
Fax 771-8700

TRACY

File Name : TRACY-LARCH-F
Site Code : 00000000
Start Date : 12/4/2008
Page No : 2

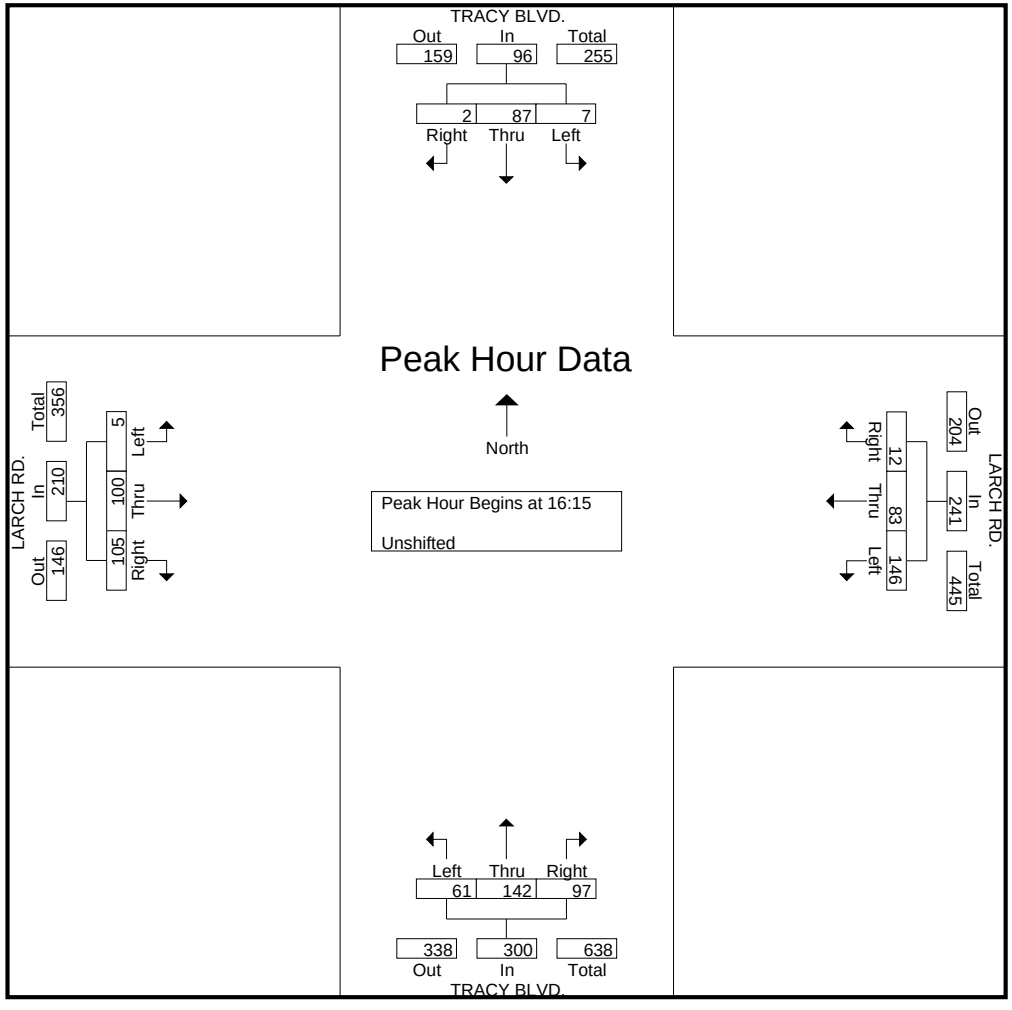

Peak Hour Data

North

Peak Hour Begins at 16:15

Unshifted

All Traffic Data

(916) 771-8700
Fax 771-8700

TRACY

File Name : TRACY-WB 205 RAMPS-F
Site Code : 00000000
Start Date : 12/4/2008
Page No : 1

Groups Printed- Unshifted

	TRACY BLVD. Southbound				WB 205 OFF RAMP Westbound				TRACY BLVD. Northbound				WB 205 ON RAMP Eastbound				
Start Time	Left	Thru	Right	App. Total	Left	Thru	Right	App. Total	Left	Thru	Right	App. Total	Left	Thru	Right	App. Total	Int. Total
16:00	0	81	20	101	67	1	24	92	24	84	0	108	0	0	0	0	301
16:15	0	85	23	108	76	3	20	99	26	67	0	93	0	0	0	0	300
16:30	0	80	18	98	65	3	27	95	35	65	0	100	0	0	0	0	293
16:45	0	73	19	92	76	0	27	103	36	77	0	113	0	0	0	0	308
Total	0	319	80	399	284	7	98	389	121	293	0	414	0	0	0	0	1202
17:00	0	89	27	116	79	1	27	107	35	71	0	106	0	0	0	0	329
17:15	0	66	25	91	89	0	30	119	34	75	0	109	0	0	0	0	319
17:30	0	72	21	93	104	1	32	137	28	81	0	109	0	0	0	0	339
17:45	0	82	28	110	108	2	24	134	30	82	0	112	0	0	0	0	356
Total	0	309	101	410	380	4	113	497	127	309	0	436	0	0	0	0	1343
Grand Total	0	628	181	809	664	11	211	886	248	602	0	850	0	0	0	0	2545
Apprch %	0	77.6	22.4		74.9	1.2	23.8		29.2	70.8	0		0	0	0		
Total %	0	24.7	7.1	31.8	26.1	0.4	8.3	34.8	9.7	23.7	0	33.4	0	0	0	0	

	TRACY BLVD. Southbound				WB 205 OFF RAMP Westbound				TRACY BLVD. Northbound				WB 205 ON RAMP Eastbound				
Start Time	Left	Thru	Right	App. Total	Left	Thru	Right	App. Total	Left	Thru	Right	App. Total	Left	Thru	Right	App. Total	Int. Total
Peak Hour Analysis From 16:00 to 17:45 - Peak 1 of 1																	
Peak Hour for Entire Intersection Begins at 17:00																	
17:00	0	**89**	27	**116**	79	1	27	107	**35**	71	0	106	0	0	0	0	329
17:15	0	66	25	91	89	0	30	119	34	75	0	109	0	0	0	0	319
17:30	0	72	21	93	104	1	**32**	**137**	28	81	0	109	0	0	0	0	339
17:45	0	82	**28**	110	**108**	**2**	24	134	30	**82**	0	**112**	0	0	0	0	**356**
Total Volume	0	309	101	410	380	4	113	497	127	309	0	436	0	0	0	0	1343
% App. Total	0	75.4	24.6		76.5	0.8	22.7		29.1	70.9	0		0	0	0		
PHF	.000	.868	.902	.884	.880	.500	.883	.907	.907	.942	.000	.973	.000	.000	.000	.000	.943

All Traffic Data

(916) 771-8700
Fax 771-8700

TRACY

File Name : TRACY-WB 205 RAMPS-F
Site Code : 00000000
Start Date : 12/4/2008
Page No : 2

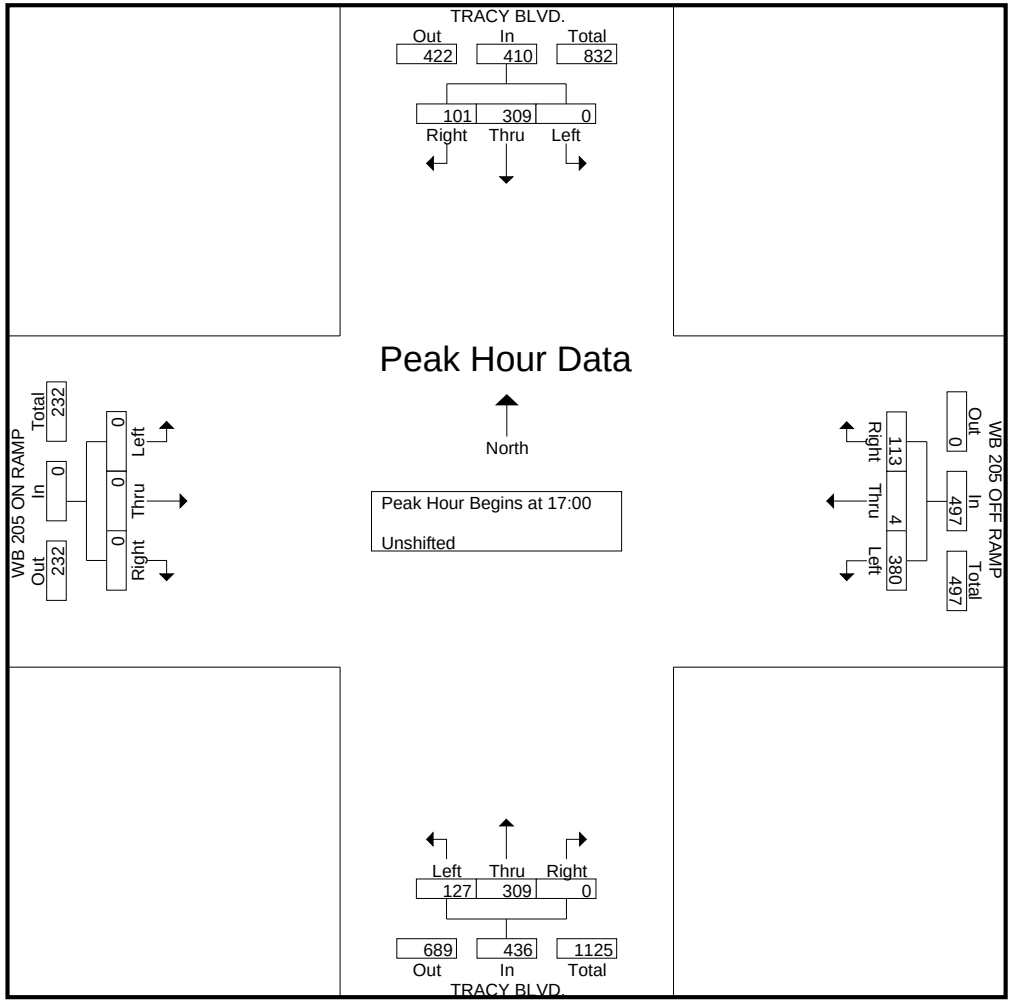

All Traffic Data

(916) 771-8700
Fax 771-8700

TRACY

File Name : TRACY-EB 205 RAMPS-F
Site Code : 00000000
Start Date : 12/4/2008
Page No : 1

Groups Printed- Unshifted

	TRACY BLVD. Southbound				EB 205 ON RAMP Westbound				TRACY BLVD. Northbound				EB 205 OFF RAMP Eastbound				
Start Time	Left	Thru	Right	App. Total	Left	Thru	Right	App. Total	Left	Thru	Right	App. Total	Left	Thru	Right	App. Total	Int. Total
16:00	34	128	0	162	0	0	0	0	0	87	74	161	27	1	24	52	375
16:15	32	135	0	167	0	0	0	0	0	68	78	146	19	2	23	44	357
16:30	33	117	0	150	0	0	0	0	0	87	63	150	11	2	21	34	334
16:45	31	127	0	158	0	0	0	0	0	84	65	149	18	6	21	45	352
Total	130	507	0	637	0	0	0	0	0	326	280	606	75	11	89	175	1418
17:00	33	130	0	163	0	0	0	0	0	85	76	161	21	2	34	57	381
17:15	33	130	0	163	0	0	0	0	0	97	65	162	16	2	37	55	380
17:30	23	162	0	185	0	0	0	0	0	92	62	154	15	3	39	57	396
17:45	28	158	0	186	0	0	0	0	0	95	60	155	18	3	49	70	411
Total	117	580	0	697	0	0	0	0	0	369	263	632	70	10	159	239	1568
Grand Total	247	1087	0	1334	0	0	0	0	0	695	543	1238	145	21	248	414	2986
Apprch %	18.5	81.5	0		0	0	0		0	56.1	43.9		35	5.1	59.9		
Total %	8.3	36.4	0	44.7	0	0	0	0	0	23.3	18.2	41.5	4.9	0.7	8.3	13.9	

	TRACY BLVD. Southbound				EB 205 ON RAMP Westbound				TRACY BLVD. Northbound				EB 205 OFF RAMP Eastbound				
Start Time	Left	Thru	Right	App. Total	Left	Thru	Right	App. Total	Left	Thru	Right	App. Total	Left	Thru	Right	App. Total	Int. Total
Peak Hour Analysis From 16:00 to 17:45 - Peak 1 of 1																	
Peak Hour for Entire Intersection Begins at 17:00																	
17:00	**33**	130	0	163	0	0	0	0	0	85	**76**	161	**21**	2	34	57	381
17:15	33	130	0	163	0	0	0	0	0	**97**	65	**162**	16	2	37	55	380
17:30	23	**162**	0	185	0	0	0	0	0	92	62	154	15	**3**	39	57	396
17:45	28	158	0	**186**	0	0	0	0	0	95	60	155	18	3	**49**	**70**	**411**
Total Volume	117	580	0	697	0	0	0	0	0	369	263	632	70	10	159	239	1568
% App. Total	16.8	83.2	0		0	0	0		0	58.4	41.6		29.3	4.2	66.5		
PHF	.886	.895	.000	.937	.000	.000	.000	.000	.000	.951	.865	.975	.833	.833	.811	.854	.954

All Traffic Data

(916) 771-8700
Fax 771-8700

TRACY

File Name : TRACY-EB 205 RAMPS-F
Site Code : 00000000
Start Date : 12/4/2008
Page No : 2

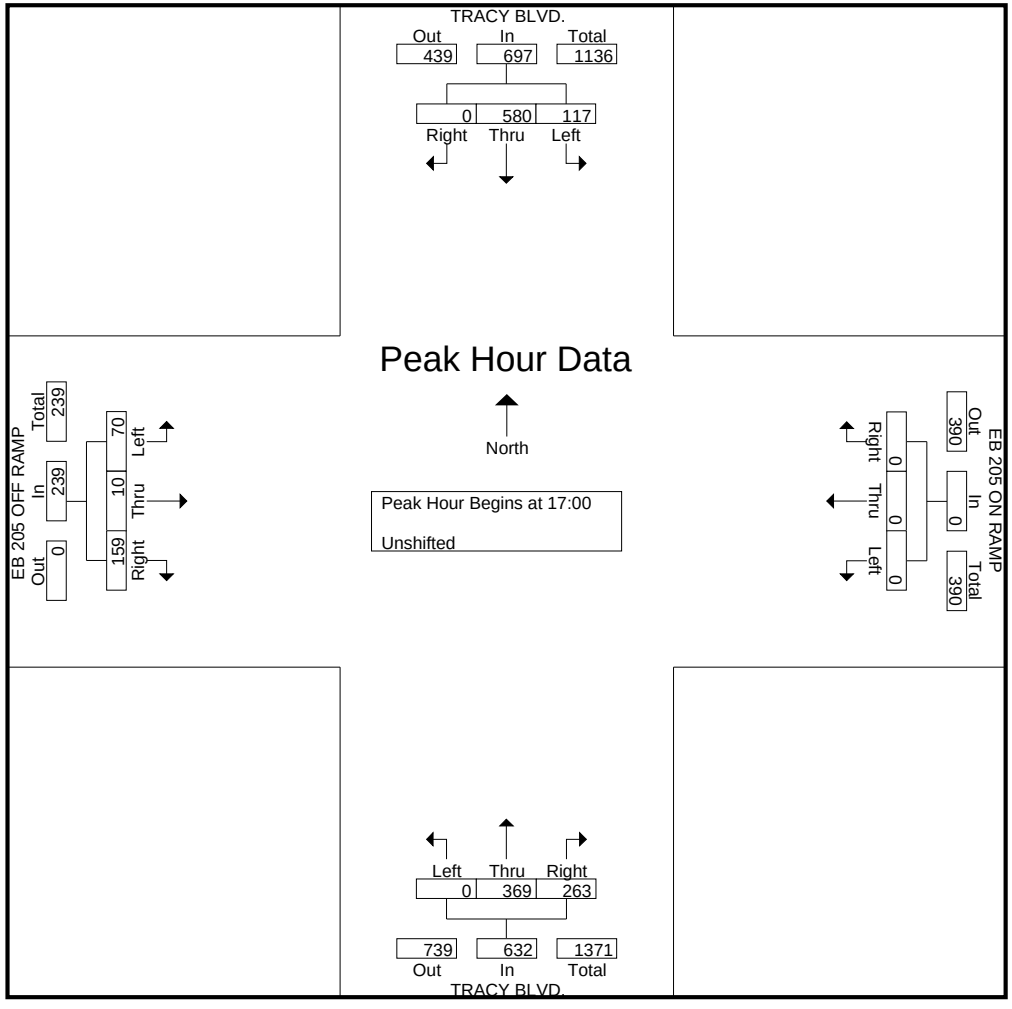

All Traffic Data

(916) 771-8700
Fax 771-8700

TRACY

File Name : TRACY-GRANT LINE-F
Site Code : 00000000
Start Date : 12/4/2008
Page No : 1

Groups Printed- Unshifted

	TRACY BLVD. Southbound				GRANT LINE RD. Westbound				TRACY BLVD. Northbound				GRANT LINE RD. Eastbound				
Start Time	Left	Thru	Right	App. Total	Left	Thru	Right	App. Total	Left	Thru	Right	App. Total	Left	Thru	Right	App. Total	Int. Total
16:00	23	129	37	189	30	95	29	154	54	115	44	213	59	170	26	255	811
16:15	27	109	29	165	31	101	36	168	45	118	41	204	54	166	39	259	796
16:30	34	101	37	172	27	85	39	151	56	115	41	212	45	133	38	216	751
16:45	36	112	24	172	34	75	33	142	55	126	50	231	51	170	38	259	804
Total	120	451	127	698	122	356	137	615	210	474	176	860	209	639	141	989	3162
17:00	38	151	34	223	41	94	39	174	56	133	48	237	56	144	36	236	870
17:15	35	128	31	194	33	102	36	171	55	111	47	213	60	167	35	262	840
17:30	45	132	51	228	31	118	31	180	47	110	39	196	48	140	41	229	833
17:45	39	121	45	205	29	94	32	155	49	114	37	200	48	122	44	214	774
Total	157	532	161	850	134	408	138	680	207	468	171	846	212	573	156	941	3317
Grand Total	277	983	288	1548	256	764	275	1295	417	942	347	1706	421	1212	297	1930	6479
Apprch %	17.9	63.5	18.6		19.8	59	21.2		24.4	55.2	20.3		21.8	62.8	15.4		
Total %	4.3	15.2	4.4	23.9	4	11.8	4.2	20	6.4	14.5	5.4	26.3	6.5	18.7	4.6	29.8	

	TRACY BLVD. Southbound				GRANT LINE RD. Westbound				TRACY BLVD. Northbound				GRANT LINE RD. Eastbound				
Start Time	Left	Thru	Right	App. Total	Left	Thru	Right	App. Total	Left	Thru	Right	App. Total	Left	Thru	Right	App. Total	Int. Total
Peak Hour Analysis From 16:00 to 17:45 - Peak 1 of 1																	
Peak Hour for Entire Intersection Begins at 16:45																	
16:45	36	112	24	172	34	75	33	142	55	126	**50**	231	51	**170**	38	259	804
17:00	38	**151**	34	223	**41**	94	**39**	174	**56**	**133**	48	**237**	56	144	36	236	**870**
17:15	35	128	31	194	33	102	36	171	55	111	47	213	**60**	167	35	**262**	840
17:30	**45**	132	**51**	**228**	31	**118**	31	**180**	47	110	39	196	48	140	**41**	229	833
Total Volume	154	523	140	817	139	389	139	667	213	480	184	877	215	621	150	986	3347
% App. Total	18.8	64	17.1		20.8	58.3	20.8		24.3	54.7	21		21.8	63	15.2		
PHF	.856	.866	.686	.896	.848	.824	.891	.926	.951	.902	.920	.925	.896	.913	.915	.941	.962

All Traffic Data

(916) 771-8700
Fax 771-8700

TRACY

File Name : TRACY-GRANT LINE-F
Site Code : 00000000
Start Date : 12/4/2008
Page No : 2

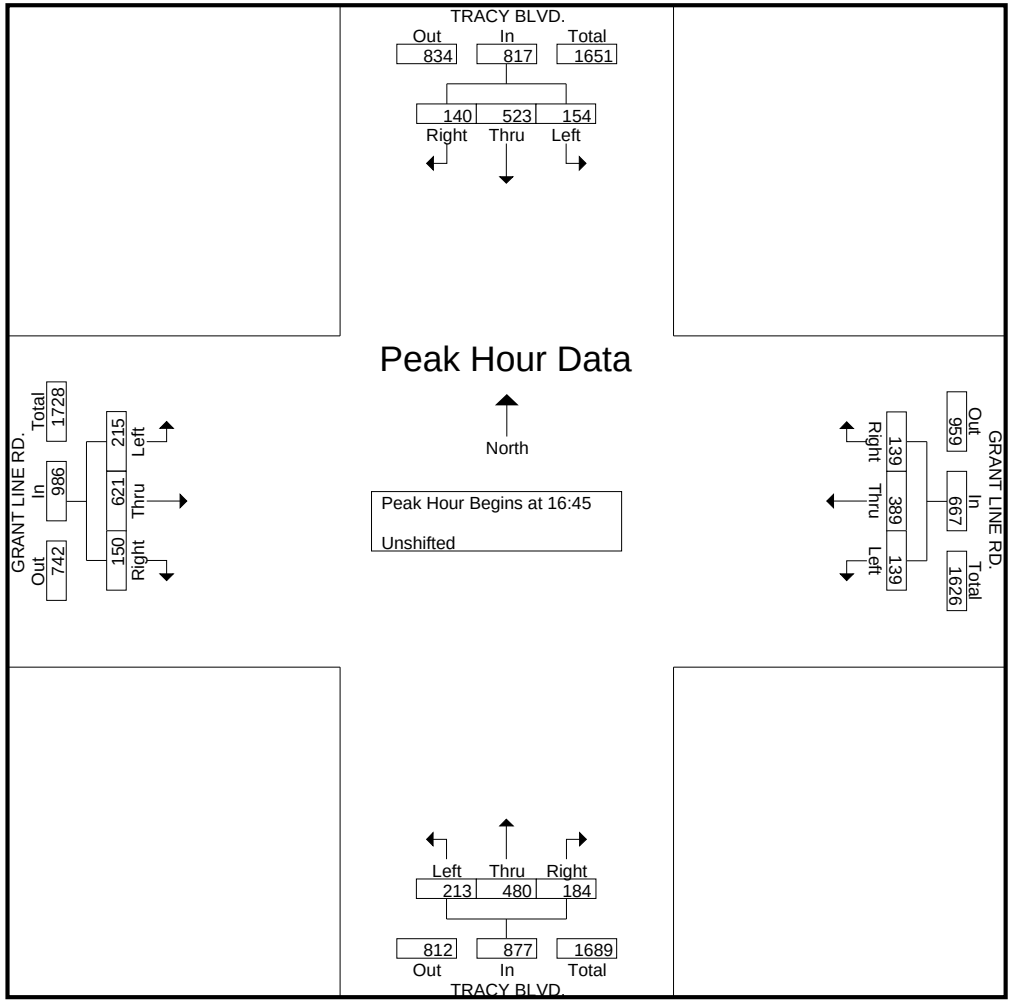

All Traffic Data

(916) 771-8700
Fax 771-8700

TRACY

File Name : HOLLY-LARCH-F
Site Code : 00000000
Start Date : 12/4/2008
Page No : 1

Groups Printed- Unshifted

	HOLLY DR. Southbound				LARCH RD. Westbound				HOLLY DR. Northbound				LARCH RD. Eastbound				
Start Time	Left	Thru	Right	App. Total	Left	Thru	Right	App. Total	Left	Thru	Right	App. Total	Left	Thru	Right	App. Total	Int. Total
16:00	2	10	3	15	0	7	1	8	14	13	0	27	25	2	20	47	97
16:15	0	10	9	19	2	4	1	7	15	7	2	24	17	2	18	37	87
16:30	0	8	7	15	0	2	2	4	15	3	2	20	32	0	17	49	88
16:45	0	15	11	26	1	1	0	2	12	15	3	30	28	0	26	54	112
Total	2	43	30	75	3	14	4	21	56	38	7	101	102	4	81	187	384
17:00	1	17	10	28	1	2	1	4	8	13	2	23	33	1	38	72	127
17:15	0	8	8	16	2	4	1	7	11	6	6	23	19	2	15	36	82
17:30	0	6	9	15	1	1	1	3	10	6	0	16	18	2	14	34	68
17:45	0	4	16	20	0	1	0	1	14	3	1	18	5	0	20	25	64
Total	1	35	43	79	4	8	3	15	43	28	9	80	75	5	87	167	341
Grand Total	3	78	73	154	7	22	7	36	99	66	16	181	177	9	168	354	725
Apprch %	1.9	50.6	47.4		19.4	61.1	19.4		54.7	36.5	8.8		50	2.5	47.5		
Total %	0.4	10.8	10.1	21.2	1	3	1	5	13.7	9.1	2.2	25	24.4	1.2	23.2	48.8	

	HOLLY DR. Southbound				LARCH RD. Westbound				HOLLY DR. Northbound				LARCH RD. Eastbound				
Start Time	Left	Thru	Right	App. Total	Left	Thru	Right	App. Total	Left	Thru	Right	App. Total	Left	Thru	Right	App. Total	Int. Total
Peak Hour Analysis From 16:00 to 17:45 - Peak 1 of 1																	
Peak Hour for Entire Intersection Begins at 16:15																	
16:15	0	10	9	19	**2**	**4**	1	**7**	**15**	7	2	24	17	**2**	18	37	87
16:30	0	8	7	15	0	2	**2**	4	15	3	2	20	32	0	17	49	88
16:45	0	15	**11**	26	1	1	0	2	12	**15**	**3**	**30**	28	0	26	54	112
17:00	**1**	**17**	10	**28**	1	2	1	4	8	13	2	23	**33**	1	**38**	**72**	**127**
Total Volume	1	50	37	88	4	9	4	17	50	38	9	97	110	3	99	212	414
% App. Total	1.1	56.8	42		23.5	52.9	23.5		51.5	39.2	9.3		51.9	1.4	46.7		
PHF	.250	.735	.841	.786	.500	.563	.500	.607	.833	.633	.750	.808	.833	.375	.651	.736	.815

All Traffic Data

(916) 771-8700
Fax 771-8700

TRACY

File Name : HOLLY-LARCH-F
Site Code : 00000000
Start Date : 12/4/2008
Page No : 2

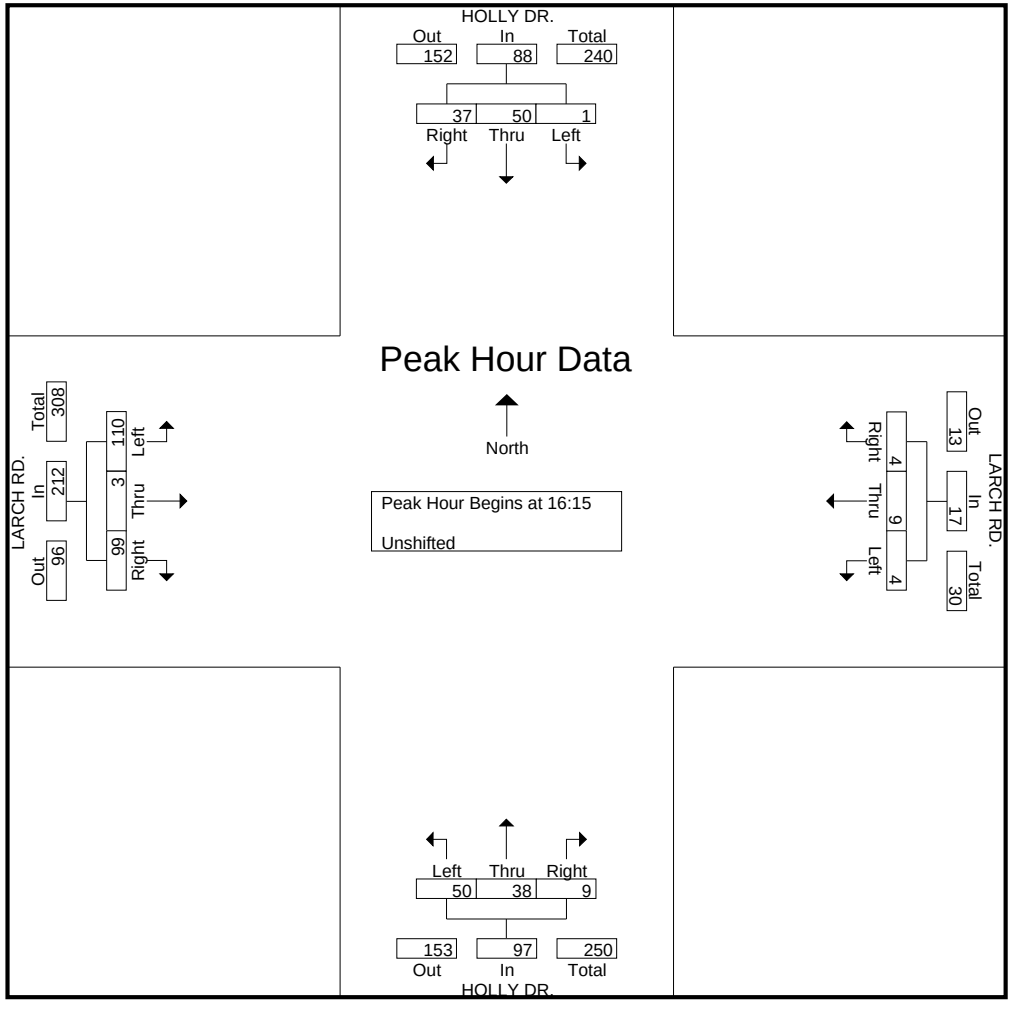

All Traffic Data

(916) 771-8700
Fax 771-8700

TRACY

File Name : HOLLY-GRANT LINE-F
Site Code : 00000000
Start Date : 12/4/2008
Page No : 1

Groups Printed- Unshifted

	HOLLY DR. Southbound				GRANT LINE RD. Westbound				HOLLY DR. Northbound				GRANT LINE RD. Eastbound				
Start Time	Left	Thru	Right	App. Total	Left	Thru	Right	App. Total	Left	Thru	Right	App. Total	Left	Thru	Right	App. Total	Int. Total
16:00	35	39	21	95	16	77	12	105	33	43	16	92	27	143	36	206	498
16:15	20	23	19	62	11	105	12	128	26	29	22	77	15	178	22	215	482
16:30	24	39	26	89	17	88	12	117	28	34	22	84	22	150	18	190	480
16:45	37	39	15	91	10	115	17	142	19	28	16	63	33	169	26	228	524
Total	116	140	81	337	54	385	53	492	106	134	76	316	97	640	102	839	1984
17:00	39	49	18	106	8	109	10	127	22	29	18	69	33	176	24	233	535
17:15	27	33	21	81	12	106	20	138	23	37	12	72	26	170	20	216	507
17:30	19	23	22	64	10	107	14	131	34	26	10	70	21	156	22	199	464
17:45	32	30	18	80	16	92	8	116	19	32	5	56	19	140	20	179	431
Total	117	135	79	331	46	414	52	512	98	124	45	267	99	642	86	827	1937
Grand Total	233	275	160	668	100	799	105	1004	204	258	121	583	196	1282	188	1666	3921
Apprch %	34.9	41.2	24		10	79.6	10.5		35	44.3	20.8		11.8	77	11.3		
Total %	5.9	7	4.1	17	2.6	20.4	2.7	25.6	5.2	6.6	3.1	14.9	5	32.7	4.8	42.5	

	HOLLY DR. Southbound				GRANT LINE RD. Westbound				HOLLY DR. Northbound				GRANT LINE RD. Eastbound				
Start Time	Left	Thru	Right	App. Total	Left	Thru	Right	App. Total	Left	Thru	Right	App. Total	Left	Thru	Right	App. Total	Int. Total
Peak Hour Analysis From 16:00 to 17:45 - Peak 1 of 1																	
Peak Hour for Entire Intersection Begins at 16:30																	
16:30	24	39	**26**	89	**17**	88	12	117	**28**	34	**22**	**84**	22	150	18	190	480
16:45	37	39	15	91	10	**115**	17	**142**	19	28	16	63	**33**	169	**26**	228	524
17:00	**39**	**49**	18	**106**	8	109	10	127	22	29	18	69	33	**176**	24	**233**	**535**
17:15	27	33	21	81	12	106	**20**	138	23	**37**	12	72	26	170	20	216	507
Total Volume	127	160	80	367	47	418	59	524	92	128	68	288	114	665	88	867	2046
% App. Total	34.6	43.6	21.8		9	79.8	11.3		31.9	44.4	23.6		13.1	76.7	10.1		
PHF	.814	.816	.769	.866	.691	.909	.738	.923	.821	.865	.773	.857	.864	.945	.846	.930	.956

All Traffic Data

(916) 771-8700
Fax 771-8700

TRACY

File Name : HOLLY-GRANT LINE-F
Site Code : 00000000
Start Date : 12/4/2008
Page No : 2

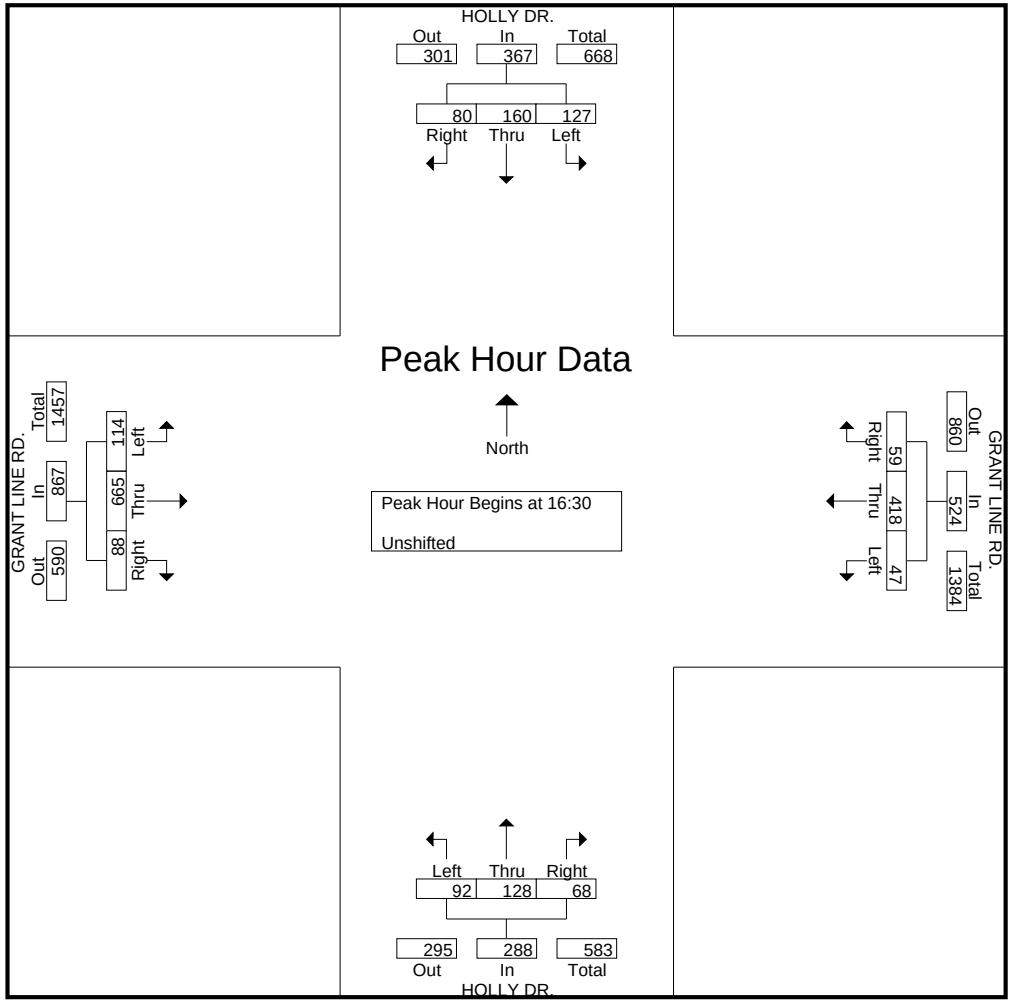

All Traffic Data

(916) 771-8700
Fax 786-2879

TRACY

File Name : 09-7093-001 CORRAL-11TH-F
Site Code : 00000000
Start Date : 24/02/2009
Page No : 1

Groups Printed- Unshifted

	CORRAL HOLLOW RD. Southbound				11TH ST. Westbound				CORRAL HOLLOW RD. Northbound				11TH ST. Eastbound				
Start Time	Left	Thru	Right	App. Total	Left	Thru	Right	App. Total	Left	Thru	Right	App. Total	Left	Thru	Right	App. Total	Int. Total
16:00	56	155	18	229	63	103	65	231	62	184	29	275	93	204	139	436	1171
16:15	78	152	16	246	90	103	78	271	48	168	22	238	100	206	109	415	1170
16:30	64	138	19	221	64	85	63	212	56	166	24	246	89	239	161	489	1168
16:45	87	180	18	285	55	79	71	205	73	201	29	303	114	211	175	500	1293
Total	285	625	71	981	272	370	277	919	239	719	104	1062	396	860	584	1840	4802
17:00	79	179	18	276	82	96	60	238	43	192	26	261	107	239	167	513	1288
17:15	61	171	18	250	79	106	72	257	52	228	18	298	115	224	198	537	1342
17:30	62	176	24	262	60	88	53	201	73	193	18	284	118	176	194	488	1235
17:45	82	172	22	276	77	97	50	224	85	197	27	309	138	163	195	496	1305
Total	284	698	82	1064	298	387	235	920	253	810	89	1152	478	802	754	2034	5170
Grand Total	569	1323	153	2045	570	757	512	1839	492	1529	193	2214	874	1662	1338	3874	9972
Apprch %	27.8	64.7	7.5		31	41.2	27.8		22.2	69.1	8.7		22.6	42.9	34.5		
Total %	5.7	13.3	1.5	20.5	5.7	7.6	5.1	18.4	4.9	15.3	1.9	22.2	8.8	16.7	13.4	38.8	

	CORRAL HOLLOW RD. Southbound				11TH ST. Westbound				CORRAL HOLLOW RD. Northbound				11TH ST. Eastbound				
Start Time	Left	Thru	Right	App. Total	Left	Thru	Right	App. Total	Left	Thru	Right	App. Total	Left	Thru	Right	App. Total	Int. Total
Peak Hour Analysis From 16:00 to 17:45 - Peak 1 of 1																	
Peak Hour for Entire Intersection Begins at 17:00																	
17:00	79	**179**	18	**276**	**82**	96	60	238	43	192	26	261	107	**239**	167	513	1288
17:15	61	171	18	250	79	**106**	**72**	**257**	52	**228**	18	298	115	224	**198**	**537**	**1342**
17:30	62	176	**24**	262	60	88	53	201	73	193	18	284	118	176	194	488	1235
17:45	**82**	172	22	276	77	97	50	224	**85**	197	**27**	**309**	**138**	163	195	496	1305
Total Volume	284	698	82	1064	298	387	235	920	253	810	89	1152	478	802	754	2034	5170
% App. Total	26.7	65.6	7.7		32.4	42.1	25.5		22	70.3	7.7		23.5	39.4	37.1		
PHF	.866	.975	.854	.964	.909	.913	.816	.895	.744	.888	.824	.932	.866	.839	.952	.947	.963

All Traffic Data

(916) 771-8700
Fax 786-2879

TRACY

File Name : 09-7093-001 CORRAL-11TH-F
Site Code : 00000000
Start Date : 24/02/2009
Page No : 2

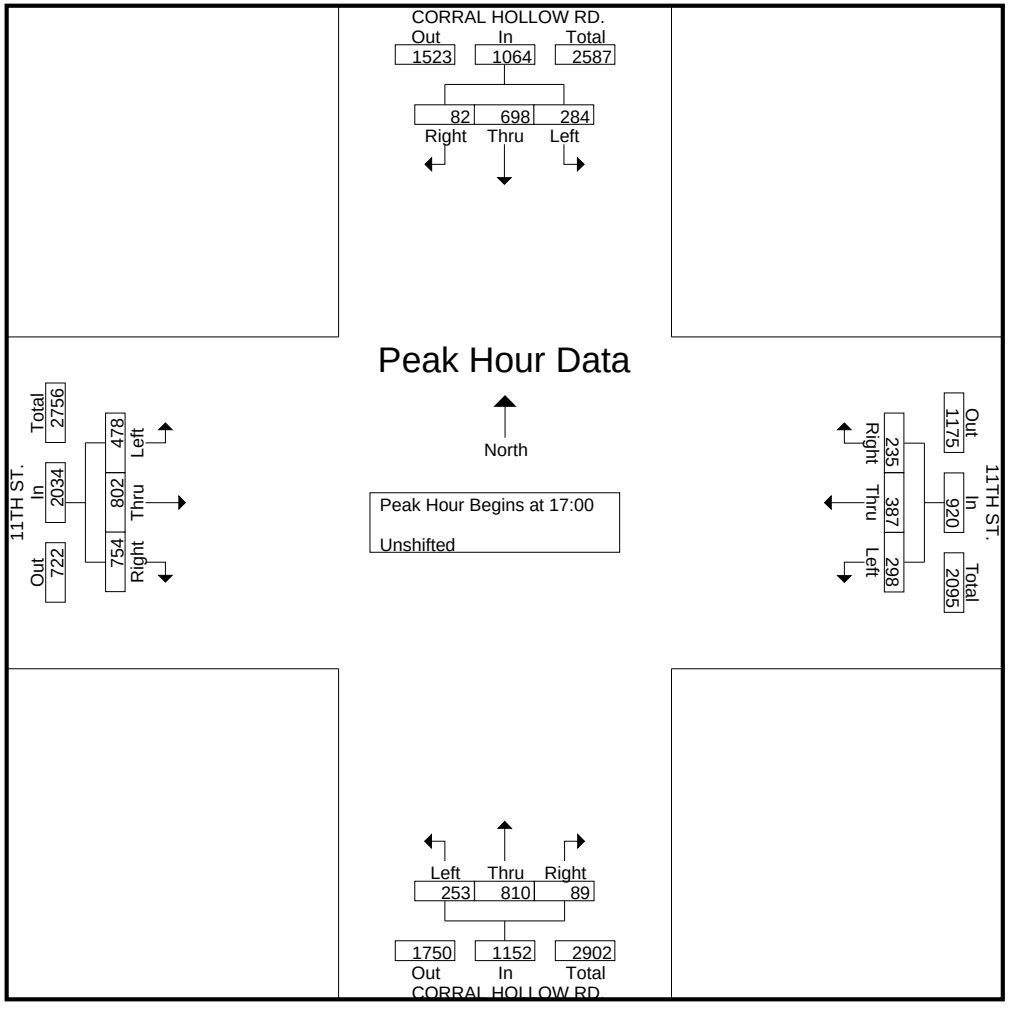

All Traffic Data

(916) 771-8700
Fax 786-2879

TRACY

File Name : 09-7093-002 TRACY-11TH-F
Site Code : 00000000
Start Date : 24/02/2009
Page No : 1

Groups Printed- Unshifted

	TRACY BLVD. Southbound				11TH ST. Westbound				TRACY BLVD. Northbound				11TH ST. Eastbound				
Start Time	Left	Thru	Right	App. Total	Left	Thru	Right	App. Total	Left	Thru	Right	App. Total	Left	Thru	Right	App. Total	Int. Total
16:00	41	140	43	224	50	154	41	245	74	144	34	252	48	187	69	304	1025
16:15	36	120	42	198	67	148	46	261	65	128	21	214	42	168	72	282	955
16:30	32	135	38	205	37	131	34	202	80	125	14	219	54	158	66	278	904
16:45	32	133	51	216	45	106	24	175	62	130	22	214	50	184	71	305	910
Total	141	528	174	843	199	539	145	883	281	527	91	899	194	697	278	1169	3794
17:00	44	150	51	245	70	142	31	243	71	123	15	209	66	150	79	295	992
17:15	31	132	50	213	66	140	49	255	59	118	15	192	44	167	84	295	955
17:30	33	132	40	205	70	127	35	232	60	128	26	214	37	146	64	247	898
17:45	29	149	57	235	41	120	37	198	72	147	37	256	43	151	73	267	956
Total	137	563	198	898	247	529	152	928	262	516	93	871	190	614	300	1104	3801
Grand Total	278	1091	372	1741	446	1068	297	1811	543	1043	184	1770	384	1311	578	2273	7595
Apprch %	16	62.7	21.4		24.6	59	16.4		30.7	58.9	10.4		16.9	57.7	25.4		
Total %	3.7	14.4	4.9	22.9	5.9	14.1	3.9	23.8	7.1	13.7	2.4	23.3	5.1	17.3	7.6	29.9	

	TRACY BLVD. Southbound				11TH ST. Westbound				TRACY BLVD. Northbound				11TH ST. Eastbound				
Start Time	Left	Thru	Right	App. Total	Left	Thru	Right	App. Total	Left	Thru	Right	App. Total	Left	Thru	Right	App. Total	Int. Total
Peak Hour Analysis From 16:00 to 17:45 - Peak 1 of 1																	
Peak Hour for Entire Intersection Begins at 17:00																	
17:00	**44**	**150**	51	**245**	**70**	**142**	31	243	71	123	15	209	**66**	150	79	**295**	**992**
17:15	31	132	50	213	66	140	**49**	**255**	59	118	15	192	44	**167**	**84**	295	955
17:30	33	132	40	205	70	127	35	232	60	128	26	214	37	146	64	247	898
17:45	29	149	**57**	235	41	120	37	198	**72**	**147**	**37**	**256**	43	151	73	267	956
Total Volume	137	563	198	898	247	529	152	928	262	516	93	871	190	614	300	1104	3801
% App. Total	15.3	62.7	22		26.6	57	16.4		30.1	59.2	10.7		17.2	55.6	27.2		
PHF	.778	.938	.868	.916	.882	.931	.776	.910	.910	.878	.628	.851	.720	.919	.893	.936	.958

All Traffic Data

(916) 771-8700
Fax 786-2879

TRACY

File Name : 09-7093-002 TRACY-11TH-F
Site Code : 00000000
Start Date : 24/02/2009
Page No : 2

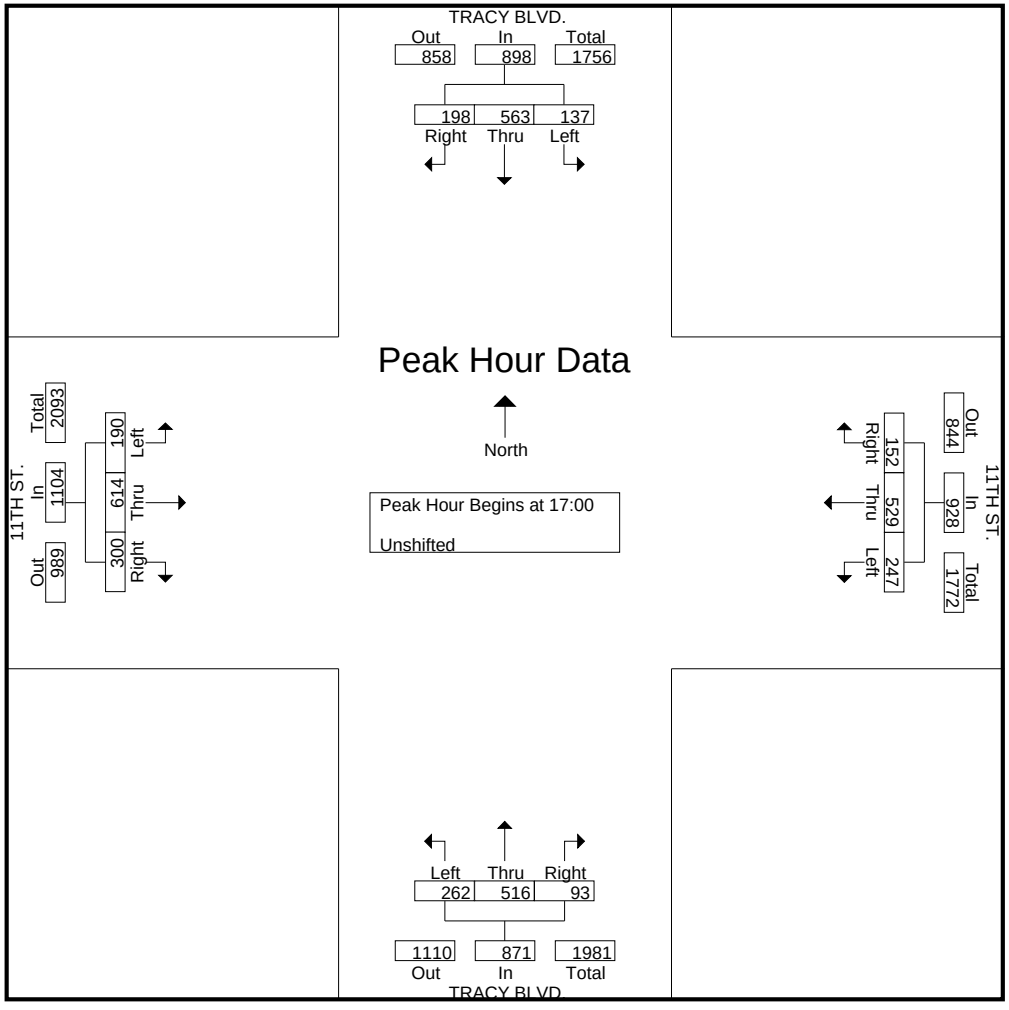

All Traffic Data

(916) 771-8700
Fax 786-2879

TRACY

File Name : 09-7093-003 HOLLY-11TH-F
Site Code : 00000000
Start Date : 24/02/2009
Page No : 1

Groups Printed- Unshifted

	HOLLY DR. Southbound				11TH ST. Westbound				HOLLY DR. Northbound				11TH ST. Eastbound				
Start Time	Left	Thru	Right	App. Total	Left	Thru	Right	App. Total	Left	Thru	Right	App. Total	Left	Thru	Right	App. Total	Int. Total
16:00	20	49	46	115	27	160	19	206	31	44	9	84	33	178	25	236	641
16:15	16	66	56	138	23	153	15	191	31	47	6	84	31	138	40	209	622
16:30	23	50	20	93	22	130	18	170	29	34	12	75	24	157	24	205	543
16:45	16	40	19	75	24	131	13	168	26	49	9	84	27	164	27	218	545
Total	75	205	141	421	96	574	65	735	117	174	36	327	115	637	116	868	2351
17:00	22	38	28	88	21	146	11	178	33	43	13	89	22	170	30	222	577
17:15	19	37	23	79	19	145	8	172	27	33	9	69	15	142	28	185	505
17:30	10	25	23	58	17	144	7	168	29	31	13	73	20	139	23	182	481
17:45	20	29	20	69	18	124	13	155	32	26	10	68	22	137	21	180	472
Total	71	129	94	294	75	559	39	673	121	133	45	299	79	588	102	769	2035
Grand Total	146	334	235	715	171	1133	104	1408	238	307	81	626	194	1225	218	1637	4386
Apprch %	20.4	46.7	32.9		12.1	80.5	7.4		38	49	12.9		11.9	74.8	13.3		
Total %	3.3	7.6	5.4	16.3	3.9	25.8	2.4	32.1	5.4	7	1.8	14.3	4.4	27.9	5	37.3	

	HOLLY DR. Southbound				11TH ST. Westbound				HOLLY DR. Northbound				11TH ST. Eastbound				
Start Time	Left	Thru	Right	App. Total	Left	Thru	Right	App. Total	Left	Thru	Right	App. Total	Left	Thru	Right	App. Total	Int. Total
Peak Hour Analysis From 16:00 to 17:45 - Peak 1 of 1																	
Peak Hour for Entire Intersection Begins at 16:00																	
16:00	20	49	46	115	**27**	**160**	**19**	**206**	**31**	44	9	**84**	**33**	**178**	25	**236**	**641**
16:15	16	**66**	**56**	**138**	23	153	15	191	31	47	6	84	31	138	**40**	209	622
16:30	**23**	50	20	93	22	130	18	170	29	34	**12**	75	24	157	24	205	543
16:45	16	40	19	75	24	131	13	168	26	**49**	9	84	27	164	27	218	545
Total Volume	75	205	141	421	96	574	65	735	117	174	36	327	115	637	116	868	2351
% App. Total	17.8	48.7	33.5		13.1	78.1	8.8		35.8	53.2	11		13.2	73.4	13.4		
PHF	.815	.777	.629	.763	.889	.897	.855	.892	.944	.888	.750	.973	.871	.895	.725	.919	.917

All Traffic Data

(916) 771-8700
Fax 786-2879

TRACY

File Name : 09-7093-003 HOLLY-11TH-F
Site Code : 00000000
Start Date : 24/02/2009
Page No : 2

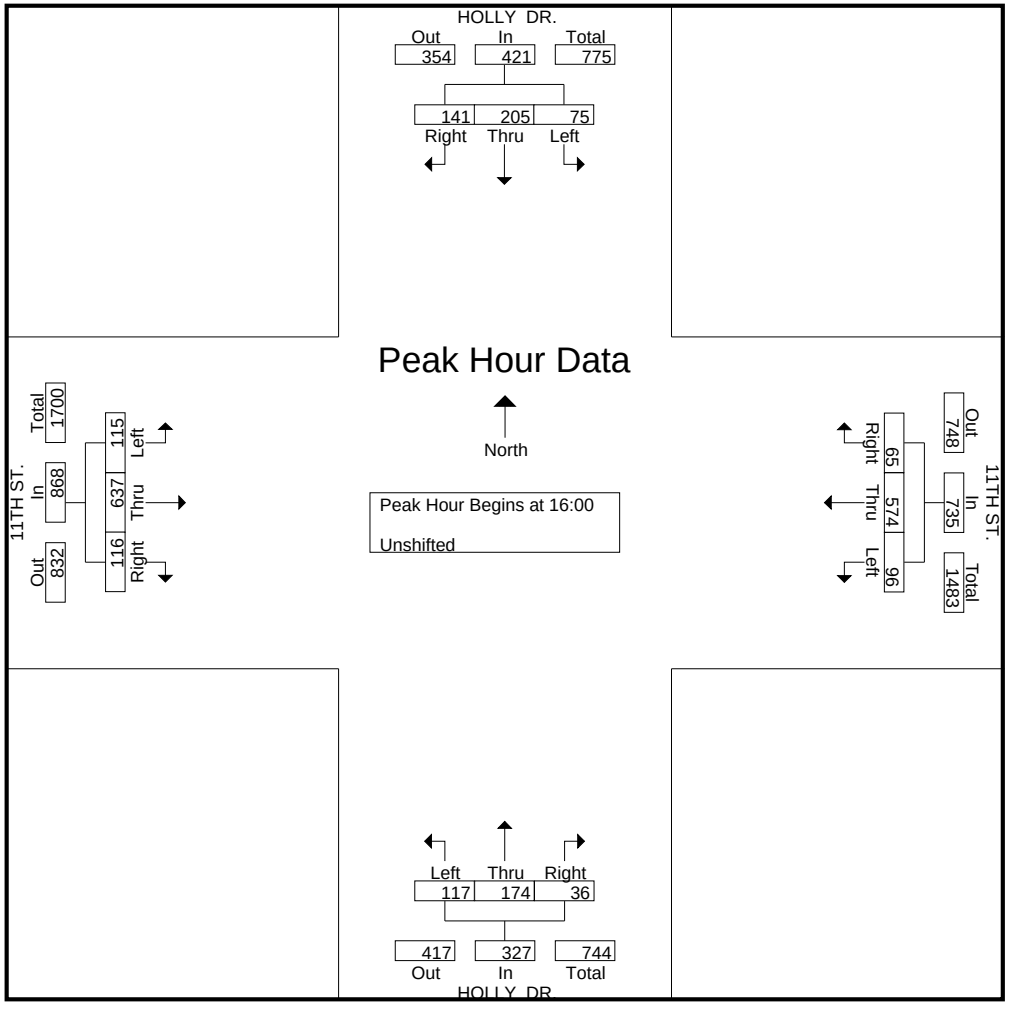

All Traffic Data

(916) 771-8700
Fax 771-8700

TRACY

File Name : CORRAL HOLLOW-LARCH-F
Site Code : 00000000
Start Date : 12/6/2008
Page No : 1

Groups Printed- Unshifted

	CORRAL HOLLOW RD. Southbound				LARCH RD. Westbound				CORRAL HOLLOW RD. Northbound				LARCH RD. Eastbound				
Start Time	Left	Thru	Right	App. Total	Left	Thru	Right	App. Total	Left	Thru	Right	App. Total	Left	Thru	Right	App. Total	Int. Total
13:00	1	7	2	10	17	6	8	31	3	5	28	36	1	4	10	15	92
13:15	1	9	1	11	32	10	10	52	2	11	30	43	0	9	11	20	126
13:30	2	5	1	8	21	9	11	41	8	8	24	40	0	10	12	22	111
13:45	0	6	3	9	15	5	5	25	7	7	20	34	1	10	14	25	93
Total	4	27	7	38	85	30	34	149	20	31	102	153	2	33	47	82	422
14:00	2	6	2	10	18	9	10	37	5	9	14	28	0	11	15	26	101
14:15	1	9	3	13	32	9	10	51	4	7	18	29	1	9	12	22	115
14:30	2	5	1	8	14	6	7	27	3	5	17	25	3	8	11	22	82
14:45	2	14	1	17	8	6	8	22	3	7	14	24	3	10	14	27	90
Total	7	34	7	48	72	30	35	137	15	28	63	106	7	38	52	97	388
15:00	1	3	0	4	29	5	6	40	5	5	20	30	1	10	12	23	97
15:15	1	8	4	13	22	4	5	31	2	8	22	32	3	6	9	18	94
15:30	1	13	0	14	26	7	9	42	2	3	15	20	0	8	11	19	95
15:45	1	15	7	23	20	4	5	29	4	7	17	28	3	6	7	16	96
Total	4	39	11	54	97	20	25	142	13	23	74	110	7	30	39	76	382
16:00	1	8	0	9	20	4	7	31	2	9	12	23	3	9	13	25	88
16:15	1	8	2	11	23	1	1	25	3	16	25	44	4	13	11	28	108
16:30	2	9	0	11	21	3	7	31	2	10	17	29	4	9	12	25	96
16:45	5	8	2	15	23	8	10	41	3	23	22	48	1	9	13	23	127
Total	9	33	4	46	87	16	25	128	10	58	76	144	12	40	49	101	419
Grand Total	24	133	29	186	341	96	119	556	58	140	315	513	28	141	187	356	1611
Apprch %	12.9	71.5	15.6		61.3	17.3	21.4		11.3	27.3	61.4		7.9	39.6	52.5		
Total %	1.5	8.3	1.8	11.5	21.2	6	7.4	34.5	3.6	8.7	19.6	31.8	1.7	8.8	11.6	22.1	

	CORRAL HOLLOW RD. Southbound				LARCH RD. Westbound				CORRAL HOLLOW RD. Northbound				LARCH RD. Eastbound				
Start Time	Left	Thru	Right	App. Total	Left	Thru	Right	App. Total	Left	Thru	Right	App. Total	Left	Thru	Right	App. Total	Int. Total
Peak Hour Analysis From 13:00 to 16:45 - Peak 1 of 1																	
Peak Hour for Entire Intersection Begins at 13:15																	
13:15	1	**9**	1	**11**	**32**	**10**	10	**52**	2	**11**	**30**	**43**	0	9	11	20	**126**
13:30	**2**	5	1	8	21	9	**11**	41	**8**	8	24	40	0	10	12	22	111
13:45	0	6	**3**	9	15	5	5	25	7	7	20	34	**1**	10	14	25	93
14:00	2	6	2	10	18	9	10	37	5	9	14	28	0	**11**	**15**	**26**	101
Total Volume	5	26	7	38	86	33	36	155	22	35	88	145	1	40	52	93	431
% App. Total	13.2	68.4	18.4		55.5	21.3	23.2		15.2	24.1	60.7		1.1	43	55.9		
PHF	.625	.722	.583	.864	.672	.825	.818	.745	.688	.795	.733	.843	.250	.909	.867	.894	.855

All Traffic Data

(916) 771-8700
Fax 771-8700

TRACY

File Name : CORRAL HOLLOW-LARCH-F
Site Code : 00000000
Start Date : 12/6/2008
Page No : 2

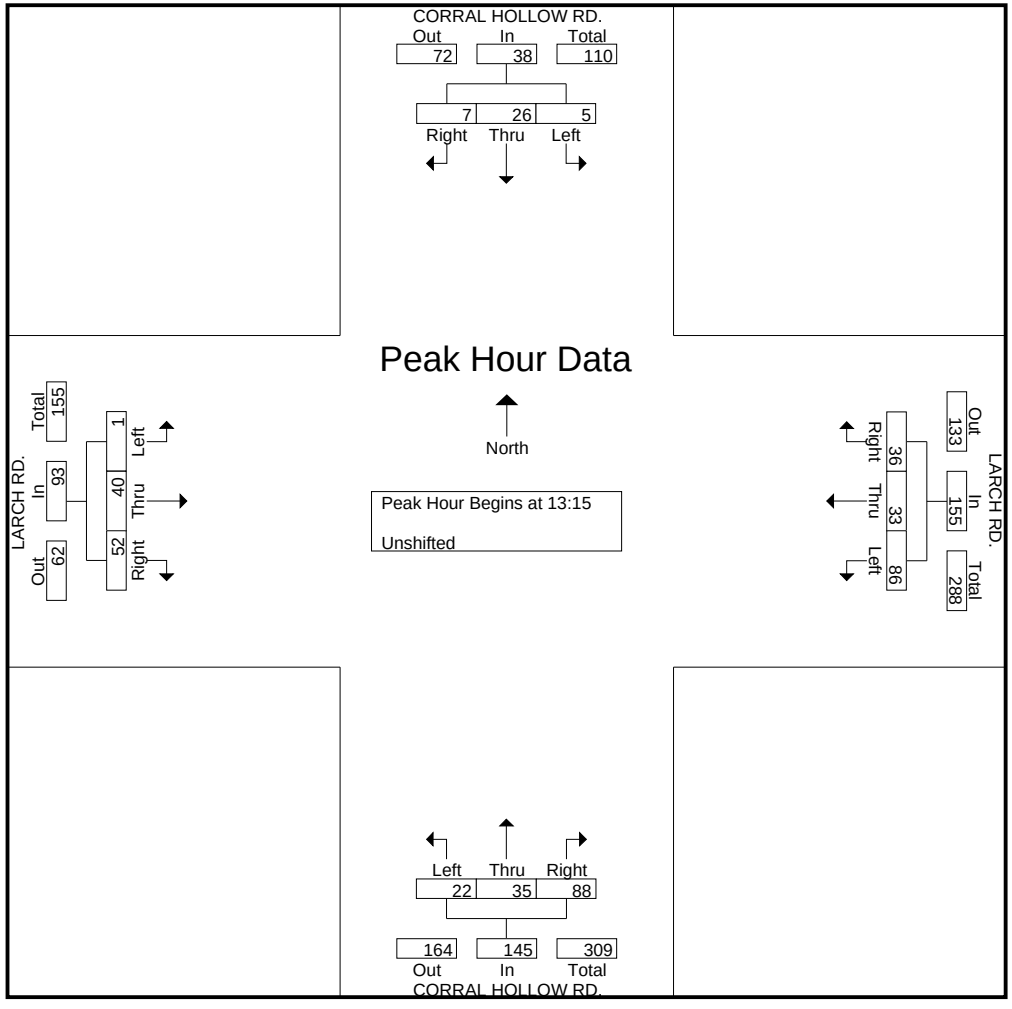

All Traffic Data

(916) 771-8700
Fax 771-8700

TRACY

File Name : CORRAL HOLLOW-VALLEY MALL-F
Site Code : 00000000
Start Date : 12/6/2008
Page No : 1

Groups Printed- Unshifted

	CORRAL HOLLOW RD. Southbound				Westbound				CORRAL HOLLOW RD. Northbound				WEST VALLEY MALL Eastbound				
Start Time	Left	Thru	Right	App. Total	Left	Thru	Right	App. Total	Left	Thru	Right	App. Total	Left	Thru	Right	App. Total	Int. Total
13:00	0	23	10	33	0	0	0	0	137	24	0	161	14	0	102	116	310
13:15	0	24	21	45	0	0	0	0	139	28	0	167	13	0	126	139	351
13:30	0	20	18	38	0	0	0	0	134	34	0	168	13	0	119	132	338
13:45	0	17	12	29	0	0	0	0	166	25	0	191	11	0	134	145	365
Total	0	84	61	145	0	0	0	0	576	111	0	687	51	0	481	532	1364
14:00	0	21	11	32	0	0	0	0	147	17	0	164	13	0	139	152	348
14:15	0	20	25	45	0	0	0	0	144	21	0	165	11	0	105	116	326
14:30	0	25	15	40	0	0	0	0	135	16	0	151	13	0	133	146	337
14:45	0	23	19	42	0	0	0	0	126	15	0	141	9	0	121	130	313
Total	0	89	70	159	0	0	0	0	552	69	0	621	46	0	498	544	1324
15:00	0	17	21	38	0	0	0	0	141	21	0	162	14	0	140	154	354
15:15	0	23	19	42	0	0	0	0	145	22	0	167	13	0	148	161	370
15:30	0	25	21	46	0	0	0	0	145	13	0	158	9	0	159	168	372
15:45	0	24	17	41	0	0	0	0	136	19	0	155	11	0	159	170	366
Total	0	89	78	167	0	0	0	0	567	75	0	642	47	0	606	653	1462
16:00	0	19	15	34	0	0	0	0	121	13	0	134	11	0	173	184	352
16:15	0	23	18	41	0	0	0	0	130	24	0	154	18	0	163	181	376
16:30	0	26	15	41	0	0	0	0	104	15	0	119	15	0	147	162	322
16:45	0	23	17	40	0	0	0	0	153	29	0	182	20	0	135	155	377
Total	0	91	65	156	0	0	0	0	508	81	0	589	64	0	618	682	1427
Grand Total	0	353	274	627	0	0	0	0	2203	336	0	2539	208	0	2203	2411	5577
Apprch %	0	56.3	43.7		0	0	0		86.8	13.2	0		8.6	0	91.4		
Total %	0	6.3	4.9	11.2	0	0	0	0	39.5	6	0	45.5	3.7	0	39.5	43.2	

	CORRAL HOLLOW RD. Southbound				Westbound				CORRAL HOLLOW RD. Northbound				WEST VALLEY MALL Eastbound				
Start Time	Left	Thru	Right	App. Total	Left	Thru	Right	App. Total	Left	Thru	Right	App. Total	Left	Thru	Right	App. Total	Int. Total
Peak Hour Analysis From 13:00 to 16:45 - Peak 1 of 1																	
Peak Hour for Entire Intersection Begins at 15:30																	
15:30	0	**25**	**21**	**46**	0	0	0	0	**145**	13	0	**158**	9	0	159	168	372
15:45	0	24	17	41	0	0	0	0	136	19	0	155	11	0	159	170	366
16:00	0	19	15	34	0	0	0	0	121	13	0	134	11	0	**173**	**184**	352
16:15	0	23	18	41	0	0	0	0	130	**24**	0	154	**18**	0	163	181	**376**
Total Volume	0	91	71	162	0	0	0	0	532	69	0	601	49	0	654	703	1466
% App. Total	0	56.2	43.8		0	0	0		88.5	11.5	0		7	0	93		
PHF	.000	.910	.845	.880	.000	.000	.000	.000	.917	.719	.000	.951	.681	.000	.945	.955	.975

All Traffic Data

(916) 771-8700
Fax 771-8700

TRACY

File Name : CORRAL HOLLOW-VALLEY MALL-F
Site Code : 00000000
Start Date : 12/6/2008
Page No : 2

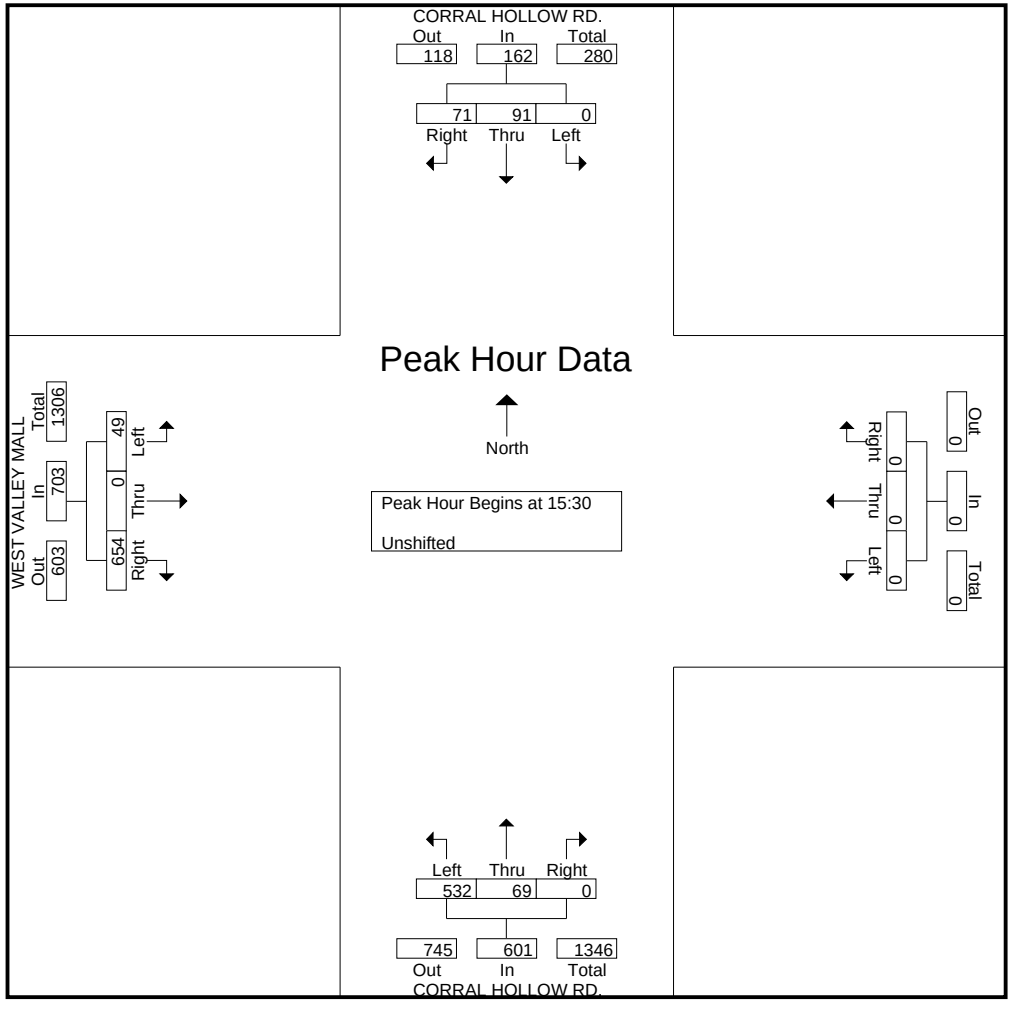

All Traffic Data

(916) 771-8700
Fax 771-8700

TRACY

File Name : CORRAL HOLLOW-GRANT LINE-F
Site Code : 00000000
Start Date : 12/6/2008
Page No : 1

Groups Printed- Unshifted

	CORRAL HOLLOW RD. Southbound				GRANT LINE RD. Westbound				CORRAL HOLLOW RD. Northbound				GRANT LINE RD. Eastbound				
Start Time	Left	Thru	Right	App. Total	Left	Thru	Right	App. Total	Left	Thru	Right	App. Total	Left	Thru	Right	App. Total	Int. Total
13:00	33	67	16	116	40	102	29	171	159	104	26	289	16	135	164	315	891
13:15	34	101	20	155	36	132	36	204	147	107	46	300	34	110	183	327	986
13:30	23	96	23	142	42	116	36	194	116	111	47	274	32	123	158	313	923
13:45	37	88	20	145	32	128	39	199	138	128	48	314	31	140	150	321	979
Total	127	352	79	558	150	478	140	768	560	450	167	1177	113	508	655	1276	3779
14:00	41	95	29	165	42	96	33	171	167	134	33	334	20	137	135	292	962
14:15	35	61	32	128	42	127	35	204	136	103	38	277	17	137	173	327	936
14:30	44	86	24	154	49	130	35	214	147	94	36	277	14	132	157	303	948
14:45	37	93	18	148	31	110	37	178	153	94	34	281	19	143	185	347	954
Total	157	335	103	595	164	463	140	767	603	425	141	1169	70	549	650	1269	3800
15:00	34	94	26	154	47	90	49	186	132	101	39	272	29	130	151	310	922
15:15	43	97	28	168	40	101	46	187	148	100	40	288	23	128	155	306	949
15:30	41	125	22	188	40	103	28	171	128	103	29	260	20	126	118	264	883
15:45	42	108	16	166	46	95	34	175	139	105	34	278	18	122	143	283	902
Total	160	424	92	676	173	389	157	719	547	409	142	1098	90	506	567	1163	3656
16:00	47	120	31	198	44	106	31	181	120	92	31	243	25	142	158	325	947
16:15	53	111	23	187	41	109	36	186	129	90	29	248	28	159	137	324	945
16:30	50	103	20	173	39	109	21	169	129	75	34	238	20	153	167	340	920
16:45	39	102	16	157	38	104	45	187	125	103	31	259	31	171	130	332	935
Total	189	436	90	715	162	428	133	723	503	360	125	988	104	625	592	1321	3747
Grand Total	633	1547	364	2544	649	1758	570	2977	2213	1644	575	4432	377	2188	2464	5029	14982
Apprch %	24.9	60.8	14.3		21.8	59.1	19.1		49.9	37.1	13		7.5	43.5	49		
Total %	4.2	10.3	2.4	17	4.3	11.7	3.8	19.9	14.8	11	3.8	29.6	2.5	14.6	16.4	33.6	

	CORRAL HOLLOW RD. Southbound				GRANT LINE RD. Westbound				CORRAL HOLLOW RD. Northbound				GRANT LINE RD. Eastbound				
Start Time	Left	Thru	Right	App. Total	Left	Thru	Right	App. Total	Left	Thru	Right	App. Total	Left	Thru	Right	App. Total	Int. Total
Peak Hour Analysis From 13:00 to 16:45 - Peak 1 of 1																	
Peak Hour for Entire Intersection Begins at 13:15																	
13:15	34	**101**	20	155	36	**132**	36	**204**	147	107	46	300	**34**	110	**183**	**327**	**986**
13:30	23	96	23	142	**42**	116	36	194	116	111	47	274	32	123	158	313	923
13:45	37	88	20	145	32	128	**39**	199	138	128	**48**	314	31	**140**	150	321	979
14:00	**41**	95	**29**	**165**	42	96	33	171	**167**	**134**	33	**334**	20	137	135	292	962
Total Volume	135	380	92	607	152	472	144	768	568	480	174	1222	117	510	626	1253	3850
% App. Total	22.2	62.6	15.2		19.8	61.5	18.8		46.5	39.3	14.2		9.3	40.7	50		
PHF	.823	.941	.793	.920	.905	.894	.923	.941	.850	.896	.906	.915	.860	.911	.855	.958	.976

All Traffic Data

(916) 771-8700
Fax 771-8700

TRACY

File Name : CORRAL HOLLOW-GRANT LINE-F
Site Code : 00000000
Start Date : 12/6/2008
Page No : 2

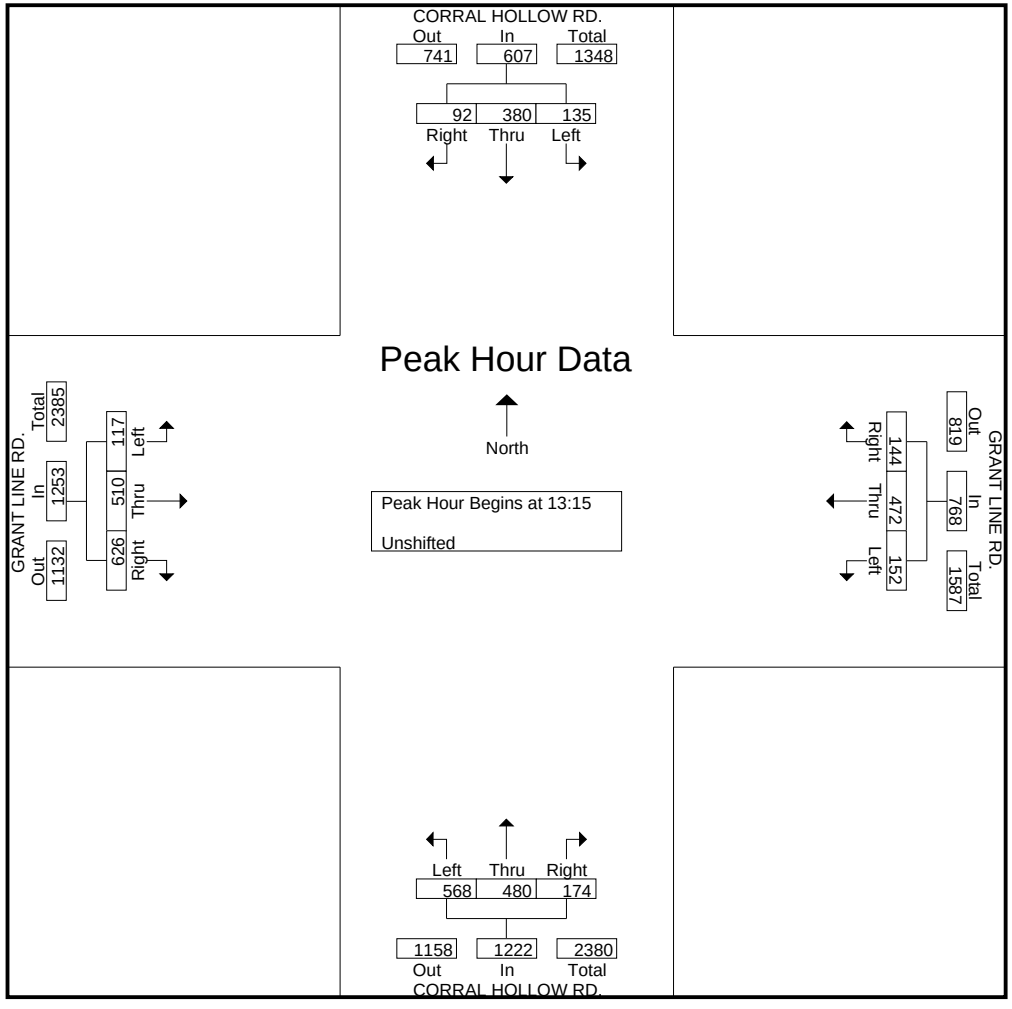

All Traffic Data

(916) 771-8700
Fax 771-8700

TRACY

File Name : TRACY-LARCH-F
Site Code : 00000000
Start Date : 12/6/2008
Page No : 1

Groups Printed- Unshifted

	TRACY BLVD. Southbound				LARCH RD. Westbound				TRACY BLVD. Northbound				LARCH RD. Eastbound				
Start Time	Left	Thru	Right	App. Total	Left	Thru	Right	App. Total	Left	Thru	Right	App. Total	Left	Thru	Right	App. Total	Int. Total
13:00	1	10	1	12	34	13	3	50	19	28	25	72	2	20	18	40	174
13:15	1	24	1	26	48	13	1	62	19	18	27	64	2	20	24	46	198
13:30	1	18	0	19	22	11	1	34	23	22	29	74	1	18	13	32	159
13:45	2	26	0	28	32	9	2	43	26	20	30	76	4	8	21	33	180
Total	5	78	2	85	136	46	7	189	87	88	111	286	9	66	76	151	711
14:00	1	18	0	19	21	11	3	35	28	25	30	83	2	7	19	28	165
14:15	1	23	1	25	23	19	1	43	27	32	25	84	0	15	20	35	187
14:30	1	22	0	23	20	12	3	35	12	23	26	61	2	12	22	36	155
14:45	0	18	0	18	18	6	3	27	19	30	16	65	1	11	12	24	134
Total	3	81	1	85	82	48	10	140	86	110	97	293	5	45	73	123	641
15:00	1	17	0	18	23	12	3	38	32	21	14	67	1	18	19	38	161
15:15	1	21	1	23	24	13	1	38	16	26	28	70	1	10	22	33	164
15:30	2	24	1	27	20	12	1	33	20	30	19	69	1	9	16	26	155
15:45	0	21	0	21	18	9	0	27	23	24	17	64	0	11	15	26	138
Total	4	83	2	89	85	46	5	136	91	101	78	270	3	48	72	123	618
16:00	4	22	2	28	28	12	1	41	15	27	11	53	2	11	18	31	153
16:15	2	22	6	30	26	11	0	37	22	33	20	75	5	15	20	40	182
16:30	2	31	2	35	21	5	4	30	28	36	23	87	2	12	31	45	197
16:45	2	19	1	22	17	14	1	32	17	37	15	69	1	11	14	26	149
Total	10	94	11	115	92	42	6	140	82	133	69	284	10	49	83	142	681
Grand Total	22	336	16	374	395	182	28	605	346	432	355	1133	27	208	304	539	2651
Apprch %	5.9	89.8	4.3		65.3	30.1	4.6		30.5	38.1	31.3		5	38.6	56.4		
Total %	0.8	12.7	0.6	14.1	14.9	6.9	1.1	22.8	13.1	16.3	13.4	42.7	1	7.8	11.5	20.3	

	TRACY BLVD. Southbound				LARCH RD. Westbound				TRACY BLVD. Northbound				LARCH RD. Eastbound				
Start Time	Left	Thru	Right	App. Total	Left	Thru	Right	App. Total	Left	Thru	Right	App. Total	Left	Thru	Right	App. Total	Int. Total
Peak Hour Analysis From 13:00 to 16:45 - Peak 1 of 1																	
Peak Hour for Entire Intersection Begins at 13:00																	
13:00	1	10	**1**	12	34	**13**	**3**	50	19	**28**	25	72	2	**20**	18	40	174
13:15	1	24	1	26	**48**	13	1	**62**	19	18	27	64	2	20	**24**	**46**	**198**
13:30	1	18	0	19	22	11	1	34	23	22	29	74	1	18	13	32	159
13:45	**2**	**26**	0	**28**	32	9	2	43	**26**	20	**30**	**76**	**4**	8	21	33	180
Total Volume	5	78	2	85	136	46	7	189	87	88	111	286	9	66	76	151	711
% App. Total	5.9	91.8	2.4		72	24.3	3.7		30.4	30.8	38.8		6	43.7	50.3		
PHF	.625	.750	.500	.759	.708	.885	.583	.762	.837	.786	.925	.941	.563	.825	.792	.821	.898

All Traffic Data

(916) 771-8700
Fax 771-8700

TRACY

File Name : TRACY-LARCH-F
Site Code : 00000000
Start Date : 12/6/2008
Page No : 2

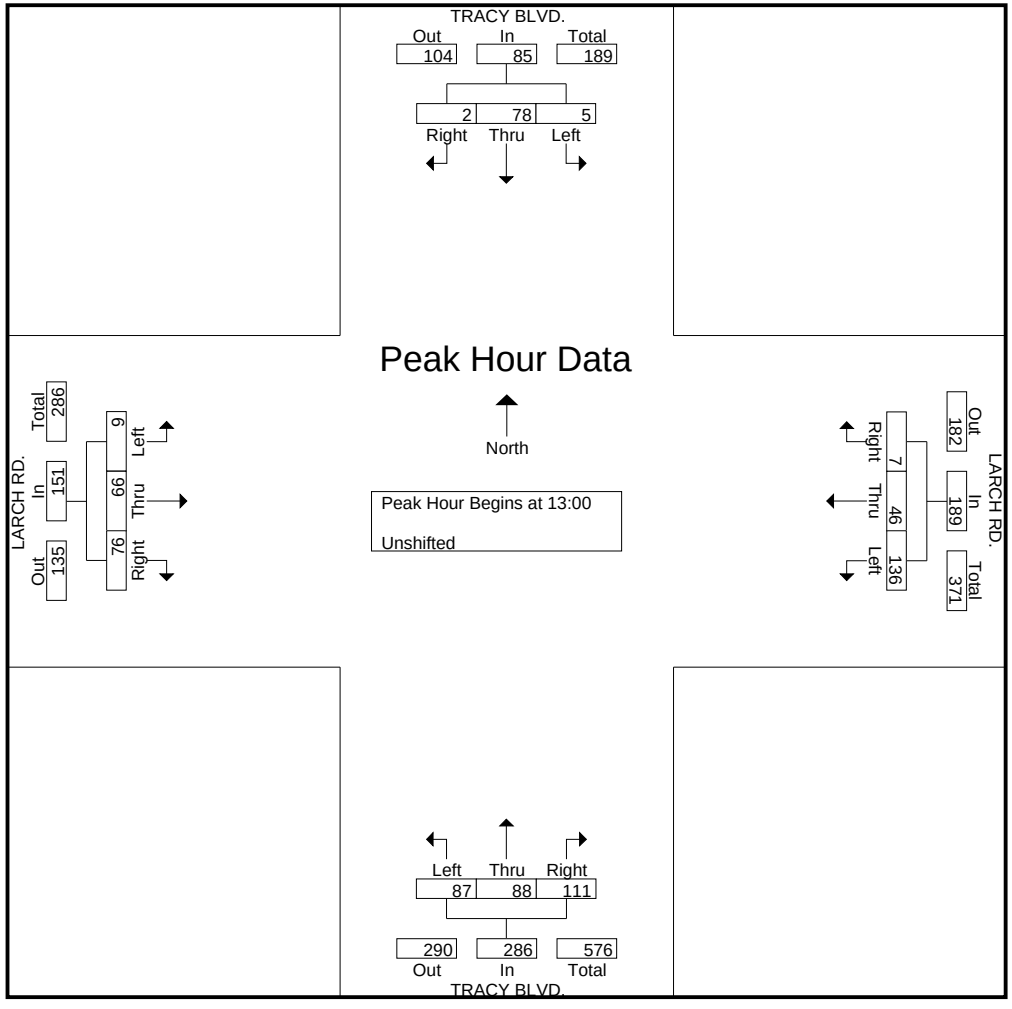

All Traffic Data

(916) 771-8700
Fax 771-8700

TRACY

File Name : TRACY-WB 205 RAMPS-F
Site Code : 00000000
Start Date : 12/6/2008
Page No : 1

Groups Printed- Unshifted

	TRACY BLVD. Southbound				WB 205 OFF RAMP Westbound				TRACY BLVD. Northbound				WB 205 ON RAMP Eastbound				
Start Time	Left	Thru	Right	App. Total	Left	Thru	Right	App. Total	Left	Thru	Right	App. Total	Left	Thru	Right	App. Total	Int. Total
13:00	0	76	21	97	75	0	21	96	69	76	0	145	0	0	0	0	338
13:15	0	93	28	121	63	1	20	84	55	63	0	118	0	0	0	0	323
13:30	0	59	26	85	92	3	22	117	66	64	0	130	0	0	0	0	332
13:45	0	57	24	81	83	1	23	107	53	71	0	124	0	0	0	0	312
Total	0	285	99	384	313	5	86	404	243	274	0	517	0	0	0	0	1305
14:00	0	64	24	88	75	3	24	102	56	76	0	132	0	0	0	0	322
14:15	0	64	26	90	75	3	34	112	40	66	0	106	0	0	0	0	308
14:30	0	78	27	105	72	1	33	106	54	63	0	117	0	0	0	0	328
14:45	0	60	38	98	63	4	24	91	41	51	0	92	0	0	0	0	281
Total	0	266	115	381	285	11	115	411	191	256	0	447	0	0	0	0	1239
15:00	0	71	31	102	70	1	32	103	61	72	0	133	0	0	0	0	338
15:15	0	71	24	95	73	0	26	99	55	63	0	118	0	0	0	0	312
15:30	0	61	26	87	80	0	29	109	50	78	0	128	0	0	0	0	324
15:45	0	63	27	90	87	2	29	118	45	62	0	107	0	0	0	0	315
Total	0	266	108	374	310	3	116	429	211	275	0	486	0	0	0	0	1289
16:00	0	85	25	110	88	1	30	119	56	61	0	117	0	0	0	0	346
16:15	0	70	27	97	89	1	20	110	57	61	0	118	0	0	0	0	325
16:30	0	84	28	112	80	1	27	108	49	75	0	124	0	0	0	0	344
16:45	0	48	25	73	51	3	15	69	50	79	0	129	0	0	0	0	271
Total	0	287	105	392	308	6	92	406	212	276	0	488	0	0	0	0	1286
Grand Total	0	1104	427	1531	1216	25	409	1650	857	1081	0	1938	0	0	0	0	5119
Apprch %	0	72.1	27.9		73.7	1.5	24.8		44.2	55.8	0		0	0	0		
Total %	0	21.6	8.3	29.9	23.8	0.5	8	32.2	16.7	21.1	0	37.9	0	0	0	0	

	TRACY BLVD. Southbound				WB 205 OFF RAMP Westbound				TRACY BLVD. Northbound				WB 205 ON RAMP Eastbound				
Start Time	Left	Thru	Right	App. Total	Left	Thru	Right	App. Total	Left	Thru	Right	App. Total	Left	Thru	Right	App. Total	Int. Total
Peak Hour Analysis From 13:00 to 16:45 - Peak 1 of 1																	
Peak Hour for Entire Intersection Begins at 15:45																	
15:45	0	63	27	90	87	**2**	29	118	45	62	0	107	0	0	0	0	315
16:00	0	**85**	25	110	88	1	**30**	**119**	56	61	0	117	0	0	0	0	**346**
16:15	0	70	27	97	**89**	1	20	110	**57**	61	0	118	0	0	0	0	325
16:30	0	84	**28**	**112**	80	1	27	108	49	**75**	0	**124**	0	0	0	0	344
Total Volume	0	302	107	409	344	5	106	455	207	259	0	466	0	0	0	0	1330
% App. Total	0	73.8	26.2		75.6	1.1	23.3		44.4	55.6	0		0	0	0		
PHF	.000	.888	.955	.913	.966	.625	.883	.956	.908	.863	.000	.940	.000	.000	.000	.000	.961

All Traffic Data

(916) 771-8700
Fax 771-8700

TRACY

File Name : TRACY-WB 205 RAMPS-F
Site Code : 00000000
Start Date : 12/6/2008
Page No : 2

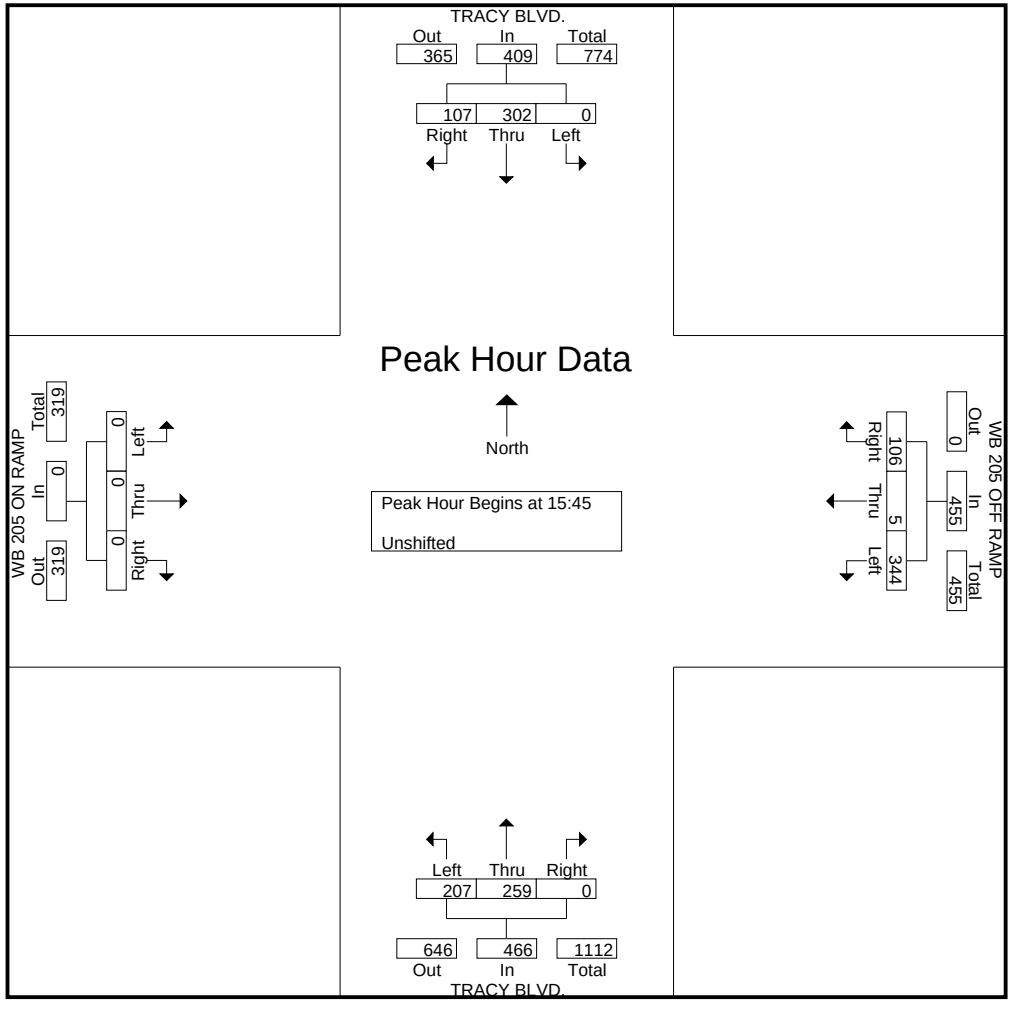

All Traffic Data

(916) 771-8700
Fax 771-8700

TRACY

File Name : TRACY-EB 205 RAMPS-F
Site Code : 00000000
Start Date : 12/6/2008
Page No : 1

Groups Printed- Unshifted

	TRACY BLVD. Southbound				EB 205 ON RAMP Westbound				TRACY BLVD. Northbound				EB 205 OFF RAMP Eastbound				
Start Time	Left	Thru	Right	App. Total	Left	Thru	Right	App. Total	Left	Thru	Right	App. Total	Left	Thru	Right	App. Total	Int. Total
13:00	16	129	0	145	0	0	0	0	0	122	67	189	22	2	56	80	414
13:15	29	139	0	168	0	0	0	0	0	103	85	188	19	1	57	77	433
13:30	13	127	0	140	0	0	0	0	0	117	75	192	22	0	48	70	402
13:45	20	138	0	158	0	0	0	0	0	111	76	187	12	2	52	66	411
Total	78	533	0	611	0	0	0	0	0	453	303	756	75	5	213	293	1660
14:00	13	127	0	140	0	0	0	0	0	117	85	202	8	0	44	52	394
14:15	17	129	0	146	0	0	0	0	0	101	56	157	16	1	43	60	363
14:30	23	130	0	153	0	0	0	0	0	110	75	185	10	4	54	68	406
14:45	14	97	0	111	0	0	0	0	0	77	58	135	18	2	56	76	322
Total	67	483	0	550	0	0	0	0	0	405	274	679	52	7	197	256	1485
15:00	16	116	0	132	0	0	0	0	0	114	75	189	19	3	53	75	396
15:15	20	119	0	139	0	0	0	0	0	106	76	182	15	1	50	66	387
15:30	26	118	0	144	0	0	0	0	0	101	65	166	25	4	63	92	402
15:45	27	121	0	148	0	0	0	0	0	96	76	172	19	4	0	23	343
Total	89	474	0	563	0	0	0	0	0	417	292	709	78	12	166	256	1528
16:00	25	155	0	180	0	0	0	0	0	94	85	179	21	1	56	78	437
16:15	17	139	0	156	0	0	0	0	0	93	66	159	21	0	64	85	400
16:30	33	139	0	172	0	0	0	0	0	108	68	176	20	8	75	103	451
16:45	10	94	0	104	0	0	0	0	0	98	66	164	29	8	67	104	372
Total	85	527	0	612	0	0	0	0	0	393	285	678	91	17	262	370	1660
Grand Total	319	2017	0	2336	0	0	0	0	0	1668	1154	2822	296	41	838	1175	6333
Apprch %	13.7	86.3	0		0	0	0		0	59.1	40.9		25.2	3.5	71.3		
Total %	5	31.8	0	36.9	0	0	0	0	0	26.3	18.2	44.6	4.7	0.6	13.2	18.6	

	TRACY BLVD. Southbound				EB 205 ON RAMP Westbound				TRACY BLVD. Northbound				EB 205 OFF RAMP Eastbound				
Start Time	Left	Thru	Right	App. Total	Left	Thru	Right	App. Total	Left	Thru	Right	App. Total	Left	Thru	Right	App. Total	Int. Total
Peak Hour Analysis From 13:00 to 16:45 - Peak 1 of 1																	
Peak Hour for Entire Intersection Begins at 13:00																	
13:00	16	129	0	145	0	0	0	0	0	**122**	67	189	**22**	**2**	56	**80**	414
13:15	**29**	**139**	0	**168**	0	0	0	0	0	103	**85**	188	19	1	**57**	77	**433**
13:30	13	127	0	140	0	0	0	0	0	117	75	**192**	22	0	48	70	402
13:45	20	138	0	158	0	0	0	0	0	111	76	187	12	2	52	66	411
Total Volume	78	533	0	611	0	0	0	0	0	453	303	756	75	5	213	293	1660
% App. Total	12.8	87.2	0		0	0	0		0	59.9	40.1		25.6	1.7	72.7		
PHF	.672	.959	.000	.909	.000	.000	.000	.000	.000	.928	.891	.984	.852	.625	.934	.916	.958

All Traffic Data

(916) 771-8700
Fax 771-8700

TRACY

File Name : TRACY-EB 205 RAMPS-F
Site Code : 00000000
Start Date : 12/6/2008
Page No : 2

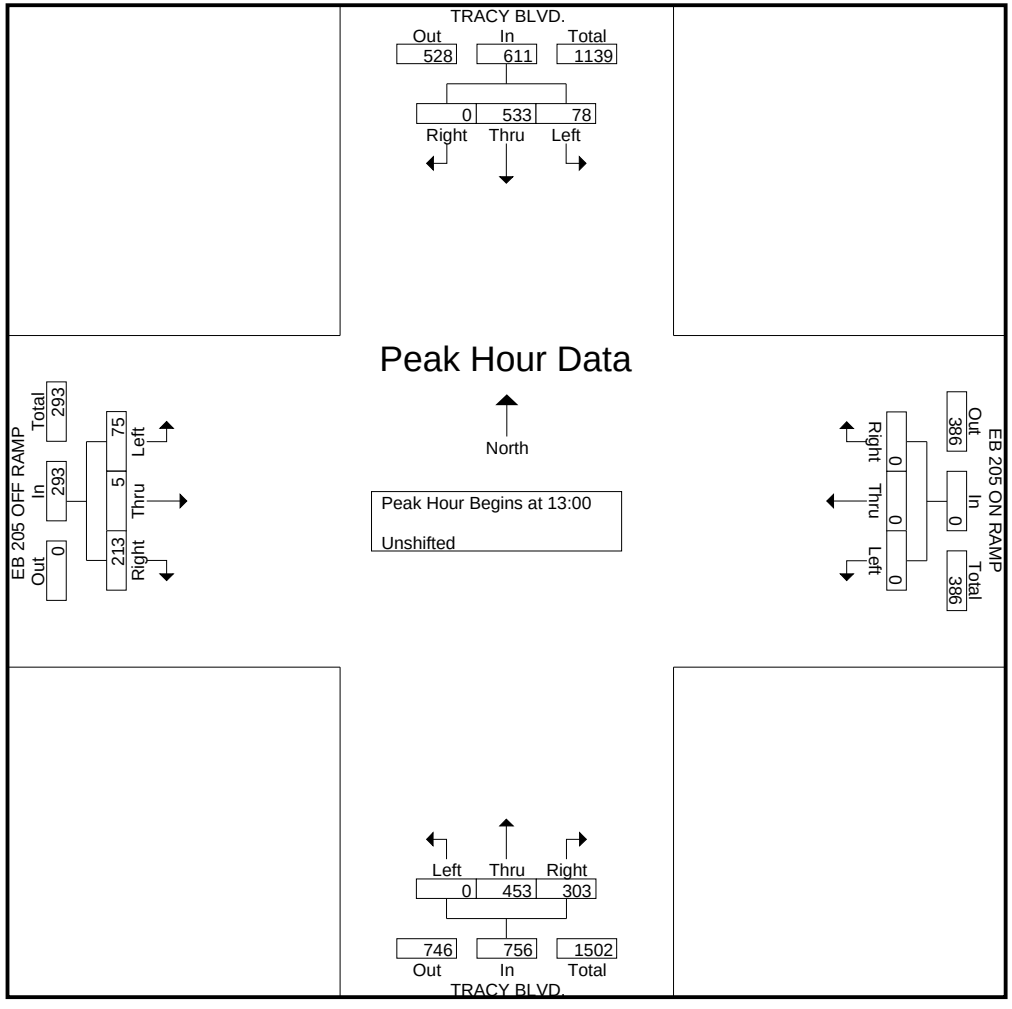

All Traffic Data

(916) 771-8700
Fax 771-8700

TRACY

File Name : TRACY-GRANT LINE-F
Site Code : 00000000
Start Date : 12/6/2008
Page No : 1

Groups Printed- Unshifted

	TRACY BLVD. Southbound				GRANT LINE RD. Westbound				TRACY BLVD. Northbound				GRANT LINE RD. Eastbound				
Start Time	Left	Thru	Right	App. Total	Left	Thru	Right	App. Total	Left	Thru	Right	App. Total	Left	Thru	Right	App. Total	Int. Total
13:00	42	149	33	224	34	82	45	161	53	118	20	191	63	66	35	164	740
13:15	38	119	40	197	20	83	38	141	61	138	22	221	44	72	41	157	716
13:30	38	122	36	196	31	94	29	154	65	142	22	229	65	60	37	162	741
13:45	43	115	39	197	34	97	37	168	61	123	17	201	79	70	44	193	759
Total	161	505	148	814	119	356	149	624	240	521	81	842	251	268	157	676	2956
14:00	41	122	38	201	31	85	35	151	52	125	18	195	52	96	41	189	736
14:15	39	137	39	215	30	90	24	144	58	137	22	217	53	94	48	195	771
14:30	35	134	39	208	31	91	39	161	61	110	22	193	59	97	50	206	768
14:45	39	146	32	217	33	78	32	143	52	113	28	193	58	89	49	196	749
Total	154	539	148	841	125	344	130	599	223	485	90	798	222	376	188	786	3024
15:00	36	128	33	197	32	70	37	139	52	140	34	226	61	99	33	193	755
15:15	41	143	37	221	29	68	33	130	53	104	23	180	48	102	38	188	719
15:30	38	150	42	230	29	72	34	135	52	108	25	185	46	90	37	173	723
15:45	49	149	39	237	34	80	30	144	57	144	22	223	48	91	36	175	779
Total	164	570	151	885	124	290	134	548	214	496	104	814	203	382	144	729	2976
16:00	54	128	41	223	35	73	26	134	53	121	21	195	47	102	43	192	744
16:15	47	138	37	222	29	85	32	146	59	100	32	191	48	123	37	208	767
16:30	70	127	40	237	22	64	37	123	52	93	17	162	58	132	42	232	754
16:45	64	133	34	231	36	85	40	161	49	119	19	187	69	160	34	263	842
Total	235	526	152	913	122	307	135	564	213	433	89	735	222	517	156	895	3107
Grand Total	714	2140	599	3453	490	1297	548	2335	890	1935	364	3189	898	1543	645	3086	12063
Apprch %	20.7	62	17.3		21	55.5	23.5		27.9	60.7	11.4		29.1	50	20.9		
Total %	5.9	17.7	5	28.6	4.1	10.8	4.5	19.4	7.4	16	3	26.4	7.4	12.8	5.3	25.6	

	TRACY BLVD. Southbound				GRANT LINE RD. Westbound				TRACY BLVD. Northbound				GRANT LINE RD. Eastbound				
Start Time	Left	Thru	Right	App. Total	Left	Thru	Right	App. Total	Left	Thru	Right	App. Total	Left	Thru	Right	App. Total	Int. Total
Peak Hour Analysis From 13:00 to 16:45 - Peak 1 of 1																	
Peak Hour for Entire Intersection Begins at 16:00																	
16:00	54	128	**41**	223	35	73	26	134	53	**121**	21	**195**	47	102	**43**	192	744
16:15	47	**138**	37	222	29	**85**	32	146	**59**	100	**32**	191	48	123	37	208	767
16:30	**70**	127	40	**237**	22	64	37	123	52	93	17	162	58	132	42	232	754
16:45	64	133	34	231	**36**	85	**40**	**161**	49	119	19	187	**69**	**160**	34	**263**	**842**
Total Volume	235	526	152	913	122	307	135	564	213	433	89	735	222	517	156	895	3107
% App. Total	25.7	57.6	16.6		21.6	54.4	23.9		29	58.9	12.1		24.8	57.8	17.4		
PHF	.839	.953	.927	.963	.847	.903	.844	.876	.903	.895	.695	.942	.804	.808	.907	.851	.923

All Traffic Data

(916) 771-8700
Fax 771-8700

TRACY

File Name : TRACY-GRANT LINE-F
Site Code : 00000000
Start Date : 12/6/2008
Page No : 2

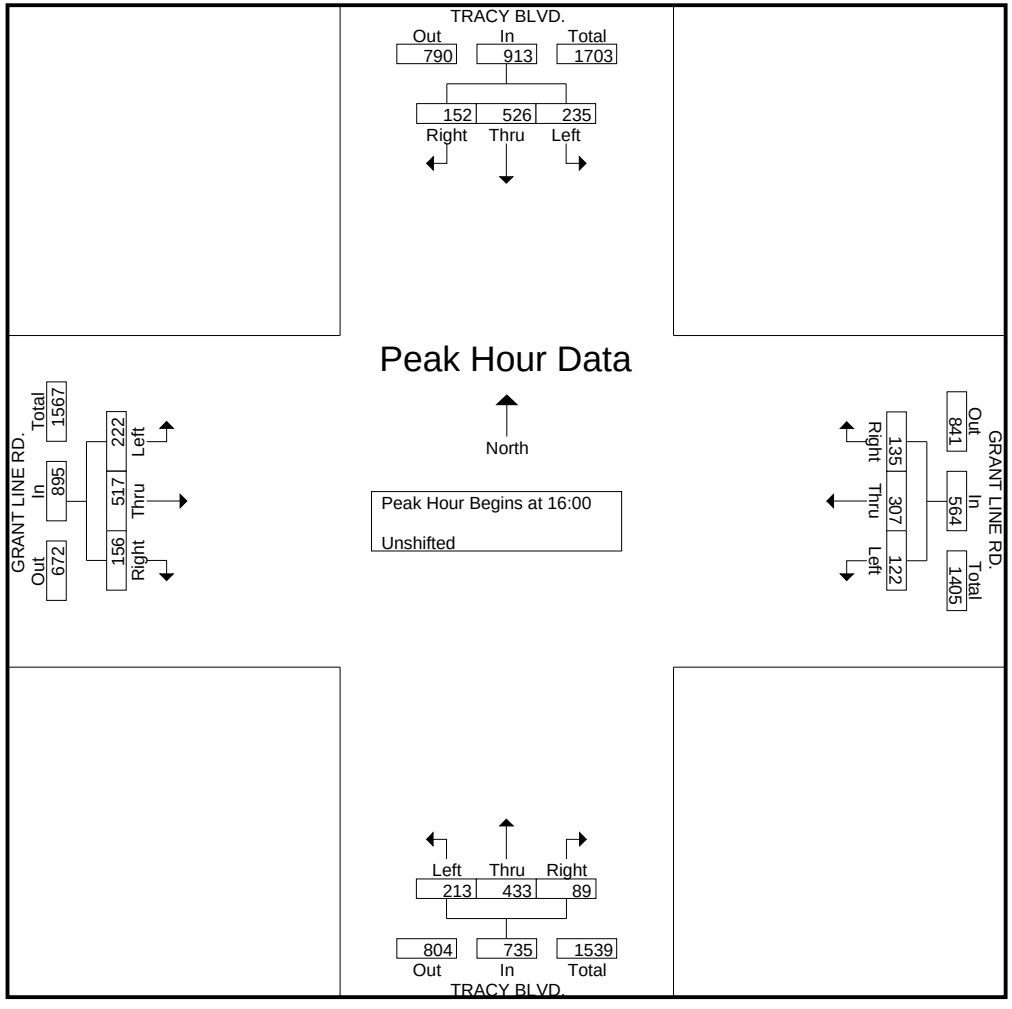

All Traffic Data

(916) 771-8700
Fax 771-8700

TRACY

File Name : HOLLY-LARCH-F
Site Code : 00000000
Start Date : 12/6/2008
Page No : 1

Groups Printed- Unshifted

	HOLLY DR. Southbound				LARCH DR. Westbound				HOLLY DR. Northbound				LARCH DR. Eastbound				
Start Time	Left	Thru	Right	App. Total	Left	Thru	Right	App. Total	Left	Thru	Right	App. Total	Left	Thru	Right	App. Total	Int. Total
13:00	0	7	2	9	2	2	1	5	16	7	4	27	12	0	13	25	66
13:15	0	7	10	17	0	1	0	1	8	7	1	16	9	0	17	26	60
13:30	1	8	6	15	1	0	1	2	10	5	1	16	13	3	15	31	64
13:45	0	9	5	14	1	4	0	5	8	10	1	19	10	1	14	25	63
Total	1	31	23	55	4	7	2	13	42	29	7	78	44	4	59	107	253
14:00	0	3	4	7	1	1	0	2	9	5	1	15	8	2	13	23	47
14:15	0	11	4	15	0	2	1	3	13	9	2	24	5	1	12	18	60
14:30	1	5	5	11	2	1	0	3	11	5	0	16	8	1	15	24	54
14:45	0	7	1	8	2	0	0	2	6	2	0	8	5	0	19	24	42
Total	1	26	14	41	5	4	1	10	39	21	3	63	26	4	59	89	203
15:00	0	9	7	16	0	1	0	1	7	8	0	15	9	0	11	20	52
15:15	1	13	7	21	0	1	0	1	11	6	1	18	6	3	13	22	62
15:30	0	9	4	13	1	0	0	1	14	4	1	19	9	0	13	22	55
15:45	1	6	3	10	0	1	1	2	8	7	0	15	10	2	10	22	49
Total	2	37	21	60	1	3	1	5	40	25	2	67	34	5	47	86	218
16:00	2	9	4	15	1	2	0	3	6	6	1	13	7	1	14	22	53
16:15	0	8	7	15	0	2	0	2	5	9	0	14	9	0	10	19	50
16:30	0	13	4	17	1	1	1	3	5	4	0	9	11	1	12	24	53
16:45	0	8	9	17	2	0	0	2	6	9	2	17	9	2	12	23	59
Total	2	38	24	64	4	5	1	10	22	28	3	53	36	4	48	88	215
Grand Total	6	132	82	220	14	19	5	38	143	103	15	261	140	17	213	370	889
Apprch %	2.7	60	37.3		36.8	50	13.2		54.8	39.5	5.7		37.8	4.6	57.6		
Total %	0.7	14.8	9.2	24.7	1.6	2.1	0.6	4.3	16.1	11.6	1.7	29.4	15.7	1.9	24	41.6	

	HOLLY DR. Southbound				LARCH DR. Westbound				HOLLY DR. Northbound				LARCH DR. Eastbound				
Start Time	Left	Thru	Right	App. Total	Left	Thru	Right	App. Total	Left	Thru	Right	App. Total	Left	Thru	Right	App. Total	Int. Total
Peak Hour Analysis From 13:00 to 16:45 - Peak 1 of 1																	
Peak Hour for Entire Intersection Begins at 13:00																	
13:00	0	7	2	9	**2**	2	**1**	**5**	**16**	7	**4**	**27**	12	0	13	25	**66**
13:15	0	7	**10**	**17**	0	1	0	1	8	7	1	16	9	0	**17**	26	60
13:30	**1**	8	6	15	1	0	1	2	10	5	1	16	**13**	**3**	15	**31**	64
13:45	0	**9**	5	14	1	**4**	0	5	8	**10**	1	19	10	1	14	25	63
Total Volume	1	31	23	55	4	7	2	13	42	29	7	78	44	4	59	107	253
% App. Total	1.8	56.4	41.8		30.8	53.8	15.4		53.8	37.2	9		41.1	3.7	55.1		
PHF	.250	.861	.575	.809	.500	.438	.500	.650	.656	.725	.438	.722	.846	.333	.868	.863	.958

All Traffic Data

(916) 771-8700
Fax 771-8700

TRACY

File Name : HOLLY-LARCH-F
Site Code : 00000000
Start Date : 12/6/2008
Page No : 2

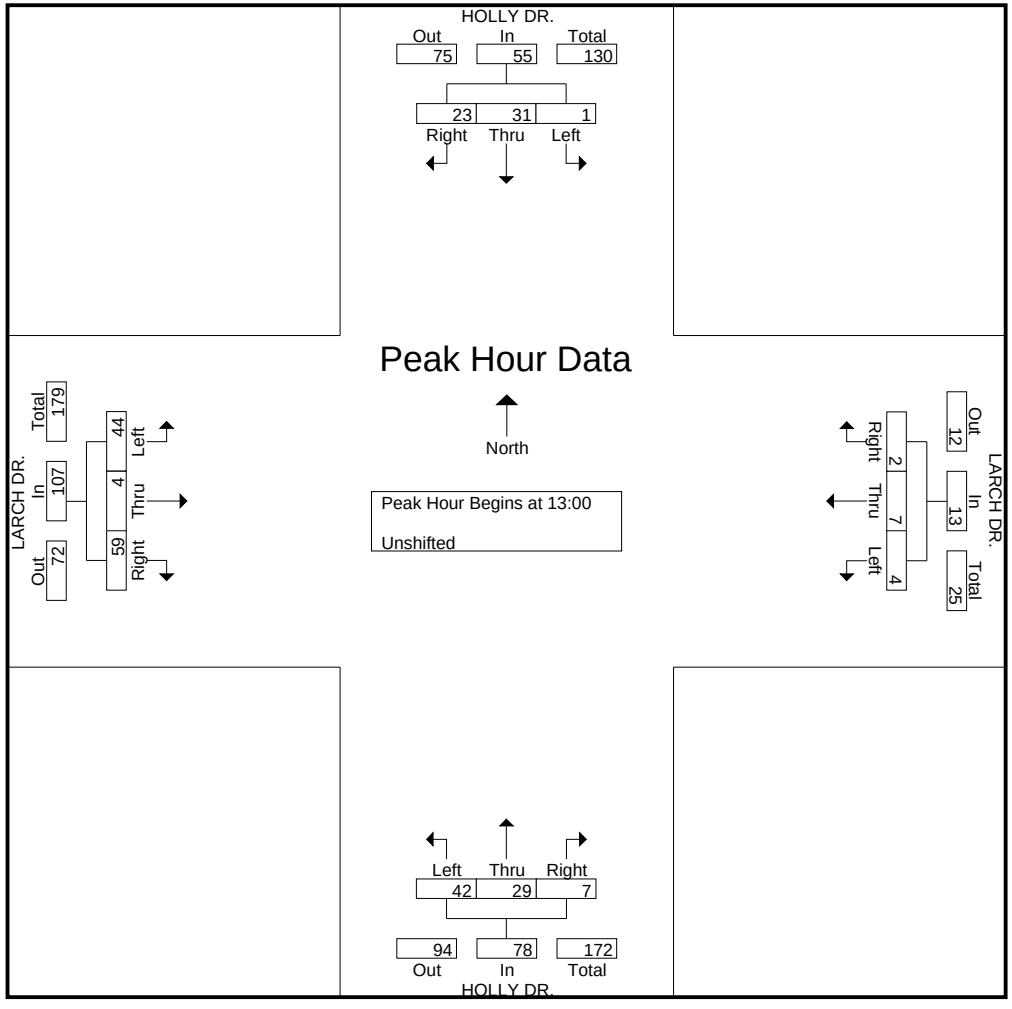

All Traffic Data

(916) 771-8700
Fax 771-8700

TRACY

File Name : HOLLY-GRANT LINE-F
Site Code : 00000000
Start Date : 12/6/2008
Page No : 1

Groups Printed- Unshifted

	HOLLY DR. Southbound				GRANT LINE RD. Westbound				HOLLY DR. Northbound				GRANT LINE RD. Eastbound				
Start Time	Left	Thru	Right	App. Total	Left	Thru	Right	App. Total	Left	Thru	Right	App. Total	Left	Thru	Right	App. Total	Int. Total
13:00	16	29	18	63	13	84	12	109	22	30	7	59	17	88	23	128	359
13:15	13	31	20	64	7	95	10	112	28	27	12	67	20	66	23	109	352
13:30	14	31	20	65	8	98	9	115	20	15	10	45	10	89	19	118	343
13:45	13	22	21	56	6	100	11	117	27	23	8	58	19	99	30	148	379
Total	56	113	79	248	34	377	42	453	97	95	37	229	66	342	95	503	1433
14:00	14	26	15	55	14	104	11	129	22	18	13	53	24	102	29	155	392
14:15	22	15	17	54	5	88	9	102	19	20	15	54	14	98	37	149	359
14:30	15	29	19	63	7	96	9	112	24	22	20	66	14	99	26	139	380
14:45	15	25	19	59	9	97	6	112	23	23	7	53	17	108	18	143	367
Total	66	95	70	231	35	385	35	455	88	83	55	226	69	407	110	586	1498
15:00	16	23	16	55	9	93	13	115	20	17	6	43	28	112	15	155	368
15:15	15	31	19	65	7	98	19	124	21	12	6	39	19	87	26	132	360
15:30	19	25	15	59	8	95	4	107	17	21	5	43	13	87	17	117	326
15:45	21	31	15	67	9	91	15	115	19	24	7	50	14	96	23	133	365
Total	71	110	65	246	33	377	51	461	77	74	24	175	74	382	81	537	1419
16:00	23	29	17	69	10	96	16	122	22	13	8	43	9	146	33	188	422
16:15	20	33	19	72	8	106	7	121	19	20	8	47	17	165	30	212	452
16:30	21	31	15	67	20	91	4	115	12	28	10	50	9	167	17	193	425
16:45	19	29	15	63	9	121	13	143	21	26	28	75	9	217	22	248	529
Total	83	122	66	271	47	414	40	501	74	87	54	215	44	695	102	841	1828
Grand Total	276	440	280	996	149	1553	168	1870	336	339	170	845	253	1826	388	2467	6178
Apprch %	27.7	44.2	28.1		8	83	9		39.8	40.1	20.1		10.3	74	15.7		
Total %	4.5	7.1	4.5	16.1	2.4	25.1	2.7	30.3	5.4	5.5	2.8	13.7	4.1	29.6	6.3	39.9	

	HOLLY DR. Southbound				GRANT LINE RD. Westbound				HOLLY DR. Northbound				GRANT LINE RD. Eastbound				
Start Time	Left	Thru	Right	App. Total	Left	Thru	Right	App. Total	Left	Thru	Right	App. Total	Left	Thru	Right	App. Total	Int. Total
Peak Hour Analysis From 13:00 to 16:45 - Peak 1 of 1																	
Peak Hour for Entire Intersection Begins at 16:00																	
16:00	**23**	29	17	69	10	96	**16**	122	**22**	13	8	43	9	146	**33**	188	422
16:15	20	**33**	**19**	**72**	8	106	7	121	19	20	8	47	**17**	165	30	212	452
16:30	21	31	15	67	**20**	91	4	115	12	**28**	10	50	9	167	17	193	425
16:45	19	29	15	63	9	**121**	13	**143**	21	26	**28**	**75**	9	**217**	22	**248**	**529**
Total Volume	83	122	66	271	47	414	40	501	74	87	54	215	44	695	102	841	1828
% App. Total	30.6	45	24.4		9.4	82.6	8		34.4	40.5	25.1		5.2	82.6	12.1		
PHF	.902	.924	.868	.941	.588	.855	.625	.876	.841	.777	.482	.717	.647	.801	.773	.848	.864

All Traffic Data

(916) 771-8700
Fax 771-8700

TRACY

File Name : HOLLY-GRANT LINE-F
Site Code : 00000000
Start Date : 12/6/2008
Page No : 2

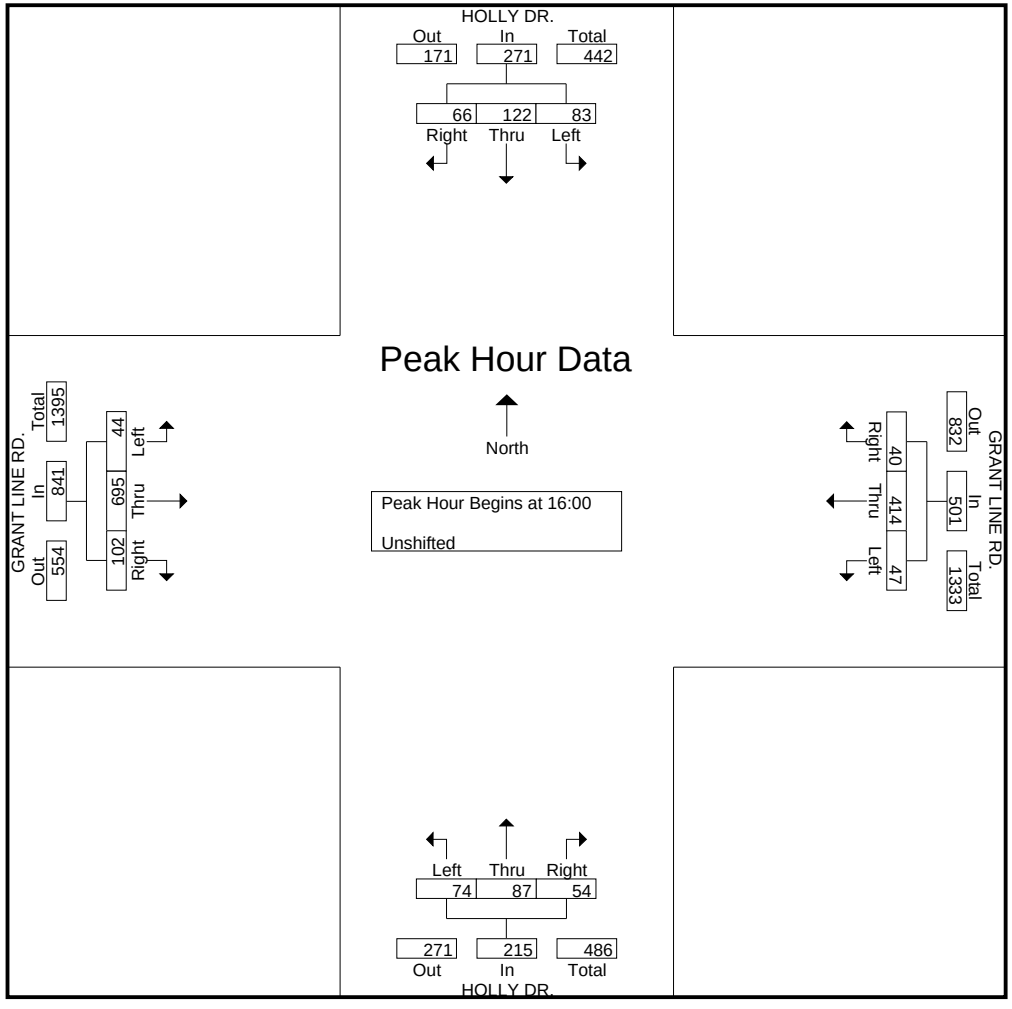

All Traffic Data

(916) 771-8700
Fax 786-2879

TRACY

File Name : 09-7093-001 CORRAL-11TH-F
Site Code : 00000000
Start Date : 21/02/2009
Page No : 1

Groups Printed- Unshifted

	CORRAL HOLLOW RD. Southbound				11TH ST. Westbound				CORRAL HOLLOW RD. Northbound				11TH ST. Eastbound				
Start Time	Left	Thru	Right	App. Total	Left	Thru	Right	App. Total	Left	Thru	Right	App. Total	Left	Thru	Right	App. Total	Int. Total
13:00	105	230	23	358	67	106	67	240	99	217	35	351	107	137	55	299	1248
13:15	79	223	37	339	42	105	69	216	102	240	36	378	98	133	60	291	1224
13:30	85	236	39	360	42	111	79	232	156	220	44	420	102	138	84	324	1336
13:45	69	232	25	326	46	107	81	234	166	260	33	459	120	130	85	335	1354
Total	338	921	124	1383	197	429	296	922	523	937	148	1608	427	538	284	1249	5162
14:00	74	206	36	316	50	116	67	233	111	208	50	369	81	129	83	293	1211
14:15	72	188	29	289	40	123	71	234	106	211	44	361	126	127	79	332	1216
14:30	88	193	32	313	57	108	78	243	156	222	31	409	92	127	68	287	1252
14:45	69	193	30	292	63	128	75	266	111	187	21	319	98	147	70	315	1192
Total	303	780	127	1210	210	475	291	976	484	828	146	1458	397	530	300	1227	4871
15:00	73	215	27	315	76	89	59	224	159	217	28	404	84	122	91	297	1240
15:15	67	203	29	299	47	126	80	253	141	237	29	407	94	127	84	305	1264
15:30	78	219	21	318	63	126	78	267	146	231	26	403	101	125	75	301	1289
15:45	63	238	46	347	69	123	74	266	149	235	18	402	109	150	67	326	1341
Total	281	875	123	1279	255	464	291	1010	595	920	101	1616	388	524	317	1229	5134
16:00	78	235	42	355	69	119	86	274	133	246	26	405	106	142	77	325	1359
16:15	73	217	36	326	49	106	81	236	143	247	29	419	87	146	75	308	1289
16:30	72	181	30	283	50	110	84	244	122	214	45	381	85	124	81	290	1198
16:45	72	197	38	307	64	116	82	262	90	207	38	335	91	121	68	280	1184
Total	295	830	146	1271	232	451	333	1016	488	914	138	1540	369	533	301	1203	5030
Grand Total	1217	3406	520	5143	894	1819	1211	3924	2090	3599	533	6222	1581	2125	1202	4908	20197
Apprch %	23.7	66.2	10.1		22.8	46.4	30.9		33.6	57.8	8.6		32.2	43.3	24.5		
Total %	6	16.9	2.6	25.5	4.4	9	6	19.4	10.3	17.8	2.6	30.8	7.8	10.5	6	24.3	

	CORRAL HOLLOW RD. Southbound				11TH ST. Westbound				CORRAL HOLLOW RD. Northbound				11TH ST. Eastbound				
Start Time	Left	Thru	Right	App. Total	Left	Thru	Right	App. Total	Left	Thru	Right	App. Total	Left	Thru	Right	App. Total	Int. Total
Peak Hour Analysis From 13:00 to 16:45 - Peak 1 of 1																	
Peak Hour for Entire Intersection Begins at 15:30																	
15:30	**78**	219	21	318	63	**126**	78	267	146	231	26	403	101	125	75	301	1289
15:45	63	**238**	**46**	347	**69**	123	74	266	**149**	235	18	402	**109**	**150**	67	**326**	1341
16:00	78	235	42	**355**	69	119	**86**	**274**	133	246	26	405	106	142	**77**	325	**1359**
16:15	73	217	36	326	49	106	81	236	143	**247**	**29**	**419**	87	146	75	308	1289
Total Volume	292	909	145	1346	250	474	319	1043	571	959	99	1629	403	563	294	1260	5278
% App. Total	21.7	67.5	10.8		24	45.4	30.6		35.1	58.9	6.1		32	44.7	23.3		
PHF	.936	.955	.788	.948	.906	.940	.927	.952	.958	.971	.853	.972	.924	.938	.955	.966	.971

All Traffic Data

(916) 771-8700
Fax 786-2879

TRACY

File Name : 09-7093-001 CORRAL-11TH-F
Site Code : 00000000
Start Date : 21/02/2009
Page No : 2

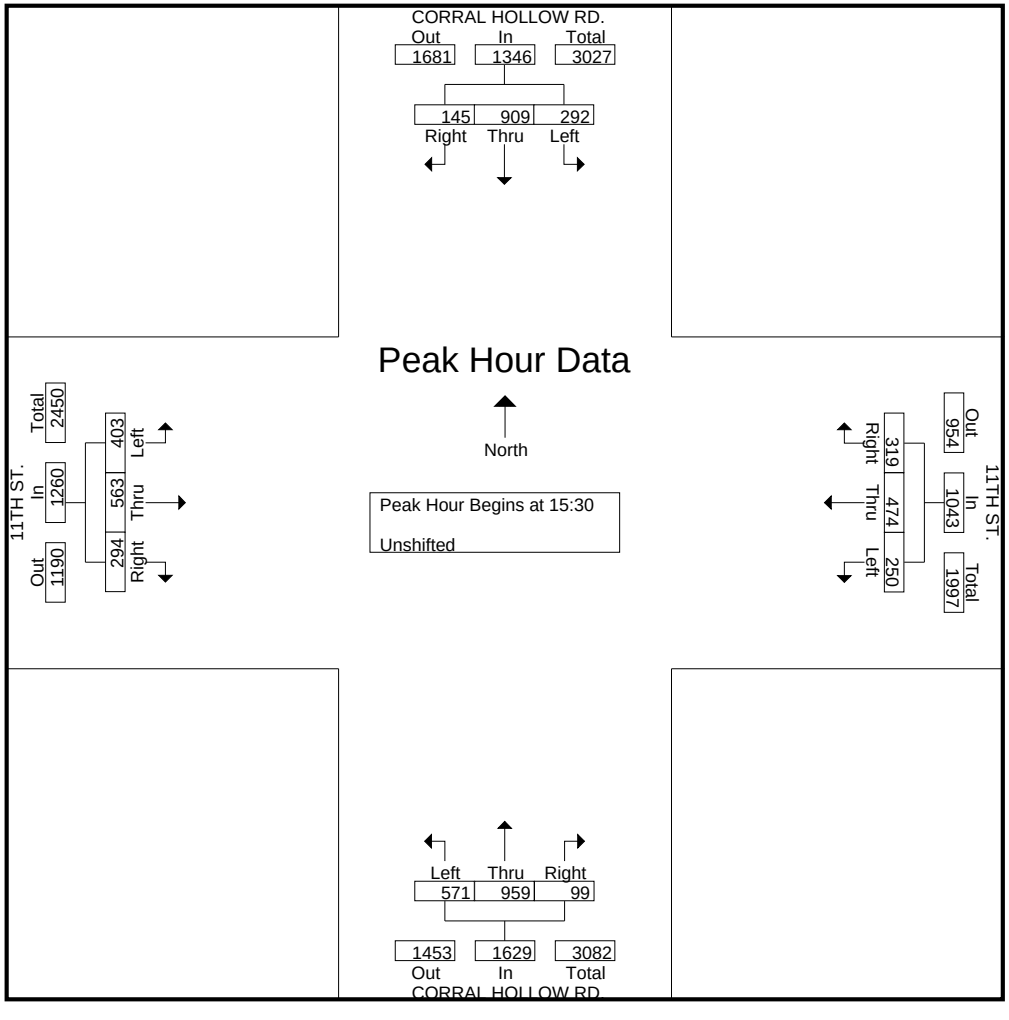

All Traffic Data

(916) 771-8700
Fax 786-2879

TRACY

File Name : 09-7093-002 TRACY-11TH-F
Site Code : 00000000
Start Date : 21/02/2009
Page No : 1

Groups Printed- Unshifted

	TRACY BLVD. Southbound				11TH ST. Westbound				TRACY BLVD. Northbound				11TH ST. Eastbound				
Start Time	Left	Thru	Right	App. Total	Left	Thru	Right	App. Total	Left	Thru	Right	App. Total	Left	Thru	Right	App. Total	Int. Total
13:00	27	93	39	159	33	130	40	203	67	115	28	210	68	143	53	264	836
13:15	28	123	38	189	24	135	40	199	71	121	30	222	48	141	75	264	874
13:30	23	105	45	173	27	141	42	210	54	109	27	190	50	129	65	244	817
13:45	34	94	38	166	20	141	38	199	76	102	24	202	50	128	71	249	816
Total	112	415	160	687	104	547	160	811	268	447	109	824	216	541	264	1021	3343
14:00	24	87	42	153	30	121	42	193	60	119	17	196	63	140	57	260	802
14:15	28	101	41	170	36	131	42	209	73	111	33	217	58	138	58	254	850
14:30	30	132	39	201	37	122	31	190	74	98	18	190	38	116	77	231	812
14:45	32	127	37	196	32	125	33	190	71	106	22	199	49	124	60	233	818
Total	114	447	159	720	135	499	148	782	278	434	90	802	208	518	252	978	3282
15:00	27	127	38	192	27	127	30	184	63	106	23	192	52	117	65	234	802
15:15	37	108	45	190	27	123	29	179	70	96	24	190	41	126	66	233	792
15:30	25	109	34	168	30	127	34	191	65	95	27	187	44	139	69	252	798
15:45	25	101	39	165	26	134	32	192	59	96	22	177	23	140	64	227	761
Total	114	445	156	715	110	511	125	746	257	393	96	746	160	522	264	946	3153
16:00	30	106	35	171	39	132	24	195	90	91	15	196	52	133	65	250	812
16:15	27	80	37	144	26	114	38	178	68	82	25	175	56	120	64	240	737
16:30	25	86	36	147	26	128	36	190	69	94	27	190	53	127	67	247	774
16:45	28	98	34	160	19	107	32	158	72	93	21	186	54	121	61	236	740
Total	110	370	142	622	110	481	130	721	299	360	88	747	215	501	257	973	3063
Grand Total	450	1677	617	2744	459	2038	563	3060	1102	1634	383	3119	799	2082	1037	3918	12841
Apprch %	16.4	61.1	22.5		15	66.6	18.4		35.3	52.4	12.3		20.4	53.1	26.5		
Total %	3.5	13.1	4.8	21.4	3.6	15.9	4.4	23.8	8.6	12.7	3	24.3	6.2	16.2	8.1	30.5	

	TRACY BLVD. Southbound				11TH ST. Westbound				TRACY BLVD. Northbound				11TH ST. Eastbound				
Start Time	Left	Thru	Right	App. Total	Left	Thru	Right	App. Total	Left	Thru	Right	App. Total	Left	Thru	Right	App. Total	Int. Total
Peak Hour Analysis From 13:00 to 16:45 - Peak 1 of 1																	
Peak Hour for Entire Intersection Begins at 13:00																	
13:00	27	93	39	159	**33**	130	40	203	67	115	28	210	**68**	**143**	53	**264**	836
13:15	28	**123**	38	**189**	24	135	40	199	71	**121**	**30**	**222**	48	141	**75**	264	**874**
13:30	23	105	**45**	173	27	**141**	**42**	**210**	54	109	27	190	50	129	65	244	817
13:45	**34**	94	38	166	20	141	38	199	**76**	102	24	202	50	128	71	249	816
Total Volume	112	415	160	687	104	547	160	811	268	447	109	824	216	541	264	1021	3343
% App. Total	16.3	60.4	23.3		12.8	67.4	19.7		32.5	54.2	13.2		21.2	53	25.9		
PHF	.824	.843	.889	.909	.788	.970	.952	.965	.882	.924	.908	.928	.794	.946	.880	.967	.956

All Traffic Data

(916) 771-8700
Fax 786-2879

TRACY

File Name : 09-7093-002 TRACY-11TH-F
Site Code : 00000000
Start Date : 21/02/2009
Page No : 2

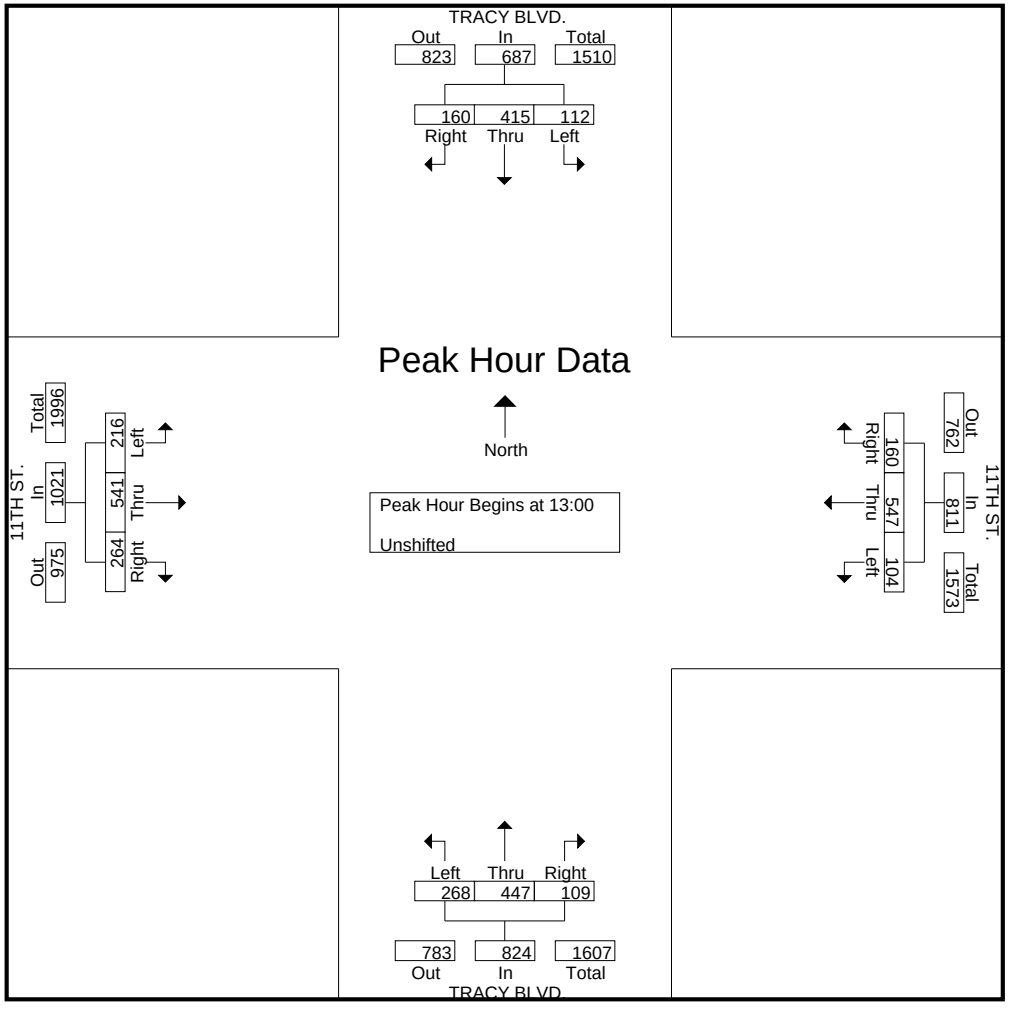

All Traffic Data

(916) 771-8700
Fax 786-2879

TRACY

File Name : 09-7093-003 HOLLY-11TH-F
Site Code : 00000000
Start Date : 21/02/2009
Page No : 1

Groups Printed- Unshifted

	HOLLY DR. Southbound				11TH ST. Westbound				HOLLY DR. Northbound				11TH ST. Eastbound				
Start Time	Left	Thru	Right	App. Total	Left	Thru	Right	App. Total	Left	Thru	Right	App. Total	Left	Thru	Right	App. Total	Int. Total
13:00	8	31	23	62	21	123	9	153	28	26	10	64	26	126	34	186	465
13:15	7	30	28	65	15	128	10	153	29	34	10	73	22	145	34	201	492
13:30	11	30	20	61	15	127	13	155	25	32	12	69	23	121	28	172	457
13:45	15	23	25	63	23	132	12	167	29	32	16	77	16	122	27	165	472
Total	41	114	96	251	74	510	44	628	111	124	48	283	87	514	123	724	1886
14:00	13	31	17	61	19	128	9	156	31	22	19	72	19	110	33	162	451
14:15	4	47	20	71	22	113	3	138	31	38	5	74	13	123	40	176	459
14:30	11	35	14	60	11	120	11	142	25	31	16	72	17	109	29	155	429
14:45	6	25	15	46	12	124	10	146	30	24	12	66	16	107	33	156	414
Total	34	138	66	238	64	485	33	582	117	115	52	284	65	449	135	649	1753
15:00	6	37	19	62	22	121	9	152	32	33	15	80	17	103	26	146	440
15:15	7	31	14	52	16	128	10	154	26	24	10	60	14	122	28	164	430
15:30	16	34	21	71	14	121	14	149	27	29	11	67	13	133	20	166	453
15:45	31	25	21	77	14	125	12	151	25	30	8	63	13	131	20	164	455
Total	60	127	75	262	66	495	45	606	110	116	44	270	57	489	94	640	1778
16:00	18	29	23	70	12	133	15	160	24	25	8	57	16	121	23	160	447
16:15	16	29	18	63	14	130	14	158	22	27	5	54	10	124	27	161	436
16:30	10	28	15	53	15	132	15	162	16	27	12	55	12	130	22	164	434
16:45	15	28	22	65	10	121	12	143	20	30	2	52	14	118	27	159	419
Total	59	114	78	251	51	516	56	623	82	109	27	218	52	493	99	644	1736
Grand Total	194	493	315	1002	255	2006	178	2439	420	464	171	1055	261	1945	451	2657	7153
Apprch %	19.4	49.2	31.4		10.5	82.2	7.3		39.8	44	16.2		9.8	73.2	17		
Total %	2.7	6.9	4.4	14	3.6	28	2.5	34.1	5.9	6.5	2.4	14.7	3.6	27.2	6.3	37.1	

	HOLLY DR. Southbound				11TH ST. Westbound				HOLLY DR. Northbound				11TH ST. Eastbound				
Start Time	Left	Thru	Right	App. Total	Left	Thru	Right	App. Total	Left	Thru	Right	App. Total	Left	Thru	Right	App. Total	Int. Total
Peak Hour Analysis From 13:00 to 16:45 - Peak 1 of 1																	
Peak Hour for Entire Intersection Begins at 13:00																	
13:00	8	**31**	23	62	21	123	9	153	28	26	10	64	**26**	126	**34**	186	465
13:15	7	30	**28**	**65**	15	128	10	153	**29**	**34**	10	73	22	**145**	34	**201**	**492**
13:30	11	30	20	61	15	127	**13**	155	25	32	12	69	23	121	28	172	457
13:45	**15**	23	25	63	**23**	**132**	12	**167**	29	32	**16**	**77**	16	122	27	165	472
Total Volume	41	114	96	251	74	510	44	628	111	124	48	283	87	514	123	724	1886
% App. Total	16.3	45.4	38.2		11.8	81.2	7		39.2	43.8	17		12	71	17		
PHF	.683	.919	.857	.965	.804	.966	.846	.940	.957	.912	.750	.919	.837	.886	.904	.900	.958

All Traffic Data

(916) 771-8700
Fax 786-2879

TRACY

File Name : 09-7093-003 HOLLY-11TH-F
Site Code : 00000000
Start Date : 21/02/2009
Page No : 2

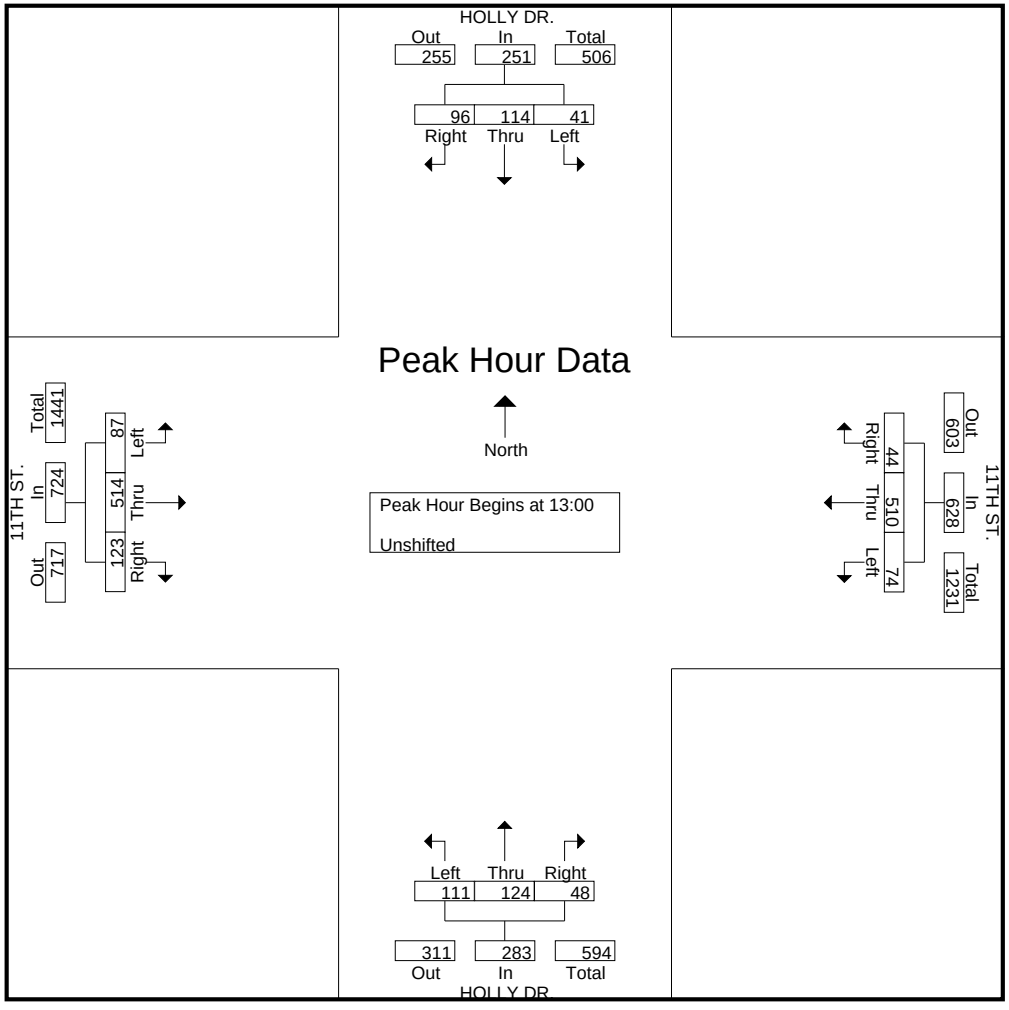

APPENDIX B:
SYNCHRO CALCULATION WORKSHEETS

Movement	EBL	EBT	EBR	WBL	WBT	WBR	NBL	NBT	NBR	SBL	SBT	SBR
Lane Configurations												
Volume (veh/h)	13	59	77	60	29	39	34	75	84	8	31	6
Sign Control		Stop			Stop			Free			Free	
Grade		0%			0%			0%			0%	
Peak Hour Factor	0.82	0.82	0.82	0.82	0.82	0.82	0.82	0.82	0.82	0.82	0.82	0.82
Hourly flow rate (vph)	16	72	94	73	35	48	41	91	102	10	38	7
Pedestrians												
Lane Width (ft)												
Walking Speed (ft/s)												
Percent Blockage												
Right turn flare (veh)												
Median type								None			None	
Median storage veh)												
Upstream signal (ft)												
pX, platoon unblocked												
vC, conflicting volume	352	338	41	416	290	143	45			194		
vC1, stage 1 conf vol												
vC2, stage 2 conf vol												
vCu, unblocked vol	352	338	41	416	290	143	45			194		
tC, single (s)	7.1	6.5	6.2	7.1	6.5	6.2	4.1			4.1		
tC, 2 stage (s)												
tF (s)	3.5	4.0	3.3	3.5	4.0	3.3	2.2			2.2		
p0 queue free %	97	87	91	83	94	95	97			99		
cM capacity (veh/h)	535	567	1035	440	603	910	1563			1379		

Direction, Lane #	EB 1	WB 1	NB 1	SB 1
Volume Total	182	156	235	55
Volume Left	16	73	41	10
Volume Right	94	48	102	7
cSH	735	563	1563	1379
Volume to Capacity	0.25	0.28	0.03	0.01
Queue Length 95th (ft)	24	28	2	1
Control Delay (s)	11.5	13.8	1.5	1.4
Lane LOS	B	B	A	A
Approach Delay (s)	11.5	13.8	1.5	1.4
Approach LOS	B	B		

Intersection Summary			
Average Delay	7.4		
Intersection Capacity Utilization	40.4%	ICU Level of Service	A
Analysis Period (min)	15		

Movement	EBL	EBR	NBL	NBT	SBT	SBR
Lane Configurations						
Volume (vph)	48	430	375	159	114	46
Ideal Flow (vphpl)	1900	1900	1900	1900	1900	1900
Total Lost time (s)	4.0	4.0	4.0	4.0	4.0	
Lane Util. Factor	1.00	1.00	1.00	1.00	1.00	
Frt	1.00	0.85	1.00	1.00	0.96	
Flt Protected	0.95	1.00	0.95	1.00	1.00	
Satd. Flow (prot)	1787	1599	1805	1900	1808	
Flt Permitted	0.95	1.00	0.95	1.00	1.00	
Satd. Flow (perm)	1787	1599	1805	1900	1808	
Peak-hour factor, PHF	0.96	0.96	0.96	0.96	0.96	0.96
Adj. Flow (vph)	50	448	391	166	119	48
RTOR Reduction (vph)	0	364	0	0	26	0
Lane Group Flow (vph)	50	84	391	166	141	0
Heavy Vehicles (%)	1%	1%	0%	0%	1%	1%
Turn Type		Perm	Prot			
Protected Phases	2		3	8	4	
Permitted Phases		2				
Actuated Green, G (s)	8.0	8.0	15.0	26.4	6.9	
Effective Green, g (s)	8.0	8.0	15.5	26.9	7.4	
Actuated g/C Ratio	0.19	0.19	0.36	0.63	0.17	
Clearance Time (s)	4.0	4.0	4.5	4.5	4.5	
Vehicle Extension (s)	2.0	2.0	2.0	2.5	2.5	
Lane Grp Cap (vph)	333	298	652	1191	312	
v/s Ratio Prot	0.03		c0.22	0.09	c0.08	
v/s Ratio Perm		c0.05				
v/c Ratio	0.15	0.28	0.60	0.14	0.45	
Uniform Delay, d1	14.6	15.0	11.2	3.3	15.9	
Progression Factor	1.00	1.00	1.00	1.00	1.00	
Incremental Delay, d2	0.1	0.2	1.0	0.0	0.8	
Delay (s)	14.7	15.2	12.2	3.3	16.7	
Level of Service	B	B	B	A	B	
Approach Delay (s)	15.1			9.5	16.7	
Approach LOS	B			A	B	

Intersection Summary			
HCM Average Control Delay	12.8	HCM Level of Service	B
HCM Volume to Capacity ratio	0.48		
Actuated Cycle Length (s)	42.9	Sum of lost time (s)	12.0
Intersection Capacity Utilization	44.6%	ICU Level of Service	A
Analysis Period (min)	15		

c Critical Lane Group

Movement	EBL	EBT	EBR	WBL	WBT	WBR	NBL	NBT	NBR	SBL	SBT	SBR
Lane Configurations												
Volume (vph)	112	740	656	235	432	108	482	352	247	120	350	65
Ideal Flow (vphpl)	1900	1900	1900	1900	1900	1900	1900	1900	1900	1900	1900	1900
Total Lost time (s)	4.0	4.0	4.0	4.0	4.0		4.0	4.0	4.0	4.0	4.0	
Lane Util. Factor	1.00	0.95	1.00	1.00	0.95		0.94	0.95	1.00	1.00	0.95	
Frt	1.00	1.00	0.85	1.00	0.97		1.00	1.00	0.85	1.00	0.98	
Flt Protected	0.95	1.00	1.00	0.95	1.00		0.95	1.00	1.00	0.95	1.00	
Satd. Flow (prot)	1805	3610	1615	1805	3502		5090	3610	1615	1787	3490	
Flt Permitted	0.95	1.00	1.00	0.95	1.00		0.95	1.00	1.00	0.95	1.00	
Satd. Flow (perm)	1805	3610	1615	1805	3502		5090	3610	1615	1787	3490	
Peak-hour factor, PHF	0.96	0.96	0.96	0.96	0.96	0.96	0.96	0.96	0.96	0.96	0.96	0.96
Adj. Flow (vph)	117	771	683	245	450	112	502	367	257	125	365	68
RTOR Reduction (vph)	0	0	297	0	19	0	0	0	167	0	13	0
Lane Group Flow (vph)	117	771	386	245	543	0	502	367	90	125	420	0
Heavy Vehicles (%)	0%	0%	0%	0%	0%	0%	0%	0%	0%	1%	1%	1%
Turn Type	Prot		Perm	Prot			Prot		Perm	Prot		
Protected Phases	7	4		3	8		5	2		1	6	
Permitted Phases			4						2			
Actuated Green, G (s)	11.4	28.0	28.0	14.5	31.1		17.0	38.7	38.7	11.8	33.5	
Effective Green, g (s)	12.9	29.5	29.5	16.0	32.6		18.5	40.2	40.2	13.3	35.0	
Actuated g/C Ratio	0.11	0.26	0.26	0.14	0.28		0.16	0.35	0.35	0.12	0.30	
Clearance Time (s)	5.5	5.5	5.5	5.5	5.5		5.5	5.5	5.5	5.5	5.5	
Vehicle Extension (s)	2.0	3.0	3.0	2.0	3.0		2.0	3.0	3.0	2.0	3.0	
Lane Grp Cap (vph)	202	926	414	251	993		819	1262	565	207	1062	
v/s Ratio Prot	0.06	0.21		c0.14	c0.16		c0.10	0.10		0.07	c0.12	
v/s Ratio Perm			c0.24						0.06			
v/c Ratio	0.58	0.83	0.93	0.98	0.55		0.61	0.29	0.16	0.60	0.40	
Uniform Delay, d1	48.5	40.4	41.8	49.3	34.9		44.9	27.1	25.8	48.3	31.6	
Progression Factor	1.00	1.00	1.00	1.00	1.00		1.00	1.00	1.00	1.00	1.00	
Incremental Delay, d2	2.5	6.5	27.7	49.5	0.6		3.4	0.6	0.6	3.4	0.2	
Delay (s)	51.0	46.9	69.4	98.8	35.6		48.3	27.7	26.4	51.7	31.9	
Level of Service	D	D	E	F	D		D	C	C	D	C	
Approach Delay (s)		57.0			54.8			36.6			36.3	
Approach LOS		E			D			D			D	

Intersection Summary			
HCM Average Control Delay	48.0	HCM Level of Service	D
HCM Volume to Capacity ratio	0.71		
Actuated Cycle Length (s)	115.0	Sum of lost time (s)	20.0
Intersection Capacity Utilization	75.4%	ICU Level of Service	D
Analysis Period (min)	15		

c Critical Lane Group

Level Of Service Computation Report
2000 HCM 4-Way Stop Method (Future Volume Alternative)

Intersection #4 Larch Rd/Tracy Blvd

Cycle (sec):	100	Critical Vol./Cap.(X):	0.484
Loss Time (sec):	0 (Y+R=4.0 sec)	Average Delay (sec/veh):	12.3
Optimal Cycle:	0	Level Of Service:	B

Street Name:	Tracy Blvd						Larch Rd					
Approach:	North Bound			South Bound			East Bound			West Bound		
Movement:	L - T - R			L - T - R			L - T - R			L - T - R		
Control:	Stop Sign			Stop Sign			Stop Sign			Stop Sign		
Rights:	Include			Include			Include			Include		
Min. Green:	0	0	0	0	0	0	0	0	0	0	0	0
Lanes:	1 0 1	0 1		1 0	0 1	0	0 0	1! 0	0	0 1	0 0	1
Volume Module:												
Base Vol:	65	148	115	2	89	6	7	77	69	151	65	15
Growth Adj:	1.00	1.00	1.00	1.00	1.00	1.00	1.00	1.00	1.00	1.00	1.00	1.00
Initial Bse:	65	148	115	2	89	6	7	77	69	151	65	15
Added Vol:	0	0	0	0	0	0	0	0	0	0	0	0
PasserByVol:	0	0	0	0	0	0	0	0	0	0	0	0
Initial Fut:	65	148	115	2	89	6	7	77	69	151	65	15
User Adj:	1.00	1.00	1.00	1.00	1.00	1.00	1.00	1.00	1.00	1.00	1.00	1.00
PHF Adj:	0.85	0.85	0.85	0.85	0.85	0.85	0.85	0.85	0.85	0.85	0.85	0.85
PHF Volume:	76	174	135	2	105	7	8	91	81	178	76	18
Reduct Vol:	0	0	0	0	0	0	0	0	0	0	0	0
Reduced Vol:	76	174	135	2	105	7	8	91	81	178	76	18
PCE Adj:	1.00	1.00	1.00	1.00	1.00	1.00	1.00	1.00	1.00	1.00	1.00	1.00
MLF Adj:	1.00	1.00	1.00	1.00	1.00	1.00	1.00	1.00	1.00	1.00	1.00	1.00
FinalVolume:	76	174	135	2	105	7	8	91	81	178	76	18
Saturation Flow Module:												
Adjustment:	1.00	1.00	1.00	1.00	1.00	1.00	1.00	1.00	1.00	1.00	1.00	1.00
Lanes:	1.00	1.00	1.00	1.00	0.94	0.06	0.05	0.50	0.45	0.70	0.30	1.00
Final Sat.:	495	532	592	466	472	32	25	280	251	367	158	614
Capacity Analysis Module:												
Vol/Sat:	0.15	0.33	0.23	0.01	0.22	0.22	0.32	0.32	0.32	0.48	0.48	0.03
Crit Moves:	****			****			****			****		
Delay/Veh:	10.9	12.1	10.1	9.9	11.1	11.1	11.8	11.8	11.8	15.0	15.0	8.4
Delay Adj:	1.00	1.00	1.00	1.00	1.00	1.00	1.00	1.00	1.00	1.00	1.00	1.00
AdjDel/Veh:	10.9	12.1	10.1	9.9	11.1	11.1	11.8	11.8	11.8	15.0	15.0	8.4
LOS by Move:	B	B	B	A	B	B	B	B	B	B	B	A
ApproachDel:	11.2			11.1			11.8			14.5		
Delay Adj:	1.00			1.00			1.00			1.00		
ApprAdjDel:	11.2			11.1			11.8			14.5		
LOS by Appr:	B			B			B			B		
AllWayAvgQ:	0.2	0.4	0.3	0.0	0.2	0.2	0.4	0.4	0.4	0.8	0.8	0.0

Note: Queue reported is the number of cars per lane.

Movement	EBL	EBT	EBR	WBL	WBT	WBR	NBL	NBT	NBR	SBL	SBT	SBR
Lane Configurations												
Volume (vph)	0	0	0	380	4	113	127	309	0	0	309	101
Ideal Flow (vphpl)	1900	1900	1900	1900	1900	1900	1900	1900	1900	1900	1900	1900
Total Lost time (s)					4.0	4.0	4.0	4.0			4.0	
Lane Util. Factor					1.00	1.00	1.00	0.95			0.95	
Frt					1.00	0.85	1.00	1.00			0.96	
Flt Protected					0.95	1.00	0.95	1.00			1.00	
Satd. Flow (prot)					1741	1553	1736	3471			3312	
Flt Permitted					0.95	1.00	0.95	1.00			1.00	
Satd. Flow (perm)					1741	1553	1736	3471			3312	
Peak-hour factor, PHF	0.94	0.94	0.94	0.94	0.94	0.94	0.94	0.94	0.94	0.94	0.94	0.94
Adj. Flow (vph)	0	0	0	404	4	120	135	329	0	0	329	107
RTOR Reduction (vph)	0	0	0	0	0	47	0	0	0	0	32	0
Lane Group Flow (vph)	0	0	0	0	408	73	135	329	0	0	404	0
Heavy Vehicles (%)	0%	0%	0%	4%	4%	4%	4%	4%	4%	5%	5%	5%
Turn Type				Perm		Perm	Prot					
Protected Phases					8		5	2			6	
Permitted Phases				8		8						
Actuated Green, G (s)					20.2	20.2	8.7	29.6			16.9	
Effective Green, g (s)					20.2	20.2	8.7	30.5			17.8	
Actuated g/C Ratio					0.34	0.34	0.15	0.52			0.30	
Clearance Time (s)					4.0	4.0	4.0	4.9			4.9	
Vehicle Extension (s)					3.0	3.0	3.0	3.0			3.0	
Lane Grp Cap (vph)					599	534	257	1804			1004	
v/s Ratio Prot							c0.08	0.09			c0.12	
v/s Ratio Perm					0.23	0.05						
v/c Ratio					0.68	0.14	0.53	0.18			0.40	
Uniform Delay, d1					16.5	13.2	23.1	7.5			16.2	
Progression Factor					1.00	1.00	1.00	1.00			1.00	
Incremental Delay, d2					3.2	0.1	1.9	0.0			0.3	
Delay (s)					19.7	13.4	25.0	7.5			16.5	
Level of Service					B	B	C	A			B	
Approach Delay (s)		0.0			18.2			12.6			16.5	
Approach LOS		A			B			B			B	

Intersection Summary			
HCM Average Control Delay	15.9	HCM Level of Service	B
HCM Volume to Capacity ratio	0.55		
Actuated Cycle Length (s)	58.7	Sum of lost time (s)	12.0
Intersection Capacity Utilization	50.8%	ICU Level of Service	A
Analysis Period (min)	15		

c Critical Lane Group

Movement	EBL	EBT	EBR	WBL	WBT	WBR	NBL	NBT	NBR	SBL	SBT	SBR
Lane Configurations												
Volume (vph)	70	10	159	0	0	0	0	366	263	117	572	0
Ideal Flow (vphpl)	1900	1900	1900	1900	1900	1900	1900	1900	1900	1900	1900	1900
Total Lost time (s)		4.0	4.0					4.0		4.0	4.0	
Lane Util. Factor		1.00	1.00					0.95		1.00	0.95	
Frt		1.00	0.85					0.94		1.00	1.00	
Flt Protected		0.96	1.00					1.00		0.95	1.00	
Satd. Flow (prot)		1718	1524					3317		1752	3505	
Flt Permitted		0.96	1.00					1.00		0.95	1.00	
Satd. Flow (perm)		1718	1524					3317		1752	3505	
Peak-hour factor, PHF	0.95	0.95	0.95	0.95	0.95	0.95	0.95	0.95	0.95	0.95	0.95	0.95
Adj. Flow (vph)	74	11	167	0	0	0	0	385	277	123	602	0
RTOR Reduction (vph)	0	0	133	0	0	0	0	129	0	0	0	0
Lane Group Flow (vph)	0	85	34	0	0	0	0	533	0	123	602	0
Heavy Vehicles (%)	6%	6%	6%	0%	0%	0%	2%	2%	2%	3%	3%	3%
Turn Type	Perm		Perm							Prot		
Protected Phases		4						2		1	6	
Permitted Phases	4		4									
Actuated Green, G (s)		8.1	8.1					15.0		7.3	26.3	
Effective Green, g (s)		9.0	9.0					15.9		7.3	27.2	
Actuated g/C Ratio		0.20	0.20					0.36		0.17	0.62	
Clearance Time (s)		4.9	4.9					4.9		4.0	4.9	
Vehicle Extension (s)		3.0	3.0					3.0		3.0	3.0	
Lane Grp Cap (vph)		350	310					1193		289	2157	
v/s Ratio Prot								c0.16		c0.07	0.17	
v/s Ratio Perm		0.05	0.02									
v/c Ratio		0.24	0.11					0.45		0.43	0.28	
Uniform Delay, d1		14.7	14.3					10.8		16.6	3.9	
Progression Factor		1.00	1.00					1.00		1.00	1.00	
Incremental Delay, d2		0.4	0.2					0.3		1.0	0.1	
Delay (s)		15.1	14.5					11.1		17.6	4.0	
Level of Service		B	B					B		B	A	
Approach Delay (s)		14.7			0.0			11.1			6.3	
Approach LOS		B			A			B			A	

Intersection Summary			
HCM Average Control Delay	9.5	HCM Level of Service	A
HCM Volume to Capacity ratio	0.38		
Actuated Cycle Length (s)	44.2	Sum of lost time (s)	12.0
Intersection Capacity Utilization	50.8%	ICU Level of Service	A
Analysis Period (min)	15		

c Critical Lane Group

Movement	EBL	EBT	EBR	WBL	WBT	WBR	NBL	NBT	NBR	SBL	SBT	SBR
Lane Configurations												
Volume (vph)	212	573	156	134	408	138	207	468	171	157	532	161
Ideal Flow (vphpl)	1900	1900	1900	1900	1900	1900	1900	1900	1900	1900	1900	1900
Total Lost time (s)	4.0	4.0		4.0	4.0		4.0	4.0		4.0	4.0	
Lane Util. Factor	1.00	0.95		1.00	0.95		1.00	0.95		1.00	0.95	
Frt	1.00	0.97		1.00	0.96		1.00	0.96		1.00	0.97	
Flt Protected	0.95	1.00		0.95	1.00		0.95	1.00		0.95	1.00	
Satd. Flow (prot)	1805	3494		1787	3439		1787	3431		1787	3450	
Flt Permitted	0.95	1.00		0.95	1.00		0.95	1.00		0.95	1.00	
Satd. Flow (perm)	1805	3494		1787	3439		1787	3431		1787	3450	
Peak-hour factor, PHF	0.95	0.95	0.95	0.95	0.95	0.95	0.95	0.95	0.95	0.95	0.95	0.95
Adj. Flow (vph)	223	603	164	141	429	145	218	493	180	165	560	169
RTOR Reduction (vph)	0	25	0	0	35	0	0	33	0	0	26	0
Lane Group Flow (vph)	223	742	0	141	539	0	218	640	0	165	703	0
Heavy Vehicles (%)	0%	0%	0%	1%	1%	1%	1%	1%	1%	1%	1%	1%
Turn Type	Prot			Prot			Prot			Prot		
Protected Phases	5	2		1	6		3	8		7	4	
Permitted Phases												
Actuated Green, G (s)	14.7	23.0		11.0	19.3		14.6	31.2		12.3	28.9	
Effective Green, g (s)	15.2	24.0		11.5	20.3		15.1	31.7		12.8	29.4	
Actuated g/C Ratio	0.16	0.25		0.12	0.21		0.16	0.33		0.13	0.31	
Clearance Time (s)	4.5	5.0		4.5	5.0		4.5	4.5		4.5	4.5	
Vehicle Extension (s)	1.0	3.0		1.0	3.0		1.0	3.0		1.0	3.0	
Lane Grp Cap (vph)	286	874		214	727		281	1133		238	1057	
v/s Ratio Prot	c0.12	c0.21		0.08	0.16		c0.12	0.19		0.09	c0.20	
v/s Ratio Perm												
v/c Ratio	0.78	0.85		0.66	0.74		0.78	0.57		0.69	0.67	
Uniform Delay, d1	38.8	34.3		40.4	35.4		38.8	26.5		39.7	29.0	
Progression Factor	1.00	1.00		1.00	1.00		1.00	1.00		1.00	1.00	
Incremental Delay, d2	11.6	7.7		5.5	4.1		11.5	2.0		6.9	3.3	
Delay (s)	50.4	42.0		45.9	39.5		50.4	28.5		46.6	32.3	
Level of Service	D	D		D	D		D	C		D	C	
Approach Delay (s)		43.9			40.7			33.9			35.0	
Approach LOS		D			D			C			C	

Intersection Summary			
HCM Average Control Delay	38.4	HCM Level of Service	D
HCM Volume to Capacity ratio	0.76		
Actuated Cycle Length (s)	96.0	Sum of lost time (s)	16.0
Intersection Capacity Utilization	72.9%	ICU Level of Service	C
Analysis Period (min)	15		

c Critical Lane Group

Movement	EBL	EBT	EBR	WBL	WBT	WBR	NBL	NBT	NBR	SBL	SBT	SBR
Lane Configurations												
Volume (veh/h)	75	5	87	4	8	3	43	28	9	1	35	43
Sign Control		Stop			Stop			Free			Free	
Grade		0%			0%			0%			0%	
Peak Hour Factor	0.80	0.80	0.80	0.80	0.80	0.80	0.80	0.80	0.80	0.80	0.80	0.80
Hourly flow rate (vph)	94	6	109	5	10	4	54	35	11	1	44	54
Pedestrians												
Lane Width (ft)												
Walking Speed (ft/s)												
Percent Blockage												
Right turn flare (veh)												
Median type								None			None	
Median storage veh)												
Upstream signal (ft)												
pX, platoon unblocked												
vC, conflicting volume	230	227	71	333	248	41	98			46		
vC1, stage 1 conf vol												
vC2, stage 2 conf vol												
vCu, unblocked vol	230	227	71	333	248	41	98			46		
tC, single (s)	7.1	6.5	6.2	7.1	6.5	6.2	4.1			4.1		
tC, 2 stage (s)												
tF (s)	3.5	4.0	3.3	3.5	4.0	3.3	2.2			2.2		
p0 queue free %	87	99	89	99	98	100	96			100		
cM capacity (veh/h)	696	649	995	536	634	1036	1489			1568		

Direction, Lane #	EB 1	EB 2	WB 1	NB 1	SB 1
Volume Total	94	115	19	100	99
Volume Left	94	0	5	54	1
Volume Right	0	109	4	11	54
cSH	696	967	653	1489	1568
Volume to Capacity	0.13	0.12	0.03	0.04	0.00
Queue Length 95th (ft)	12	10	2	3	0
Control Delay (s)	11.0	9.2	10.7	4.2	0.1
Lane LOS	B	A	B	A	A
Approach Delay (s)	10.0		10.7	4.2	0.1
Approach LOS	B		B		

Intersection Summary			
Average Delay	6.4		
Intersection Capacity Utilization	28.6%	ICU Level of Service	A
Analysis Period (min)	15		

Movement	EBL	EBT	EBR	WBL	WBT	WBR	NBL	NBT	NBR	SBL	SBT	SBR
Lane Configurations												
Volume (vph)	99	642	86	46	414	52	98	124	45	117	135	79
Ideal Flow (vphpl)	1900	1900	1900	1900	1900	1900	1900	1900	1900	1900	1900	1900
Total Lost time (s)	4.0	4.0		4.0	4.0		4.0	4.0	4.0	4.0	4.0	4.0
Lane Util. Factor	1.00	0.95		1.00	0.95		1.00	1.00	1.00	1.00	1.00	1.00
Frt	1.00	0.98		1.00	0.98		1.00	1.00	0.85	1.00	1.00	0.85
Flt Protected	0.95	1.00		0.95	1.00		0.95	1.00	1.00	0.95	1.00	1.00
Satd. Flow (prot)	1805	3546		1805	3550		1805	1900	1615	1805	1900	1615
Flt Permitted	0.95	1.00		0.95	1.00		0.95	1.00	1.00	0.95	1.00	1.00
Satd. Flow (perm)	1805	3546		1805	3550		1805	1900	1615	1805	1900	1615
Peak-hour factor, PHF	0.91	0.91	0.91	0.91	0.91	0.91	0.91	0.91	0.91	0.91	0.91	0.91
Adj. Flow (vph)	109	705	95	51	455	57	108	136	49	129	148	87
RTOR Reduction (vph)	0	9	0	0	9	0	0	0	43	0	0	75
Lane Group Flow (vph)	109	791	0	51	503	0	108	136	6	129	148	12
Heavy Vehicles (%)	0%	0%	0%	0%	0%	0%	0%	0%	0%	0%	0%	0%
Turn Type	Prot			Prot			Prot		Perm	Prot		Perm
Protected Phases	1	6		5	2		3	8		7	4	
Permitted Phases									8			4
Actuated Green, G (s)	5.8	23.9		3.2	21.3		5.8	7.1	7.1	6.3	7.6	7.6
Effective Green, g (s)	6.3	24.4		3.7	21.8		6.3	7.6	7.6	6.8	8.1	8.1
Actuated g/C Ratio	0.11	0.42		0.06	0.37		0.11	0.13	0.13	0.12	0.14	0.14
Clearance Time (s)	4.5	4.5		4.5	4.5		4.5	4.5	4.5	4.5	4.5	4.5
Vehicle Extension (s)	1.0	3.0		1.0	3.0		1.0	2.0	2.0	1.0	2.0	2.0
Lane Grp Cap (vph)	194	1479		114	1323		194	247	210	210	263	224
v/s Ratio Prot	c0.06	c0.22		0.03	0.14		0.06	0.07		c0.07	c0.08	
v/s Ratio Perm									0.00			0.01
v/c Ratio	0.56	0.53		0.45	0.38		0.56	0.55	0.03	0.61	0.56	0.05
Uniform Delay, d1	24.8	12.8		26.4	13.4		24.8	23.8	22.2	24.6	23.5	21.9
Progression Factor	1.00	1.00		1.00	1.00		1.00	1.00	1.00	1.00	1.00	1.00
Incremental Delay, d2	2.2	0.4		1.0	0.2		2.0	1.5	0.0	3.7	1.6	0.0
Delay (s)	27.0	13.2		27.4	13.6		26.7	25.4	22.3	28.3	25.2	21.9
Level of Service	C	B		C	B		C	C	C	C	C	C
Approach Delay (s)		14.8			14.9			25.3			25.5	
Approach LOS		B			B			C			C	

Intersection Summary			
HCM Average Control Delay	18.1	HCM Level of Service	B
HCM Volume to Capacity ratio	0.53		
Actuated Cycle Length (s)	58.5	Sum of lost time (s)	12.0
Intersection Capacity Utilization	52.0%	ICU Level of Service	A
Analysis Period (min)	15		

c Critical Lane Group

Movement	EBL	EBT	EBR	WBL	WBT	WBR	NBL	NBT	NBR	SBL	SBT	SBR
Lane Configurations												
Volume (vph)	478	802	754	298	387	235	253	810	89	284	698	82
Ideal Flow (vphpl)	1900	1900	1900	1900	1900	1900	1900	1900	1900	1900	1900	1900
Total Lost time (s)	4.0	4.0	4.0	4.0	4.0	4.0	4.0	4.0	4.0	4.0	4.0	4.0
Lane Util. Factor	0.97	0.91	1.00	0.97	0.91	1.00	0.97	0.95	1.00	0.97	0.95	1.00
Frt	1.00	1.00	0.85	1.00	1.00	0.85	1.00	1.00	0.85	1.00	1.00	0.85
Flt Protected	0.95	1.00	1.00	0.95	1.00	1.00	0.95	1.00	1.00	0.95	1.00	1.00
Satd. Flow (prot)	3502	5187	1615	3502	5187	1615	3502	3610	1615	3502	3610	1615
Flt Permitted	0.95	1.00	1.00	0.95	1.00	1.00	0.95	1.00	1.00	0.95	1.00	1.00
Satd. Flow (perm)	3502	5187	1615	3502	5187	1615	3502	3610	1615	3502	3610	1615
Peak-hour factor, PHF	0.96	0.96	0.96	0.96	0.96	0.96	0.96	0.96	0.96	0.96	0.96	0.96
Adj. Flow (vph)	498	835	785	310	403	245	264	844	93	296	727	85
RTOR Reduction (vph)	0	0	0	0	0	194	0	0	35	0	0	39
Lane Group Flow (vph)	498	835	785	310	403	51	264	844	58	296	727	46
Heavy Vehicles (%)	0%	0%	0%	0%	0%	0%	0%	0%	0%	0%	0%	0%
Turn Type	Prot		Free	Prot		Perm	Prot		Perm	Prot		Perm
Protected Phases	5	2		1	6		7	4		3	8	
Permitted Phases			Free			6			4			8
Actuated Green, G (s)	19.0	27.6	130.0	16.3	24.9	24.9	15.1	48.2	48.2	15.9	49.0	49.0
Effective Green, g (s)	20.0	29.6	130.0	17.3	26.9	26.9	16.1	50.2	50.2	16.9	51.0	51.0
Actuated g/C Ratio	0.15	0.23	1.00	0.13	0.21	0.21	0.12	0.39	0.39	0.13	0.39	0.39
Clearance Time (s)	5.0	6.0		5.0	6.0	6.0	5.0	6.0	6.0	5.0	6.0	6.0
Vehicle Extension (s)	3.0	3.0		3.0	3.0	3.0	3.0	3.0	3.0	3.0	3.0	3.0
Lane Grp Cap (vph)	539	1181	1615	466	1073	334	434	1394	624	455	1416	634
v/s Ratio Prot	c0.14	c0.16		0.09	0.08		0.08	c0.23		c0.08	0.20	
v/s Ratio Perm			c0.49			0.03			0.04			0.03
v/c Ratio	0.92	0.71	0.49	0.67	0.38	0.15	0.61	0.61	0.09	0.65	0.51	0.07
Uniform Delay, d1	54.2	46.2	0.0	53.6	44.3	42.2	54.0	32.0	25.4	53.7	30.1	24.7
Progression Factor	1.00	1.00	1.00	1.00	1.00	1.00	1.00	1.00	1.00	1.00	1.00	1.00
Incremental Delay, d2	21.7	2.0	1.0	3.6	0.2	0.2	2.4	2.0	0.3	3.3	1.3	0.2
Delay (s)	75.9	48.2	1.0	57.2	44.5	42.4	56.4	33.9	25.7	57.1	31.4	24.9
Level of Service	E	D	A	E	D	D	E	C	C	E	C	C
Approach Delay (s)		37.2			48.1			38.2			37.8	
Approach LOS		D			D			D			D	

Intersection Summary			
HCM Average Control Delay	39.5	HCM Level of Service	D
HCM Volume to Capacity ratio	0.69		
Actuated Cycle Length (s)	130.0	Sum of lost time (s)	12.0
Intersection Capacity Utilization	67.8%	ICU Level of Service	C
Analysis Period (min)	15		

c Critical Lane Group

Movement	EBL	EBT	EBR	WBL	WBT	WBR	NBL	NBT	NBR	SBL	SBT	SBR
Lane Configurations												
Volume (vph)	190	614	300	247	529	152	262	516	93	190	614	300
Ideal Flow (vphpl)	1900	1900	1900	1900	1900	1900	1900	1900	1900	1900	1900	1900
Total Lost time (s)	4.0	4.0	4.0	4.0	4.0	4.0	4.0	4.0	4.0	4.0	4.0	4.0
Lane Util. Factor	0.97	0.95	1.00	0.97	0.95	1.00	0.97	0.95	1.00	0.97	0.95	1.00
Frt	1.00	1.00	0.85	1.00	1.00	0.85	1.00	1.00	0.85	1.00	1.00	0.85
Flt Protected	0.95	1.00	1.00	0.95	1.00	1.00	0.95	1.00	1.00	0.95	1.00	1.00
Satd. Flow (prot)	3502	3610	1615	3502	3610	1615	3502	3610	1615	3502	3610	1615
Flt Permitted	0.95	1.00	1.00	0.95	1.00	1.00	0.95	1.00	1.00	0.95	1.00	1.00
Satd. Flow (perm)	3502	3610	1615	3502	3610	1615	3502	3610	1615	3502	3610	1615
Peak-hour factor, PHF	0.96	0.96	0.96	0.96	0.96	0.96	0.96	0.96	0.96	0.96	0.96	0.96
Adj. Flow (vph)	198	640	312	257	551	158	273	538	97	198	640	312
RTOR Reduction (vph)	0	0	147	0	0	75	0	0	63	0	0	106
Lane Group Flow (vph)	198	640	165	257	551	83	273	538	34	198	640	206
Heavy Vehicles (%)	0%	0%	0%	0%	0%	0%	0%	0%	0%	0%	0%	0%
Turn Type	Prot		Perm	Prot		Perm	Prot		Perm	Prot		Perm
Protected Phases	5	2		1	6		3	8		7	4	
Permitted Phases			2			6			8			4
Actuated Green, G (s)	10.6	41.5	41.5	12.4	43.3	43.3	12.7	25.5	25.5	10.6	23.4	23.4
Effective Green, g (s)	11.1	43.0	43.0	12.9	44.8	44.8	13.2	27.0	27.0	11.1	24.9	24.9
Actuated g/C Ratio	0.10	0.39	0.39	0.12	0.41	0.41	0.12	0.25	0.25	0.10	0.23	0.23
Clearance Time (s)	4.5	5.5	5.5	4.5	5.5	5.5	4.5	5.5	5.5	4.5	5.5	5.5
Vehicle Extension (s)	2.0	2.5	2.5	2.0	2.5	2.5	2.0	2.0	2.0	2.0	2.0	2.0
Lane Grp Cap (vph)	353	1411	631	411	1470	658	420	886	396	353	817	366
v/s Ratio Prot	0.06	c0.18		c0.07	0.15		c0.08	0.15		0.06	c0.18	
v/s Ratio Perm			0.10			0.05			0.02			0.13
v/c Ratio	0.56	0.45	0.26	0.63	0.37	0.13	0.65	0.61	0.09	0.56	0.78	0.56
Uniform Delay, d1	47.1	24.8	22.7	46.2	22.8	20.4	46.2	36.8	32.0	47.1	40.0	37.7
Progression Factor	1.00	1.00	1.00	1.00	1.00	1.00	1.00	1.00	1.00	1.00	1.00	1.00
Incremental Delay, d2	1.2	1.1	1.0	2.1	0.7	0.4	2.7	0.8	0.0	1.2	4.6	1.2
Delay (s)	48.3	25.9	23.7	48.4	23.5	20.8	48.9	37.6	32.0	48.3	44.6	38.9
Level of Service	D	C	C	D	C	C	D	D	C	D	D	D
Approach Delay (s)		29.2			29.7			40.4			43.7	
Approach LOS		C			C			D			D	

Intersection Summary			
HCM Average Control Delay	35.7	HCM Level of Service	D
HCM Volume to Capacity ratio	0.59		
Actuated Cycle Length (s)	110.0	Sum of lost time (s)	16.0
Intersection Capacity Utilization	61.8%	ICU Level of Service	B
Analysis Period (min)	15		

c Critical Lane Group

Movement	EBL	EBT	EBR	WBL	WBT	WBR	NBL	NBT	NBR	SBL	SBT	SBR
Lane Configurations												
Volume (vph)	79	588	102	75	559	39	121	133	45	71	129	94
Ideal Flow (vphpl)	1900	1900	1900	1900	1900	1900	1900	1900	1900	1900	1900	1900
Total Lost time (s)	4.0	4.0		4.0	4.0		4.0	4.0		4.0	4.0	4.0
Lane Util. Factor	1.00	0.95		1.00	0.95		1.00	1.00		1.00	1.00	1.00
Frt	1.00	0.98		1.00	0.99		1.00	0.96		1.00	1.00	0.85
Flt Protected	0.95	1.00		0.95	1.00		0.95	1.00		0.95	1.00	1.00
Satd. Flow (prot)	1787	3495		1805	3575		1787	1810		1770	1863	1583
Flt Permitted	0.95	1.00		0.95	1.00		0.95	1.00		0.95	1.00	1.00
Satd. Flow (perm)	1787	3495		1805	3575		1787	1810		1770	1863	1583
Peak-hour factor, PHF	0.88	0.88	0.88	0.88	0.88	0.88	0.88	0.88	0.88	0.88	0.88	0.88
Adj. Flow (vph)	90	668	116	85	635	44	138	151	51	81	147	107
RTOR Reduction (vph)	0	11	0	0	4	0	0	14	0	0	0	92
Lane Group Flow (vph)	90	773	0	85	675	0	138	188	0	81	147	15
Heavy Vehicles (%)	1%	1%	1%	0%	0%	0%	1%	1%	1%	2%	2%	2%
Turn Type	Prot			Prot			Prot			Prot		Perm
Protected Phases	1	6		5	2		3	8		7	4	
Permitted Phases												4
Actuated Green, G (s)	7.6	47.2		7.4	47.0		11.8	16.6		7.8	12.6	12.6
Effective Green, g (s)	7.6	47.7		7.4	47.5		11.8	17.1		7.8	13.1	13.1
Actuated g/C Ratio	0.08	0.50		0.08	0.49		0.12	0.18		0.08	0.14	0.14
Clearance Time (s)	4.0	4.5		4.0	4.5		4.0	4.5		4.0	4.5	4.5
Vehicle Extension (s)	2.0	5.0		2.0	3.0		2.0	2.0		2.0	2.0	2.0
Lane Grp Cap (vph)	141	1737		139	1769		220	322		144	254	216
v/s Ratio Prot	c0.05	c0.22		0.05	0.19		c0.08	c0.10		0.05	0.08	
v/s Ratio Perm												0.01
v/c Ratio	0.64	0.45		0.61	0.38		0.63	0.58		0.56	0.58	0.07
Uniform Delay, d1	42.9	15.6		42.9	15.1		40.0	36.2		42.5	38.9	36.1
Progression Factor	1.00	1.00		1.00	1.00		1.00	1.00		1.00	1.00	1.00
Incremental Delay, d2	6.8	0.8		5.5	0.6		4.0	1.7		3.0	2.0	0.1
Delay (s)	49.7	16.4		48.4	15.7		44.0	37.9		45.4	40.8	36.2
Level of Service	D	B		D	B		D	D		D	D	D
Approach Delay (s)		19.9			19.4			40.4			40.5	
Approach LOS		B			B			D			D	

Intersection Summary			
HCM Average Control Delay	25.7	HCM Level of Service	C
HCM Volume to Capacity ratio	0.50		
Actuated Cycle Length (s)	96.0	Sum of lost time (s)	12.0
Intersection Capacity Utilization	50.7%	ICU Level of Service	A
Analysis Period (min)	15		

c Critical Lane Group

Movement	EBL	EBT	EBR	WBL	WBT	WBR	NBL	NBT	NBR	SBL	SBT	SBR
Lane Configurations												
Volume (veh/h)	10	36	42	89	16	22	11	35	69	4	44	9
Sign Control		Stop			Stop			Free			Free	
Grade		0%			0%			0%			0%	
Peak Hour Factor	0.90	0.90	0.90	0.90	0.90	0.90	0.90	0.90	0.90	0.90	0.90	0.90
Hourly flow rate (vph)	11	40	47	99	18	24	12	39	77	4	49	10
Pedestrians												
Lane Width (ft)												
Walking Speed (ft/s)												
Percent Blockage												
Right turn flare (veh)												
Median type								None			None	
Median storage veh)												
Upstream signal (ft)												
pX, platoon unblocked												
vC, conflicting volume	198	203	54	231	169	77	59			116		
vC1, stage 1 conf vol												
vC2, stage 2 conf vol												
vCu, unblocked vol	198	203	54	231	169	77	59			116		
tC, single (s)	7.1	6.5	6.2	7.1	6.5	6.2	4.1			4.1		
tC, 2 stage (s)												
tF (s)	3.5	4.0	3.3	3.5	4.0	3.3	2.2			2.2		
p0 queue free %	98	94	95	85	98	98	99			100		
cM capacity (veh/h)	726	689	1019	658	719	989	1545			1473		

Direction, Lane #	EB 1	WB 1	NB 1	SB 1
Volume Total	98	141	128	63
Volume Left	11	99	12	4
Volume Right	47	24	77	10
cSH	821	707	1545	1473
Volume to Capacity	0.12	0.20	0.01	0.00
Queue Length 95th (ft)	10	19	1	0
Control Delay (s)	10.0	11.4	0.8	0.5
Lane LOS	A	B	A	A
Approach Delay (s)	10.0	11.4	0.8	0.5
Approach LOS	A	B		

Intersection Summary			
Average Delay	6.3		
Intersection Capacity Utilization	29.9%	ICU Level of Service	A
Analysis Period (min)	15		

Movement	EBL	EBR	NBL	NBT	SBT	SBR
Lane Configurations						
Volume (vph)	49	654	532	69	91	71
Ideal Flow (vphpl)	1900	1900	1900	1900	1900	1900
Total Lost time (s)	4.0	4.0	4.0	4.0	4.0	
Lane Util. Factor	1.00	1.00	1.00	1.00	1.00	
Frt	1.00	0.85	1.00	1.00	0.94	
Flt Protected	0.95	1.00	0.95	1.00	1.00	
Satd. Flow (prot)	1787	1599	1805	1900	1770	
Flt Permitted	0.95	1.00	0.95	1.00	1.00	
Satd. Flow (perm)	1787	1599	1805	1900	1770	
Peak-hour factor, PHF	0.98	0.98	0.98	0.98	0.98	0.98
Adj. Flow (vph)	50	667	543	70	93	72
RTOR Reduction (vph)	0	551	0	0	50	0
Lane Group Flow (vph)	50	116	543	70	115	0
Heavy Vehicles (%)	1%	1%	0%	0%	1%	1%
Turn Type		Perm	Prot			
Protected Phases	2		3	8	4	
Permitted Phases		2				
Actuated Green, G (s)	8.5	8.5	20.7	31.8	6.6	
Effective Green, g (s)	8.5	8.5	21.2	32.3	7.1	
Actuated g/C Ratio	0.17	0.17	0.43	0.66	0.15	
Clearance Time (s)	4.0	4.0	4.5	4.5	4.5	
Vehicle Extension (s)	2.0	2.0	2.0	2.5	2.5	
Lane Grp Cap (vph)	311	279	784	1258	258	
v/s Ratio Prot	0.03		c0.30	0.04	c0.06	
v/s Ratio Perm		c0.07				
v/c Ratio	0.16	0.42	0.69	0.06	0.44	
Uniform Delay, d1	17.1	17.9	11.2	2.9	19.0	
Progression Factor	1.00	1.00	1.00	1.00	1.00	
Incremental Delay, d2	0.1	0.4	2.1	0.0	0.9	
Delay (s)	17.2	18.3	13.3	2.9	19.9	
Level of Service	B	B	B	A	B	
Approach Delay (s)	18.2			12.1	19.9	
Approach LOS	B			B	B	

Intersection Summary			
HCM Average Control Delay	15.9	HCM Level of Service	B
HCM Volume to Capacity ratio	0.58		
Actuated Cycle Length (s)	48.8	Sum of lost time (s)	12.0
Intersection Capacity Utilization	56.3%	ICU Level of Service	B
Analysis Period (min)	15		

c Critical Lane Group

Movement	EBL	EBT	EBR	WBL	WBT	WBR	NBL	NBT	NBR	SBL	SBT	SBR
Lane Configurations												
Volume (vph)	91	549	556	171	413	129	516	390	123	183	464	92
Ideal Flow (vphpl)	1900	1900	1900	1900	1900	1900	1900	1900	1900	1900	1900	1900
Total Lost time (s)	4.0	4.0	4.0	4.0	4.0		4.0	4.0	4.0	4.0	4.0	
Lane Util. Factor	1.00	0.95	1.00	1.00	0.95		0.94	0.95	1.00	1.00	0.95	
Frt	1.00	1.00	0.85	1.00	0.96		1.00	1.00	0.85	1.00	0.98	
Flt Protected	0.95	1.00	1.00	0.95	1.00		0.95	1.00	1.00	0.95	1.00	
Satd. Flow (prot)	1805	3610	1615	1805	3481		5090	3610	1615	1787	3485	
Flt Permitted	0.95	1.00	1.00	0.95	1.00		0.95	1.00	1.00	0.95	1.00	
Satd. Flow (perm)	1805	3610	1615	1805	3481		5090	3610	1615	1787	3485	
Peak-hour factor, PHF	0.97	0.97	0.97	0.97	0.97	0.97	0.97	0.97	0.97	0.97	0.97	0.97
Adj. Flow (vph)	94	566	573	176	426	133	532	402	127	189	478	95
RTOR Reduction (vph)	0	0	359	0	31	0	0	0	101	0	18	0
Lane Group Flow (vph)	94	566	214	176	528	0	532	402	26	189	555	0
Heavy Vehicles (%)	0%	0%	0%	0%	0%	0%	0%	0%	0%	1%	1%	1%
Turn Type	Prot		Perm	Prot			Prot		Perm	Prot		
Protected Phases	7	4		3	8		5	2		1	6	
Permitted Phases			4						2			
Actuated Green, G (s)	7.3	19.2	19.2	11.6	23.5		12.4	15.1	15.1	11.9	14.6	
Effective Green, g (s)	8.8	20.7	20.7	13.1	25.0		13.9	16.6	16.6	13.4	16.1	
Actuated g/C Ratio	0.11	0.26	0.26	0.16	0.31		0.17	0.21	0.21	0.17	0.20	
Clearance Time (s)	5.5	5.5	5.5	5.5	5.5		5.5	5.5	5.5	5.5	5.5	
Vehicle Extension (s)	2.0	3.0	3.0	2.0	3.0		2.0	3.0	3.0	2.0	3.0	
Lane Grp Cap (vph)	199	936	419	296	1091		887	751	336	300	703	
v/s Ratio Prot	0.05	c0.16		c0.10	0.15		0.10	0.11		c0.11	c0.16	
v/s Ratio Perm			0.13						0.02			
v/c Ratio	0.47	0.60	0.51	0.59	0.48		0.60	0.54	0.08	0.63	0.79	
Uniform Delay, d1	33.3	26.0	25.2	30.9	22.2		30.4	28.2	25.4	30.9	30.2	
Progression Factor	1.00	1.00	1.00	1.00	1.00		1.00	1.00	1.00	1.00	1.00	
Incremental Delay, d2	0.6	1.1	1.1	2.1	0.3		0.7	0.7	0.1	3.1	5.9	
Delay (s)	34.0	27.1	26.3	33.0	22.5		31.1	28.9	25.5	34.0	36.1	
Level of Service	C	C	C	C	C		C	C	C	C	D	
Approach Delay (s)		27.2			25.0			29.6			35.6	
Approach LOS		C			C			C			D	

Intersection Summary			
HCM Average Control Delay	29.2	HCM Level of Service	C
HCM Volume to Capacity ratio	0.65		
Actuated Cycle Length (s)	79.8	Sum of lost time (s)	16.0
Intersection Capacity Utilization	69.7%	ICU Level of Service	C
Analysis Period (min)	15		

c Critical Lane Group

Level Of Service Computation Report
2000 HCM 4-Way Stop Method (Future Volume Alternative)

Intersection #4 Larch Rd/Tracy Blvd

Cycle (sec):	100	Critical Vol./Cap.(X):	0.288
Loss Time (sec):	0 (Y+R=4.0 sec)	Average Delay (sec/veh):	10.3
Optimal Cycle:	0	Level Of Service:	B

Street Name:	Tracy Blvd						Larch Rd					
Approach:	North Bound			South Bound			East Bound			West Bound		
Movement:	L - T - R			L - T - R			L - T - R			L - T - R		
Control:	Stop Sign			Stop Sign			Stop Sign			Stop Sign		
Rights:	Include			Include			Include			Include		
Min. Green:	0	0	0	0	0	0	0	0	0	0	0	0
Lanes:	1 0 1 0 1			1 0 0 1 0			0 0 1! 0 0			0 1 0 0 1		
Volume Module:												
Base Vol:	80	114	67	8	89	9	8	46	69	92	44	2
Growth Adj:	1.00	1.00	1.00	1.00	1.00	1.00	1.00	1.00	1.00	1.00	1.00	1.00
Initial Bse:	80	114	67	8	89	9	8	46	69	92	44	2
Added Vol:	0	0	0	0	0	0	0	0	0	0	0	0
PasserByVol:	0	0	0	0	0	0	0	0	0	0	0	0
Initial Fut:	80	114	67	8	89	9	8	46	69	92	44	2
User Adj:	1.00	1.00	1.00	1.00	1.00	1.00	1.00	1.00	1.00	1.00	1.00	1.00
PHF Adj:	0.86	0.86	0.86	0.86	0.86	0.86	0.86	0.86	0.86	0.86	0.86	0.86
PHF Volume:	93	133	78	9	103	10	9	53	80	107	51	2
Reduct Vol:	0	0	0	0	0	0	0	0	0	0	0	0
Reduced Vol:	93	133	78	9	103	10	9	53	80	107	51	2
PCE Adj:	1.00	1.00	1.00	1.00	1.00	1.00	1.00	1.00	1.00	1.00	1.00	1.00
MLF Adj:	1.00	1.00	1.00	1.00	1.00	1.00	1.00	1.00	1.00	1.00	1.00	1.00
FinalVolume:	93	133	78	9	103	10	9	53	80	107	51	2
Saturation Flow Module:												
Adjustment:	1.00	1.00	1.00	1.00	1.00	1.00	1.00	1.00	1.00	1.00	1.00	1.00
Lanes:	1.00	1.00	1.00	1.00	0.91	0.09	0.07	0.37	0.56	0.68	0.32	1.00
Final Sat.:	538	583	656	524	520	53	40	228	341	371	178	649
Capacity Analysis Module:												
Vol/Sat:	0.17	0.23	0.12	0.02	0.20	0.20	0.24	0.24	0.24	0.29	0.29	0.00
Crit Moves:	****			****			****			****		
Delay/Veh:	10.4	10.3	8.6	9.3	10.0	10.0	10.2	10.2	10.2	11.3	11.3	7.9
Delay Adj:	1.00	1.00	1.00	1.00	1.00	1.00	1.00	1.00	1.00	1.00	1.00	1.00
AdjDel/Veh:	10.4	10.3	8.6	9.3	10.0	10.0	10.2	10.2	10.2	11.3	11.3	7.9
LOS by Move:	B	B	A	A	B	B	B	B	B	B	B	A
ApproachDel:	9.9			10.0			10.2			11.3		
Delay Adj:	1.00			1.00			1.00			1.00		
ApprAdjDel:	9.9			10.0			10.2			11.3		
LOS by Appr:	A			A			B			B		
AllWayAvgQ:	0.2	0.3	0.1	0.0	0.2	0.2	0.3	0.3	0.3	0.4	0.4	0.0

Note: Queue reported is the number of cars per lane.

Movement	EBL	EBT	EBR	WBL	WBT	WBR	NBL	NBT	NBR	SBL	SBT	SBR
Lane Configurations												
Volume (vph)	0	0	0	344	4	108	208	262	0	0	279	105
Ideal Flow (vphpl)	1900	1900	1900	1900	1900	1900	1900	1900	1900	1900	1900	1900
Total Lost time (s)					4.0	4.0	4.0	4.0			4.0	
Lane Util. Factor					1.00	1.00	1.00	0.95			0.95	
Frt					1.00	0.85	1.00	1.00			0.96	
Flt Protected					0.95	1.00	0.95	1.00			1.00	
Satd. Flow (prot)					1741	1553	1736	3471			3297	
Flt Permitted					0.95	1.00	0.95	1.00			1.00	
Satd. Flow (perm)					1741	1553	1736	3471			3297	
Peak-hour factor, PHF	0.95	0.95	0.95	0.95	0.95	0.95	0.95	0.95	0.95	0.95	0.95	0.95
Adj. Flow (vph)	0	0	0	362	4	114	219	276	0	0	294	111
RTOR Reduction (vph)	0	0	0	0	0	53	0	0	0	0	41	0
Lane Group Flow (vph)	0	0	0	0	366	61	219	276	0	0	364	0
Heavy Vehicles (%)	0%	0%	0%	4%	4%	4%	4%	4%	4%	5%	5%	5%
Turn Type				Perm		Perm	Prot					
Protected Phases					8		5	2			6	
Permitted Phases				8		8						
Actuated Green, G (s)					18.9	18.9	13.9	34.0			16.1	
Effective Green, g (s)					18.9	18.9	13.9	34.9			17.0	
Actuated g/C Ratio					0.31	0.31	0.22	0.56			0.28	
Clearance Time (s)					4.0	4.0	4.0	4.9			4.9	
Vehicle Extension (s)					3.0	3.0	3.0	3.0			3.0	
Lane Grp Cap (vph)					532	475	390	1960			907	
v/s Ratio Prot							c0.13	0.08			c0.11	
v/s Ratio Perm					0.21	0.04						
v/c Ratio					0.69	0.13	0.56	0.14			0.40	
Uniform Delay, d1					18.9	15.5	21.2	6.4			18.3	
Progression Factor					1.00	1.00	1.00	1.00			1.00	
Incremental Delay, d2					3.7	0.1	1.9	0.0			0.3	
Delay (s)					22.6	15.6	23.1	6.4			18.5	
Level of Service					C	B	C	A			B	
Approach Delay (s)		0.0			20.9			13.8			18.5	
Approach LOS		A			C			B			B	

Intersection Summary			
HCM Average Control Delay	17.7	HCM Level of Service	B
HCM Volume to Capacity ratio	0.55		
Actuated Cycle Length (s)	61.8	Sum of lost time (s)	12.0
Intersection Capacity Utilization	53.3%	ICU Level of Service	A
Analysis Period (min)	15		

c Critical Lane Group

Movement	EBL	EBT	EBR	WBL	WBT	WBR	NBL	NBT	NBR	SBL	SBT	SBR
Lane Configurations												
Volume (vph)	86	9	183	0	0	0	0	384	292	95	528	0
Ideal Flow (vphpl)	1900	1900	1900	1900	1900	1900	1900	1900	1900	1900	1900	1900
Total Lost time (s)		4.0	4.0					4.0		4.0	4.0	
Lane Util. Factor		1.00	1.00					0.95		1.00	0.95	
Frt		1.00	0.85					0.94		1.00	1.00	
Flt Protected		0.96	1.00					1.00		0.95	1.00	
Satd. Flow (prot)		1715	1524					3310		1752	3505	
Flt Permitted		0.96	1.00					1.00		0.95	1.00	
Satd. Flow (perm)		1715	1524					3310		1752	3505	
Peak-hour factor, PHF	0.91	0.91	0.91	0.91	0.91	0.91	0.91	0.91	0.91	0.91	0.91	0.91
Adj. Flow (vph)	95	10	201	0	0	0	0	422	321	104	580	0
RTOR Reduction (vph)	0	0	157	0	0	0	0	137	0	0	0	0
Lane Group Flow (vph)	0	105	44	0	0	0	0	606	0	104	580	0
Heavy Vehicles (%)	6%	6%	6%	0%	0%	0%	2%	2%	2%	3%	3%	3%
Turn Type	Perm		Perm							Prot		
Protected Phases		4						2		1	6	
Permitted Phases	4		4									
Actuated Green, G (s)		8.9	8.9					15.4		6.8	26.2	
Effective Green, g (s)		9.8	9.8					16.3		6.8	27.1	
Actuated g/C Ratio		0.22	0.22					0.36		0.15	0.60	
Clearance Time (s)		4.9	4.9					4.9		4.0	4.9	
Vehicle Extension (s)		3.0	3.0					3.0		3.0	3.0	
Lane Grp Cap (vph)		374	333					1202		265	2115	
v/s Ratio Prot								c0.18		c0.06	0.17	
v/s Ratio Perm		0.06	0.03									
v/c Ratio		0.28	0.13					0.50		0.39	0.27	
Uniform Delay, d1		14.6	14.1					11.1		17.2	4.2	
Progression Factor		1.00	1.00					1.00		1.00	1.00	
Incremental Delay, d2		0.4	0.2					0.3		1.0	0.1	
Delay (s)		15.0	14.3					11.5		18.1	4.3	
Level of Service		B	B					B		B	A	
Approach Delay (s)		14.6			0.0			11.5			6.4	
Approach LOS		B			A			B			A	

Intersection Summary			
HCM Average Control Delay	10.0	HCM Level of Service	B
HCM Volume to Capacity ratio	0.41		
Actuated Cycle Length (s)	44.9	Sum of lost time (s)	12.0
Intersection Capacity Utilization	53.3%	ICU Level of Service	A
Analysis Period (min)	15		

c Critical Lane Group

Movement	EBL	EBT	EBR	WBL	WBT	WBR	NBL	NBT	NBR	SBL	SBT	SBR
Lane Configurations												
Volume (vph)	189	406	153	127	310	122	221	473	100	188	565	159
Ideal Flow (vphpl)	1900	1900	1900	1900	1900	1900	1900	1900	1900	1900	1900	1900
Total Lost time (s)	4.0	4.0		4.0	4.0		4.0	4.0		4.0	4.0	
Lane Util. Factor	1.00	0.95		1.00	0.95		1.00	0.95		1.00	0.95	
Frt	1.00	0.96		1.00	0.96		1.00	0.97		1.00	0.97	
Flt Protected	0.95	1.00		0.95	1.00		0.95	1.00		0.95	1.00	
Satd. Flow (prot)	1805	3462		1787	3423		1787	3481		1787	3456	
Flt Permitted	0.95	1.00		0.95	1.00		0.95	1.00		0.95	1.00	
Satd. Flow (perm)	1805	3462		1787	3423		1787	3481		1787	3456	
Peak-hour factor, PHF	0.97	0.97	0.97	0.97	0.97	0.97	0.97	0.97	0.97	0.97	0.97	0.97
Adj. Flow (vph)	195	419	158	131	320	126	228	488	103	194	582	164
RTOR Reduction (vph)	0	41	0	0	46	0	0	15	0	0	22	0
Lane Group Flow (vph)	195	536	0	131	400	0	228	576	0	194	724	0
Heavy Vehicles (%)	0%	0%	0%	1%	1%	1%	1%	1%	1%	1%	1%	1%
Turn Type	Prot			Prot			Prot			Prot		
Protected Phases	5	2		1	6		3	8		7	4	
Permitted Phases												
Actuated Green, G (s)	13.6	19.6		10.5	16.5		15.0	33.7		13.7	32.4	
Effective Green, g (s)	14.1	20.6		11.0	17.5		15.5	34.2		14.2	32.9	
Actuated g/C Ratio	0.15	0.21		0.11	0.18		0.16	0.36		0.15	0.34	
Clearance Time (s)	4.5	5.0		4.5	5.0		4.5	4.5		4.5	4.5	
Vehicle Extension (s)	1.0	3.0		1.0	3.0		1.0	3.0		1.0	3.0	
Lane Grp Cap (vph)	265	743		205	624		289	1240		264	1184	
v/s Ratio Prot	c0.11	c0.15		0.07	0.12		c0.13	0.17		0.11	c0.21	
v/s Ratio Perm												
v/c Ratio	0.74	0.72		0.64	0.64		0.79	0.46		0.73	0.61	
Uniform Delay, d1	39.2	35.0		40.6	36.3		38.7	23.8		39.1	26.2	
Progression Factor	1.00	1.00		1.00	1.00		1.00	1.00		1.00	1.00	
Incremental Delay, d2	8.8	3.5		4.7	2.3		12.4	1.3		8.8	2.4	
Delay (s)	48.0	38.5		45.3	38.6		51.0	25.1		47.9	28.6	
Level of Service	D	D		D	D		D	C		D	C	
Approach Delay (s)		40.9			40.1			32.3			32.6	
Approach LOS		D			D			C			C	

Intersection Summary			
HCM Average Control Delay	36.0	HCM Level of Service	D
HCM Volume to Capacity ratio	0.71		
Actuated Cycle Length (s)	96.0	Sum of lost time (s)	16.0
Intersection Capacity Utilization	69.4%	ICU Level of Service	C
Analysis Period (min)	15		

c Critical Lane Group

Movement	EBL	EBT	EBR	WBL	WBT	WBR	NBL	NBT	NBR	SBL	SBT	SBR
Lane Configurations												
Volume (veh/h)	35	3	47	2	5	1	33	26	2	3	32	18
Sign Control		Stop			Stop			Free			Free	
Grade		0%			0%			0%			0%	
Peak Hour Factor	0.94	0.94	0.94	0.94	0.94	0.94	0.94	0.94	0.94	0.94	0.94	0.94
Hourly flow rate (vph)	37	3	50	2	5	1	35	28	2	3	34	19
Pedestrians												
Lane Width (ft)												
Walking Speed (ft/s)												
Percent Blockage												
Right turn flare (veh)												
Median type								None			None	
Median storage veh)												
Upstream signal (ft)												
pX, platoon unblocked												
vC, conflicting volume	153	150	44	201	159	29	53			30		
vC1, stage 1 conf vol												
vC2, stage 2 conf vol												
vCu, unblocked vol	153	150	44	201	159	29	53			30		
tC, single (s)	7.1	6.5	6.2	7.1	6.5	6.2	4.1			4.1		
tC, 2 stage (s)												
tF (s)	3.5	4.0	3.3	3.5	4.0	3.3	2.2			2.2		
p0 queue free %	95	100	95	100	99	100	98			100		
cM capacity (veh/h)	796	725	1029	709	719	1052	1546			1590		

Direction, Lane #	EB 1	EB 2	WB 1	NB 1	SB 1
Volume Total	37	53	9	65	56
Volume Left	37	0	2	35	3
Volume Right	0	50	1	2	19
cSH	796	1004	746	1546	1590
Volume to Capacity	0.05	0.05	0.01	0.02	0.00
Queue Length 95th (ft)	4	4	1	2	0
Control Delay (s)	9.7	8.8	9.9	4.1	0.4
Lane LOS	A	A	A	A	A
Approach Delay (s)	9.2		9.9	4.1	0.4
Approach LOS	A		A		

Intersection Summary			
Average Delay	5.5		
Intersection Capacity Utilization	22.8%	ICU Level of Service	A
Analysis Period (min)	15		

Movement	EBL	EBT	EBR	WBL	WBT	WBR	NBL	NBT	NBR	SBL	SBT	SBR
Lane Configurations												
Volume (vph)	53	494	103	35	388	42	77	78	28	83	118	66
Ideal Flow (vphpl)	1900	1900	1900	1900	1900	1900	1900	1900	1900	1900	1900	1900
Total Lost time (s)	4.0	4.0		4.0	4.0		4.0	4.0	4.0	4.0	4.0	4.0
Lane Util. Factor	1.00	0.95		1.00	0.95		1.00	1.00	1.00	1.00	1.00	1.00
Frt	1.00	0.97		1.00	0.99		1.00	1.00	0.85	1.00	1.00	0.85
Flt Protected	0.95	1.00		0.95	1.00		0.95	1.00	1.00	0.95	1.00	1.00
Satd. Flow (prot)	1805	3517		1805	3557		1805	1900	1615	1805	1900	1615
Flt Permitted	0.95	1.00		0.95	1.00		0.95	1.00	1.00	0.95	1.00	1.00
Satd. Flow (perm)	1805	3517		1805	3557		1805	1900	1615	1805	1900	1615
Peak-hour factor, PHF	0.87	0.87	0.87	0.87	0.87	0.87	0.87	0.87	0.87	0.87	0.87	0.87
Adj. Flow (vph)	61	568	118	40	446	48	89	90	32	95	136	76
RTOR Reduction (vph)	0	15	0	0	7	0	0	0	28	0	0	65
Lane Group Flow (vph)	61	671	0	40	487	0	89	90	4	95	136	11
Heavy Vehicles (%)	0%	0%	0%	0%	0%	0%	0%	0%	0%	0%	0%	0%
Turn Type	Prot			Prot			Prot		Perm	Prot		Perm
Protected Phases	1	6		5	2		3	8		7	4	
Permitted Phases									8			4
Actuated Green, G (s)	3.5	23.1		2.0	21.6		5.6	7.3	7.3	5.8	7.5	7.5
Effective Green, g (s)	4.0	23.6		2.5	22.1		6.1	7.8	7.8	6.3	8.0	8.0
Actuated g/C Ratio	0.07	0.42		0.04	0.39		0.11	0.14	0.14	0.11	0.14	0.14
Clearance Time (s)	4.5	4.5		4.5	4.5		4.5	4.5	4.5	4.5	4.5	4.5
Vehicle Extension (s)	1.0	3.0		1.0	3.0		1.0	2.0	2.0	1.0	2.0	2.0
Lane Grp Cap (vph)	128	1477		80	1399		196	264	224	202	270	230
v/s Ratio Prot	c0.03	c0.19		0.02	0.14		0.05	0.05		c0.05	c0.07	
v/s Ratio Perm									0.00			0.01
v/c Ratio	0.48	0.45		0.50	0.35		0.45	0.34	0.02	0.47	0.50	0.05
Uniform Delay, d1	25.1	11.7		26.2	12.0		23.5	21.9	20.9	23.4	22.3	20.8
Progression Factor	1.00	1.00		1.00	1.00		1.00	1.00	1.00	1.00	1.00	1.00
Incremental Delay, d2	1.0	0.2		1.8	0.2		0.6	0.3	0.0	0.6	0.5	0.0
Delay (s)	26.1	11.9		28.0	12.1		24.1	22.2	20.9	24.0	22.8	20.8
Level of Service	C	B		C	B		C	C	C	C	C	C
Approach Delay (s)		13.1			13.3			22.8			22.7	
Approach LOS		B			B			C			C	

Intersection Summary			
HCM Average Control Delay	15.9	HCM Level of Service	B
HCM Volume to Capacity ratio	0.41		
Actuated Cycle Length (s)	56.2	Sum of lost time (s)	8.0
Intersection Capacity Utilization	43.2%	ICU Level of Service	A
Analysis Period (min)	15		

c Critical Lane Group

Movement	EBL	EBT	EBR	WBL	WBT	WBR	NBL	NBT	NBR	SBL	SBT	SBR
Lane Configurations												
Volume (vph)	403	563	294	250	474	319	571	959	99	292	909	145
Ideal Flow (vphpl)	1900	1900	1900	1900	1900	1900	1900	1900	1900	1900	1900	1900
Total Lost time (s)	4.0	4.0	4.0	4.0	4.0	4.0	4.0	4.0	4.0	4.0	4.0	4.0
Lane Util. Factor	0.97	0.91	1.00	0.97	0.91	1.00	0.97	0.95	1.00	0.97	0.95	1.00
Frt	1.00	1.00	0.85	1.00	1.00	0.85	1.00	1.00	0.85	1.00	1.00	0.85
Flt Protected	0.95	1.00	1.00	0.95	1.00	1.00	0.95	1.00	1.00	0.95	1.00	1.00
Satd. Flow (prot)	3502	5187	1615	3502	5187	1615	3502	3610	1615	3502	3610	1615
Flt Permitted	0.95	1.00	1.00	0.95	1.00	1.00	0.95	1.00	1.00	0.95	1.00	1.00
Satd. Flow (perm)	3502	5187	1615	3502	5187	1615	3502	3610	1615	3502	3610	1615
Peak-hour factor, PHF	0.97	0.97	0.97	0.97	0.97	0.97	0.97	0.97	0.97	0.97	0.97	0.97
Adj. Flow (vph)	415	580	303	258	489	329	589	989	102	301	937	149
RTOR Reduction (vph)	0	0	0	0	0	231	0	0	41	0	0	69
Lane Group Flow (vph)	415	580	303	258	489	98	589	989	61	301	937	80
Heavy Vehicles (%)	0%	0%	0%	0%	0%	0%	0%	0%	0%	0%	0%	0%
Turn Type	Prot		Free	Prot		Perm	Prot		Perm	Prot		Perm
Protected Phases	5	2		1	6		7	4		3	8	
Permitted Phases			Free			6			4			8
Actuated Green, G (s)	14.5	18.1	96.2	12.2	15.8	15.8	15.1	30.9	30.9	13.0	28.8	28.8
Effective Green, g (s)	15.5	20.1	96.2	13.2	17.8	17.8	16.1	32.9	32.9	14.0	30.8	30.8
Actuated g/C Ratio	0.16	0.21	1.00	0.14	0.19	0.19	0.17	0.34	0.34	0.15	0.32	0.32
Clearance Time (s)	5.0	6.0		5.0	6.0	6.0	5.0	6.0	6.0	5.0	6.0	6.0
Vehicle Extension (s)	3.0	3.0		3.0	3.0	3.0	3.0	3.0	3.0	3.0	3.0	3.0
Lane Grp Cap (vph)	564	1084	1615	481	960	299	586	1235	552	510	1156	517
v/s Ratio Prot	c0.12	c0.11		0.07	0.09		c0.17	c0.27		0.09	0.26	
v/s Ratio Perm			c0.19			0.06			0.04			0.05
v/c Ratio	0.74	0.54	0.19	0.54	0.51	0.33	1.01	0.80	0.11	0.59	0.81	0.16
Uniform Delay, d1	38.4	33.9	0.0	38.7	35.3	34.0	40.0	28.7	21.6	38.4	30.0	23.4
Progression Factor	1.00	1.00	1.00	1.00	1.00	1.00	1.00	1.00	1.00	1.00	1.00	1.00
Incremental Delay, d2	5.0	0.5	0.3	1.2	0.4	0.6	38.4	3.8	0.1	1.8	4.4	0.1
Delay (s)	43.4	34.4	0.3	39.8	35.7	34.7	78.5	32.5	21.7	40.3	34.4	23.5
Level of Service	D	C	A	D	D	C	E	C	C	D	C	C
Approach Delay (s)		29.3			36.4			48.0			34.5	
Approach LOS		C			D			D			C	

Intersection Summary			
HCM Average Control Delay	37.8	HCM Level of Service	D
HCM Volume to Capacity ratio	0.73		
Actuated Cycle Length (s)	96.2	Sum of lost time (s)	8.0
Intersection Capacity Utilization	75.4%	ICU Level of Service	D
Analysis Period (min)	15		

c Critical Lane Group

Movement	EBL	EBT	EBR	WBL	WBT	WBR	NBL	NBT	NBR	SBL	SBT	SBR
Lane Configurations												
Volume (vph)	175	532	262	121	507	128	282	364	89	107	396	145
Ideal Flow (vphpl)	1900	1900	1900	1900	1900	1900	1900	1900	1900	1900	1900	1900
Total Lost time (s)	4.0	4.0	4.0	4.0	4.0	4.0	4.0	4.0	4.0	4.0	4.0	4.0
Lane Util. Factor	0.97	0.95	1.00	0.97	0.95	1.00	0.97	0.95	1.00	0.97	0.95	1.00
Frt	1.00	1.00	0.85	1.00	1.00	0.85	1.00	1.00	0.85	1.00	1.00	0.85
Flt Protected	0.95	1.00	1.00	0.95	1.00	1.00	0.95	1.00	1.00	0.95	1.00	1.00
Satd. Flow (prot)	3502	3610	1615	3502	3610	1615	3502	3610	1615	3502	3610	1615
Flt Permitted	0.95	1.00	1.00	0.95	1.00	1.00	0.95	1.00	1.00	0.95	1.00	1.00
Satd. Flow (perm)	3502	3610	1615	3502	3610	1615	3502	3610	1615	3502	3610	1615
Peak-hour factor, PHF	0.96	0.96	0.96	0.96	0.96	0.96	0.96	0.96	0.96	0.96	0.96	0.96
Adj. Flow (vph)	182	554	273	126	528	133	294	379	93	111	412	151
RTOR Reduction (vph)	0	0	146	0	0	68	0	0	68	0	0	71
Lane Group Flow (vph)	182	554	127	126	528	65	294	379	25	111	412	80
Heavy Vehicles (%)	0%	0%	0%	0%	0%	0%	0%	0%	0%	0%	0%	0%
Turn Type	Prot		Perm	Prot		Perm	Prot		Perm	Prot		Perm
Protected Phases	5	2		1	6		3	8		7	4	
Permitted Phases			2			6			8			4
Actuated Green, G (s)	8.8	18.1	18.1	7.7	17.0	17.0	11.3	17.8	17.8	7.2	13.7	13.7
Effective Green, g (s)	9.3	19.6	19.6	8.2	18.5	18.5	11.8	19.3	19.3	7.7	15.2	15.2
Actuated g/C Ratio	0.13	0.28	0.28	0.12	0.26	0.26	0.17	0.27	0.27	0.11	0.21	0.21
Clearance Time (s)	4.5	5.5	5.5	4.5	5.5	5.5	4.5	5.5	5.5	4.5	5.5	5.5
Vehicle Extension (s)	2.0	2.5	2.5	2.0	2.5	2.5	2.0	2.0	2.0	2.0	2.0	2.0
Lane Grp Cap (vph)	460	999	447	406	943	422	584	984	440	381	775	347
v/s Ratio Prot	c0.05	c0.15		0.04	0.15		c0.08	0.10		0.03	c0.11	
v/s Ratio Perm			0.08			0.04			0.02			0.05
v/c Ratio	0.40	0.55	0.28	0.31	0.56	0.15	0.50	0.39	0.06	0.29	0.53	0.23
Uniform Delay, d1	28.2	21.9	20.1	28.7	22.6	20.1	26.8	20.9	19.0	29.0	24.6	23.0
Progression Factor	1.00	1.00	1.00	1.00	1.00	1.00	1.00	1.00	1.00	1.00	1.00	1.00
Incremental Delay, d2	0.2	0.5	0.3	0.2	0.6	0.1	0.2	0.1	0.0	0.2	0.4	0.1
Delay (s)	28.4	22.4	20.3	28.9	23.2	20.3	27.1	21.0	19.0	29.2	25.0	23.1
Level of Service	C	C	C	C	C	C	C	C	B	C	C	C
Approach Delay (s)		22.9			23.6			23.1			25.3	
Approach LOS		C			C			C			C	

Intersection Summary			
HCM Average Control Delay	23.6	HCM Level of Service	C
HCM Volume to Capacity ratio	0.49		
Actuated Cycle Length (s)	70.8	Sum of lost time (s)	12.0
Intersection Capacity Utilization	52.0%	ICU Level of Service	A
Analysis Period (min)	15		

c Critical Lane Group

Movement	EBL	EBT	EBR	WBL	WBT	WBR	NBL	NBT	NBR	SBL	SBT	SBR
Lane Configurations												
Volume (vph)	52	509	90	54	509	55	98	111	32	81	117	83
Ideal Flow (vphpl)	1900	1900	1900	1900	1900	1900	1900	1900	1900	1900	1900	1900
Total Lost time (s)	4.0	4.0		4.0	4.0		4.0	4.0		4.0	4.0	4.0
Lane Util. Factor	1.00	0.95		1.00	0.95		1.00	1.00		1.00	1.00	1.00
Frt	1.00	0.98		1.00	0.99		1.00	0.97		1.00	1.00	0.85
Flt Protected	0.95	1.00		0.95	1.00		0.95	1.00		0.95	1.00	1.00
Satd. Flow (prot)	1805	3528		1787	3522		1787	1817		1805	1900	1615
Flt Permitted	0.95	1.00		0.95	1.00		0.95	1.00		0.95	1.00	1.00
Satd. Flow (perm)	1805	3528		1787	3522		1787	1817		1805	1900	1615
Peak-hour factor, PHF	0.98	0.98	0.98	0.98	0.98	0.98	0.98	0.98	0.98	0.98	0.98	0.98
Adj. Flow (vph)	53	519	92	55	519	56	100	113	33	83	119	85
RTOR Reduction (vph)	0	12	0	0	6	0	0	10	0	0	0	74
Lane Group Flow (vph)	53	599	0	55	569	0	100	136	0	83	119	11
Heavy Vehicles (%)	0%	0%	0%	1%	1%	1%	1%	1%	1%	0%	0%	0%
Turn Type	Prot			Prot			Prot			Prot		Perm
Protected Phases	1	6		5	2		3	8		7	4	
Permitted Phases												4
Actuated Green, G (s)	3.7	22.8		3.8	22.9		6.5	7.5		6.0	7.0	7.0
Effective Green, g (s)	3.7	23.3		3.8	23.4		6.5	8.0		6.0	7.5	7.5
Actuated g/C Ratio	0.06	0.41		0.07	0.41		0.11	0.14		0.11	0.13	0.13
Clearance Time (s)	4.0	4.5		4.0	4.5		4.0	4.5		4.0	4.5	4.5
Vehicle Extension (s)	2.0	5.0		2.0	3.0		2.0	2.0		2.0	2.0	2.0
Lane Grp Cap (vph)	117	1440		119	1443		203	255		190	250	212
v/s Ratio Prot	0.03	c0.17		c0.03	0.16		c0.06	c0.07		0.05	0.06	
v/s Ratio Perm												0.01
v/c Ratio	0.45	0.42		0.46	0.39		0.49	0.53		0.44	0.48	0.05
Uniform Delay, d1	25.7	12.0		25.7	11.9		23.8	22.8		24.0	23.0	21.7
Progression Factor	1.00	1.00		1.00	1.00		1.00	1.00		1.00	1.00	1.00
Incremental Delay, d2	1.0	0.4		1.0	0.2		0.7	1.1		0.6	0.5	0.0
Delay (s)	26.7	12.5		26.7	12.0		24.4	23.9		24.6	23.5	21.7
Level of Service	C	B		C	B		C	C		C	C	C
Approach Delay (s)		13.6			13.3			24.1			23.3	
Approach LOS		B			B			C			C	

Intersection Summary			
HCM Average Control Delay	16.4	HCM Level of Service	B
HCM Volume to Capacity ratio	0.42		
Actuated Cycle Length (s)	57.1	Sum of lost time (s)	12.0
Intersection Capacity Utilization	45.9%	ICU Level of Service	A
Analysis Period (min)	15		

c Critical Lane Group

Movement	EBL	EBT	EBR	WBL	WBT	WBR	NBL	NBT	NBR	SBL	SBT	SBR
Lane Configurations												
Volume (veh/h)	20	60	80	70	30	40	40	80	90	10	40	10
Sign Control		Stop			Stop			Free			Free	
Grade		0%			0%			0%			0%	
Peak Hour Factor	0.82	0.82	0.82	0.82	0.82	0.82	0.82	0.82	0.82	0.82	0.82	0.82
Hourly flow rate (vph)	24	73	98	85	37	49	49	98	110	12	49	12
Pedestrians												
Lane Width (ft)												
Walking Speed (ft/s)												
Percent Blockage												
Right turn flare (veh)												
Median type								None			None	
Median storage veh)												
Upstream signal (ft)												
pX, platoon unblocked												
vC, conflicting volume	396	384	55	463	335	152	61			207		
vC1, stage 1 conf vol												
vC2, stage 2 conf vol												
vCu, unblocked vol	396	384	55	463	335	152	61			207		
tC, single (s)	7.1	6.5	6.2	7.1	6.5	6.2	4.1			4.1		
tC, 2 stage (s)												
tF (s)	3.5	4.0	3.3	3.5	4.0	3.3	2.2			2.2		
p0 queue free %	95	86	90	79	94	95	97			99		
cM capacity (veh/h)	494	530	1018	402	565	899	1542			1364		

Direction, Lane #	EB 1	WB 1	NB 1	SB 1
Volume Total	195	171	256	73
Volume Left	24	85	49	12
Volume Right	98	49	110	12
cSH	689	515	1542	1364
Volume to Capacity	0.28	0.33	0.03	0.01
Queue Length 95th (ft)	29	36	2	1
Control Delay (s)	12.3	15.4	1.6	1.3
Lane LOS	B	C	A	A
Approach Delay (s)	12.3	15.4	1.6	1.3
Approach LOS	B	C		

Intersection Summary			
Average Delay	8.0		
Intersection Capacity Utilization	43.8%	ICU Level of Service	A
Analysis Period (min)	15		

Movement	EBL	EBR	NBL	NBT	SBT	SBR
Lane Configurations						
Volume (vph)	50	450	400	170	120	50
Ideal Flow (vphpl)	1900	1900	1900	1900	1900	1900
Total Lost time (s)	4.0	4.0	4.0	4.0	4.0	
Lane Util. Factor	1.00	1.00	1.00	1.00	1.00	
Frt	1.00	0.85	1.00	1.00	0.96	
Flt Protected	0.95	1.00	0.95	1.00	1.00	
Satd. Flow (prot)	1787	1599	1805	1900	1807	
Flt Permitted	0.95	1.00	0.95	1.00	1.00	
Satd. Flow (perm)	1787	1599	1805	1900	1807	
Peak-hour factor, PHF	0.96	0.96	0.96	0.96	0.96	0.96
Adj. Flow (vph)	52	469	417	177	125	52
RTOR Reduction (vph)	0	384	0	0	27	0
Lane Group Flow (vph)	52	85	417	177	151	0
Heavy Vehicles (%)	1%	1%	0%	0%	1%	1%
Turn Type		Perm	Prot			
Protected Phases	2		3	8	4	
Permitted Phases		2				
Actuated Green, G (s)	8.1	8.1	16.5	28.2	7.2	
Effective Green, g (s)	8.1	8.1	17.0	28.7	7.7	
Actuated g/C Ratio	0.18	0.18	0.38	0.64	0.17	
Clearance Time (s)	4.0	4.0	4.5	4.5	4.5	
Vehicle Extension (s)	2.0	2.0	2.0	2.5	2.5	
Lane Grp Cap (vph)	323	289	685	1217	311	
v/s Ratio Prot	0.03		c0.23	0.09	c0.08	
v/s Ratio Perm		c0.05				
v/c Ratio	0.16	0.29	0.61	0.15	0.48	
Uniform Delay, d1	15.5	15.9	11.2	3.2	16.8	
Progression Factor	1.00	1.00	1.00	1.00	1.00	
Incremental Delay, d2	0.1	0.2	1.1	0.0	0.9	
Delay (s)	15.6	16.1	12.3	3.2	17.6	
Level of Service	B	B	B	A	B	
Approach Delay (s)	16.0			9.6	17.6	
Approach LOS	B			A	B	

Intersection Summary			
HCM Average Control Delay	13.3	HCM Level of Service	B
HCM Volume to Capacity ratio	0.50		
Actuated Cycle Length (s)	44.8	Sum of lost time (s)	12.0
Intersection Capacity Utilization	46.5%	ICU Level of Service	A
Analysis Period (min)	15		

c Critical Lane Group

Movement	EBL	EBT	EBR	WBL	WBT	WBR	NBL	NBT	NBR	SBL	SBT	SBR
Lane Configurations												
Volume (vph)	120	750	660	260	440	110	490	390	280	130	380	70
Ideal Flow (vphpl)	1900	1900	1900	1900	1900	1900	1900	1900	1900	1900	1900	1900
Total Lost time (s)	4.0	4.0	4.0	4.0	4.0		4.0	4.0	4.0	4.0	4.0	
Lane Util. Factor	1.00	0.95	1.00	1.00	0.95		0.94	0.95	1.00	1.00	0.95	
Frt	1.00	1.00	0.85	1.00	0.97		1.00	1.00	0.85	1.00	0.98	
Flt Protected	0.95	1.00	1.00	0.95	1.00		0.95	1.00	1.00	0.95	1.00	
Satd. Flow (prot)	1805	3610	1615	1805	3501		5090	3610	1615	1787	3491	
Flt Permitted	0.95	1.00	1.00	0.95	1.00		0.95	1.00	1.00	0.95	1.00	
Satd. Flow (perm)	1805	3610	1615	1805	3501		5090	3610	1615	1787	3491	
Peak-hour factor, PHF	0.96	0.96	0.96	0.96	0.96	0.96	0.96	0.96	0.96	0.96	0.96	0.96
Adj. Flow (vph)	125	781	688	271	458	115	510	406	292	135	396	73
RTOR Reduction (vph)	0	0	280	0	19	0	0	0	192	0	13	0
Lane Group Flow (vph)	125	781	408	271	554	0	510	406	100	135	456	0
Heavy Vehicles (%)	0%	0%	0%	0%	0%	0%	0%	0%	0%	1%	1%	1%
Turn Type	Prot		Perm	Prot			Prot		Perm	Prot		
Protected Phases	7	4		3	8		5	2		1	6	
Permitted Phases			4						2			
Actuated Green, G (s)	11.7	28.5	28.5	14.5	31.3		16.5	37.9	37.9	12.1	33.5	
Effective Green, g (s)	13.2	30.0	30.0	16.0	32.8		18.0	39.4	39.4	13.6	35.0	
Actuated g/C Ratio	0.11	0.26	0.26	0.14	0.29		0.16	0.34	0.34	0.12	0.30	
Clearance Time (s)	5.5	5.5	5.5	5.5	5.5		5.5	5.5	5.5	5.5	5.5	
Vehicle Extension (s)	2.0	3.0	3.0	2.0	3.0		2.0	3.0	3.0	2.0	3.0	
Lane Grp Cap (vph)	207	942	421	251	999		797	1237	553	211	1062	
v/s Ratio Prot	0.07	0.22		c0.15	c0.16		c0.10	0.11		0.08	c0.13	
v/s Ratio Perm			c0.25						0.06			
v/c Ratio	0.60	0.83	0.97	1.08	0.55		0.64	0.33	0.18	0.64	0.43	
Uniform Delay, d1	48.4	40.1	42.0	49.5	34.9		45.5	28.0	26.5	48.4	32.0	
Progression Factor	1.00	1.00	1.00	1.00	1.00		1.00	1.00	1.00	1.00	1.00	
Incremental Delay, d2	3.4	6.1	35.3	79.6	0.7		3.9	0.7	0.7	4.6	0.3	
Delay (s)	51.8	46.2	77.4	129.1	35.6		49.4	28.7	27.2	53.0	32.3	
Level of Service	D	D	E	F	D		D	C	C	D	C	
Approach Delay (s)		60.1			65.6			37.1			36.9	
Approach LOS		E			E			D			D	

Intersection Summary			
HCM Average Control Delay	51.4	HCM Level of Service	D
HCM Volume to Capacity ratio	0.75		
Actuated Cycle Length (s)	115.0	Sum of lost time (s)	20.0
Intersection Capacity Utilization	78.0%	ICU Level of Service	D
Analysis Period (min)	15		

c Critical Lane Group

Level Of Service Computation Report
2000 HCM 4-Way Stop Method (Future Volume Alternative)

Intersection #4 Larch Rd/Tracy Blvd

Cycle (sec):	100	Critical Vol./Cap.(X):	0.524
Loss Time (sec):	0 (Y+R=4.0 sec)	Average Delay (sec/veh):	12.8
Optimal Cycle:	0	Level Of Service:	B

Street Name:	Tracy Blvd						Larch Rd					
Approach:	North Bound			South Bound			East Bound			West Bound		
Movement:	L - T - R			L - T - R			L - T - R			L - T - R		
Control:	Stop Sign			Stop Sign			Stop Sign			Stop Sign		
Rights:	Include			Include			Include			Include		
Min. Green:	0	0	0	0	0	0	0	0	0	0	0	0
Lanes:	1 0 1	0 1		1 0	0 1	0	0 0	1! 0	0	0 1	0 0	1
Volume Module:												
Base Vol:	70	150	120	10	90	10	10	80	70	160	70	20
Growth Adj:	1.00	1.00	1.00	1.00	1.00	1.00	1.00	1.00	1.00	1.00	1.00	1.00
Initial Bse:	70	150	120	10	90	10	10	80	70	160	70	20
Added Vol:	0	0	0	0	0	0	0	0	0	0	0	0
PasserByVol:	0	0	0	0	0	0	0	0	0	0	0	0
Initial Fut:	70	150	120	10	90	10	10	80	70	160	70	20
User Adj:	1.00	1.00	1.00	1.00	1.00	1.00	1.00	1.00	1.00	1.00	1.00	1.00
PHF Adj:	0.85	0.85	0.85	0.85	0.85	0.85	0.85	0.85	0.85	0.85	0.85	0.85
PHF Volume:	82	176	141	12	106	12	12	94	82	188	82	24
Reduct Vol:	0	0	0	0	0	0	0	0	0	0	0	0
Reduced Vol:	82	176	141	12	106	12	12	94	82	188	82	24
PCE Adj:	1.00	1.00	1.00	1.00	1.00	1.00	1.00	1.00	1.00	1.00	1.00	1.00
MLF Adj:	1.00	1.00	1.00	1.00	1.00	1.00	1.00	1.00	1.00	1.00	1.00	1.00
FinalVolume:	82	176	141	12	106	12	12	94	82	188	82	24
Saturation Flow Module:												
Adjustment:	1.00	1.00	1.00	1.00	1.00	1.00	1.00	1.00	1.00	1.00	1.00	1.00
Lanes:	1.00	1.00	1.00	1.00	0.90	0.10	0.06	0.50	0.44	0.70	0.30	1.00
Final Sat.:	483	519	576	456	445	49	34	271	237	359	157	601
Capacity Analysis Module:												
Vol/Sat:	0.17	0.34	0.25	0.03	0.24	0.24	0.35	0.35	0.35	0.52	0.52	0.04
Crit Moves:		****				****			****		****	
Delay/Veh:	11.3	12.6	10.5	10.2	11.4	11.4	12.4	12.4	12.4	16.2	16.2	8.6
Delay Adj:	1.00	1.00	1.00	1.00	1.00	1.00	1.00	1.00	1.00	1.00	1.00	1.00
AdjDel/Veh:	11.3	12.6	10.5	10.2	11.4	11.4	12.4	12.4	12.4	16.2	16.2	8.6
LOS by Move:	B	B	B	B	B	B	B	B	B	C	C	A
ApproachDel:		11.6			11.3			12.4			15.6	
Delay Adj:		1.00			1.00			1.00			1.00	
ApprAdjDel:		11.6			11.3			12.4			15.6	
LOS by Appr:		B			B			B			C	
AllWayAvgQ:	0.2	0.5	0.3	0.0	0.3	0.3	0.5	0.5	0.5	1.0	1.0	0.0

Note: Queue reported is the number of cars per lane.

Movement	EBL	EBT	EBR	WBL	WBT	WBR	NBL	NBT	NBR	SBL	SBT	SBR
Lane Configurations												
Volume (vph)	0	0	0	390	0	120	130	310	0	0	310	110
Ideal Flow (vphpl)	1900	1900	1900	1900	1900	1900	1900	1900	1900	1900	1900	1900
Total Lost time (s)					4.0	4.0	4.0	4.0			4.0	
Lane Util. Factor					1.00	1.00	1.00	0.95			0.95	
Frt					1.00	0.85	1.00	1.00			0.96	
Flt Protected					0.95	1.00	0.95	1.00			1.00	
Satd. Flow (prot)					1736	1553	1736	3471			3303	
Flt Permitted					0.95	1.00	0.95	1.00			1.00	
Satd. Flow (perm)					1736	1553	1736	3471			3303	
Peak-hour factor, PHF	0.94	0.94	0.94	0.94	0.94	0.94	0.94	0.94	0.94	0.94	0.94	0.94
Adj. Flow (vph)	0	0	0	415	0	128	138	330	0	0	330	117
RTOR Reduction (vph)	0	0	0	0	0	50	0	0	0	0	37	0
Lane Group Flow (vph)	0	0	0	0	415	78	138	330	0	0	410	0
Heavy Vehicles (%)	0%	0%	0%	4%	4%	4%	4%	4%	4%	5%	5%	5%
Turn Type				Perm		Perm	Prot					
Protected Phases					8		5	2			6	
Permitted Phases				8		8						
Actuated Green, G (s)					20.5	20.5	10.9	31.6			16.7	
Effective Green, g (s)					20.5	20.5	10.9	32.5			17.6	
Actuated g/C Ratio					0.34	0.34	0.18	0.53			0.29	
Clearance Time (s)					4.0	4.0	4.0	4.9			4.9	
Vehicle Extension (s)					3.0	3.0	3.0	3.0			3.0	
Lane Grp Cap (vph)					583	522	310	1849			953	
v/s Ratio Prot							c0.08	0.10			c0.12	
v/s Ratio Perm					0.24	0.05						
v/c Ratio					0.71	0.15	0.45	0.18			0.43	
Uniform Delay, d1					17.7	14.2	22.4	7.4			17.6	
Progression Factor					1.00	1.00	1.00	1.00			1.00	
Incremental Delay, d2					4.1	0.1	1.0	0.0			0.3	
Delay (s)					21.8	14.3	23.4	7.4			17.9	
Level of Service					C	B	C	A			B	
Approach Delay (s)		0.0			20.0			12.1			17.9	
Approach LOS		A			C			B			B	

Intersection Summary			
HCM Average Control Delay	16.8	HCM Level of Service	B
HCM Volume to Capacity ratio	0.55		
Actuated Cycle Length (s)	61.0	Sum of lost time (s)	12.0
Intersection Capacity Utilization	51.3%	ICU Level of Service	A
Analysis Period (min)	15		

c Critical Lane Group

Movement	EBL	EBT	EBR	WBL	WBT	WBR	NBL	NBT	NBR	SBL	SBT	SBR
Lane Configurations												
Volume (vph)	80	0	160	0	0	0	0	360	270	120	580	0
Ideal Flow (vphpl)	1900	1900	1900	1900	1900	1900	1900	1900	1900	1900	1900	1900
Total Lost time (s)		4.0	4.0					4.0		4.0	4.0	
Lane Util. Factor		1.00	1.00					0.95		1.00	0.95	
Frt		1.00	0.85					0.94		1.00	1.00	
Flt Protected		0.95	1.00					1.00		0.95	1.00	
Satd. Flow (prot)		1703	1524					3312		1752	3505	
Flt Permitted		0.95	1.00					1.00		0.95	1.00	
Satd. Flow (perm)		1703	1524					3312		1752	3505	
Peak-hour factor, PHF	0.95	0.95	0.95	0.95	0.95	0.95	0.95	0.95	0.95	0.95	0.95	0.95
Adj. Flow (vph)	84	0	168	0	0	0	0	379	284	126	611	0
RTOR Reduction (vph)	0	0	134	0	0	0	0	137	0	0	0	0
Lane Group Flow (vph)	0	84	34	0	0	0	0	526	0	126	611	0
Heavy Vehicles (%)	6%	6%	6%	0%	0%	0%	2%	2%	2%	3%	3%	3%
Turn Type	Perm		Perm							Prot		
Protected Phases		4						2		1	6	
Permitted Phases	4		4									
Actuated Green, G (s)		8.1	8.1					14.9		7.3	26.2	
Effective Green, g (s)		9.0	9.0					15.8		7.3	27.1	
Actuated g/C Ratio		0.20	0.20					0.36		0.17	0.61	
Clearance Time (s)		4.9	4.9					4.9		4.0	4.9	
Vehicle Extension (s)		3.0	3.0					3.0		3.0	3.0	
Lane Grp Cap (vph)		348	311					1187		290	2154	
v/s Ratio Prot								c0.16		c0.07	0.17	
v/s Ratio Perm		0.05	0.02									
v/c Ratio		0.24	0.11					0.44		0.43	0.28	
Uniform Delay, d1		14.7	14.3					10.8		16.5	4.0	
Progression Factor		1.00	1.00					1.00		1.00	1.00	
Incremental Delay, d2		0.4	0.2					0.3		1.0	0.1	
Delay (s)		15.1	14.4					11.1		17.6	4.0	
Level of Service		B	B					B		B	A	
Approach Delay (s)		14.6			0.0			11.1			6.4	
Approach LOS		B			A			B			A	

Intersection Summary			
HCM Average Control Delay	9.5	HCM Level of Service	A
HCM Volume to Capacity ratio	0.38		
Actuated Cycle Length (s)	44.1	Sum of lost time (s)	12.0
Intersection Capacity Utilization	51.3%	ICU Level of Service	A
Analysis Period (min)	15		

c Critical Lane Group

Movement	EBL	EBT	EBR	WBL	WBT	WBR	NBL	NBT	NBR	SBL	SBT	SBR
Lane Configurations												
Volume (vph)	220	580	160	140	410	140	210	470	180	160	540	170
Ideal Flow (vphpl)	1900	1900	1900	1900	1900	1900	1900	1900	1900	1900	1900	1900
Total Lost time (s)	4.0	4.0		4.0	4.0		4.0	4.0		4.0	4.0	
Lane Util. Factor	1.00	0.95		1.00	0.95		1.00	0.95		1.00	0.95	
Frt	1.00	0.97		1.00	0.96		1.00	0.96		1.00	0.96	
Flt Protected	0.95	1.00		0.95	1.00		0.95	1.00		0.95	1.00	
Satd. Flow (prot)	1805	3493		1787	3438		1787	3426		1787	3446	
Flt Permitted	0.95	1.00		0.95	1.00		0.95	1.00		0.95	1.00	
Satd. Flow (perm)	1805	3493		1787	3438		1787	3426		1787	3446	
Peak-hour factor, PHF	0.95	0.95	0.95	0.95	0.95	0.95	0.95	0.95	0.95	0.95	0.95	0.95
Adj. Flow (vph)	232	611	168	147	432	147	221	495	189	168	568	179
RTOR Reduction (vph)	0	26	0	0	35	0	0	35	0	0	28	0
Lane Group Flow (vph)	232	754	0	147	544	0	221	649	0	168	719	0
Heavy Vehicles (%)	0%	0%	0%	1%	1%	1%	1%	1%	1%	1%	1%	1%
Turn Type	Prot			Prot			Prot			Prot		
Protected Phases	5	2		1	6		3	8		7	4	
Permitted Phases												
Actuated Green, G (s)	15.0	23.0		11.3	19.3		14.8	30.8		12.4	28.4	
Effective Green, g (s)	15.5	24.0		11.8	20.3		15.3	31.3		12.9	28.9	
Actuated g/C Ratio	0.16	0.25		0.12	0.21		0.16	0.33		0.13	0.30	
Clearance Time (s)	4.5	5.0		4.5	5.0		4.5	4.5		4.5	4.5	
Vehicle Extension (s)	1.0	3.0		1.0	3.0		1.0	3.0		1.0	3.0	
Lane Grp Cap (vph)	291	873		220	727		285	1117		240	1037	
v/s Ratio Prot	c0.13	c0.22		0.08	0.16		c0.12	0.19		0.09	c0.21	
v/s Ratio Perm												
v/c Ratio	0.80	0.86		0.67	0.75		0.78	0.58		0.70	0.69	
Uniform Delay, d1	38.7	34.4		40.2	35.5		38.7	26.9		39.7	29.6	
Progression Factor	1.00	1.00		1.00	1.00		1.00	1.00		1.00	1.00	
Incremental Delay, d2	13.2	8.8		5.8	4.2		11.4	2.2		7.0	3.8	
Delay (s)	51.9	43.3		46.1	39.7		50.1	29.1		46.7	33.5	
Level of Service	D	D		D	D		D	C		D	C	
Approach Delay (s)		45.2			41.0			34.2			35.9	
Approach LOS		D			D			C			D	

Intersection Summary			
HCM Average Control Delay	39.2	HCM Level of Service	D
HCM Volume to Capacity ratio	0.78		
Actuated Cycle Length (s)	96.0	Sum of lost time (s)	16.0
Intersection Capacity Utilization	74.2%	ICU Level of Service	D
Analysis Period (min)	15		

c Critical Lane Group

Movement	EBL	EBT	EBR	WBL	WBT	WBR	NBL	NBT	NBR	SBL	SBT	SBR
Lane Configurations												
Volume (veh/h)	80	10	90	10	10	10	50	30	10	10	40	50
Sign Control		Stop			Stop			Free			Free	
Grade		0%			0%			0%			0%	
Peak Hour Factor	0.80	0.80	0.80	0.80	0.80	0.80	0.80	0.80	0.80	0.80	0.80	0.80
Hourly flow rate (vph)	100	12	112	12	12	12	62	38	12	12	50	62
Pedestrians												
Lane Width (ft)												
Walking Speed (ft/s)												
Percent Blockage												
Right turn flare (veh)												
Median type								None			None	
Median storage veh)												
Upstream signal (ft)												
pX, platoon unblocked												
vC, conflicting volume	294	281	81	394	306	44	112			50		
vC1, stage 1 conf vol												
vC2, stage 2 conf vol												
vCu, unblocked vol	294	281	81	394	306	44	112			50		
tC, single (s)	7.1	6.5	6.2	7.1	6.5	6.2	4.1			4.1		
tC, 2 stage (s)												
tF (s)	3.5	4.0	3.3	3.5	4.0	3.3	2.2			2.2		
p0 queue free %	84	98	89	97	98	99	96			99		
cM capacity (veh/h)	617	597	981	477	580	1032	1471			1563		

Direction, Lane #	EB 1	EB 2	WB 1	NB 1	SB 1
Volume Total	100	125	38	112	125
Volume Left	100	0	12	62	12
Volume Right	0	112	12	12	62
cSH	617	922	627	1471	1563
Volume to Capacity	0.16	0.14	0.06	0.04	0.01
Queue Length 95th (ft)	14	12	5	3	1
Control Delay (s)	12.0	9.5	11.1	4.3	0.8
Lane LOS	B	A	B	A	A
Approach Delay (s)	10.6		11.1	4.3	0.8
Approach LOS	B		B		

Intersection Summary			
Average Delay	6.8		
Intersection Capacity Utilization	29.4%	ICU Level of Service	A
Analysis Period (min)	15		

Movement	EBL	EBT	EBR	WBL	WBT	WBR	NBL	NBT	NBR	SBL	SBT	SBR
Lane Configurations												
Volume (vph)	100	650	90	50	420	60	100	130	50	120	140	80
Ideal Flow (vphpl)	1900	1900	1900	1900	1900	1900	1900	1900	1900	1900	1900	1900
Total Lost time (s)	4.0	4.0		4.0	4.0		4.0	4.0	4.0	4.0	4.0	4.0
Lane Util. Factor	1.00	0.95		1.00	0.95		1.00	1.00	1.00	1.00	1.00	1.00
Frt	1.00	0.98		1.00	0.98		1.00	1.00	0.85	1.00	1.00	0.85
Flt Protected	0.95	1.00		0.95	1.00		0.95	1.00	1.00	0.95	1.00	1.00
Satd. Flow (prot)	1805	3544		1805	3542		1805	1900	1615	1805	1900	1615
Flt Permitted	0.95	1.00		0.95	1.00		0.95	1.00	1.00	0.95	1.00	1.00
Satd. Flow (perm)	1805	3544		1805	3542		1805	1900	1615	1805	1900	1615
Peak-hour factor, PHF	0.91	0.91	0.91	0.91	0.91	0.91	0.91	0.91	0.91	0.91	0.91	0.91
Adj. Flow (vph)	110	714	99	55	462	66	110	143	55	132	154	88
RTOR Reduction (vph)	0	9	0	0	11	0	0	0	48	0	0	76
Lane Group Flow (vph)	110	804	0	55	517	0	110	143	7	132	154	12
Heavy Vehicles (%)	0%	0%	0%	0%	0%	0%	0%	0%	0%	0%	0%	0%
Turn Type	Prot			Prot			Prot		Perm	Prot		Perm
Protected Phases	1	6		5	2		3	8		7	4	
Permitted Phases									8			4
Actuated Green, G (s)	5.9	24.2		3.3	21.6		5.9	7.3	7.3	6.4	7.8	7.8
Effective Green, g (s)	6.4	24.7		3.8	22.1		6.4	7.8	7.8	6.9	8.3	8.3
Actuated g/C Ratio	0.11	0.42		0.06	0.37		0.11	0.13	0.13	0.12	0.14	0.14
Clearance Time (s)	4.5	4.5		4.5	4.5		4.5	4.5	4.5	4.5	4.5	4.5
Vehicle Extension (s)	1.0	3.0		1.0	3.0		1.0	2.0	2.0	1.0	2.0	2.0
Lane Grp Cap (vph)	195	1479		116	1322		195	250	213	210	266	226
v/s Ratio Prot	c0.06	c0.23		0.03	0.15		0.06	0.08		c0.07	c0.08	
v/s Ratio Perm									0.00			0.01
v/c Ratio	0.56	0.54		0.47	0.39		0.56	0.57	0.03	0.63	0.58	0.05
Uniform Delay, d1	25.1	13.0		26.7	13.6		25.1	24.1	22.4	24.9	23.8	22.1
Progression Factor	1.00	1.00		1.00	1.00		1.00	1.00	1.00	1.00	1.00	1.00
Incremental Delay, d2	2.2	0.4		1.1	0.2		2.2	2.0	0.0	4.2	1.9	0.0
Delay (s)	27.3	13.4		27.8	13.8		27.3	26.1	22.4	29.1	25.7	22.1
Level of Service	C	B		C	B		C	C	C	C	C	C
Approach Delay (s)		15.1			15.1			25.9			26.1	
Approach LOS		B			B			C			C	

Intersection Summary			
HCM Average Control Delay	18.5	HCM Level of Service	B
HCM Volume to Capacity ratio	0.54		
Actuated Cycle Length (s)	59.2	Sum of lost time (s)	12.0
Intersection Capacity Utilization	52.7%	ICU Level of Service	A
Analysis Period (min)	15		

c Critical Lane Group

Movement	EBL	EBT	EBR	WBL	WBT	WBR	NBL	NBT	NBR	SBL	SBT	SBR
Lane Configurations												
Volume (vph)	480	830	760	350	390	240	260	980	170	290	810	90
Ideal Flow (vphpl)	1900	1900	1900	1900	1900	1900	1900	1900	1900	1900	1900	1900
Total Lost time (s)	4.0	4.0	4.0	4.0	4.0	4.0	4.0	4.0	4.0	4.0	4.0	4.0
Lane Util. Factor	0.97	0.91	1.00	0.97	0.91	1.00	0.97	0.95	1.00	0.97	0.95	1.00
Frt	1.00	1.00	0.85	1.00	1.00	0.85	1.00	1.00	0.85	1.00	1.00	0.85
Flt Protected	0.95	1.00	1.00	0.95	1.00	1.00	0.95	1.00	1.00	0.95	1.00	1.00
Satd. Flow (prot)	3502	5187	1615	3502	5187	1615	3502	3610	1615	3502	3610	1615
Flt Permitted	0.95	1.00	1.00	0.95	1.00	1.00	0.95	1.00	1.00	0.95	1.00	1.00
Satd. Flow (perm)	3502	5187	1615	3502	5187	1615	3502	3610	1615	3502	3610	1615
Peak-hour factor, PHF	0.96	0.96	0.96	0.96	0.96	0.96	0.96	0.96	0.96	0.96	0.96	0.96
Adj. Flow (vph)	500	865	792	365	406	250	271	1021	177	302	844	94
RTOR Reduction (vph)	0	0	0	0	0	195	0	0	56	0	0	38
Lane Group Flow (vph)	500	865	792	365	406	55	271	1021	121	302	844	56
Heavy Vehicles (%)	0%	0%	0%	0%	0%	0%	0%	0%	0%	0%	0%	0%
Turn Type	Prot		Free	Prot		Perm	Prot		Perm	Prot		Perm
Protected Phases	5	2		1	6		7	4		3	8	
Permitted Phases			Free			6			4			8
Actuated Green, G (s)	19.0	28.3	130.0	17.5	26.8	26.8	15.2	46.1	46.1	16.1	47.0	47.0
Effective Green, g (s)	20.0	30.3	130.0	18.5	28.8	28.8	16.2	48.1	48.1	17.1	49.0	49.0
Actuated g/C Ratio	0.15	0.23	1.00	0.14	0.22	0.22	0.12	0.37	0.37	0.13	0.38	0.38
Clearance Time (s)	5.0	6.0		5.0	6.0	6.0	5.0	6.0	6.0	5.0	6.0	6.0
Vehicle Extension (s)	3.0	3.0		3.0	3.0	3.0	3.0	3.0	3.0	3.0	3.0	3.0
Lane Grp Cap (vph)	539	1209	1615	498	1149	358	436	1336	598	461	1361	609
v/s Ratio Prot	c0.14	c0.17		0.10	0.08		0.08	c0.28		c0.09	0.23	
v/s Ratio Perm			c0.49			0.03			0.07			0.03
v/c Ratio	0.93	0.72	0.49	0.73	0.35	0.15	0.62	0.76	0.20	0.66	0.62	0.09
Uniform Delay, d1	54.3	45.9	0.0	53.4	42.7	40.8	54.0	36.0	27.9	53.6	32.9	26.1
Progression Factor	1.00	1.00	1.00	1.00	1.00	1.00	1.00	1.00	1.00	1.00	1.00	1.00
Incremental Delay, d2	22.2	2.0	1.1	5.5	0.2	0.2	2.7	4.2	0.8	3.3	2.1	0.3
Delay (s)	76.5	47.9	1.1	58.9	42.9	41.0	56.7	40.2	28.6	57.0	35.1	26.4
Level of Service	E	D	A	E	D	D	E	D	C	E	D	C
Approach Delay (s)		37.3			48.2			41.8			39.8	
Approach LOS		D			D			D			D	

Intersection Summary			
HCM Average Control Delay	40.8	HCM Level of Service	D
HCM Volume to Capacity ratio	0.76		
Actuated Cycle Length (s)	130.0	Sum of lost time (s)	12.0
Intersection Capacity Utilization	74.7%	ICU Level of Service	D
Analysis Period (min)	15		

c Critical Lane Group

Movement	EBL	EBT	EBR	WBL	WBT	WBR	NBL	NBT	NBR	SBL	SBT	SBR
Lane Configurations												
Volume (vph)	200	640	370	250	540	160	270	520	100	200	620	320
Ideal Flow (vphpl)	1900	1900	1900	1900	1900	1900	1900	1900	1900	1900	1900	1900
Total Lost time (s)	4.0	4.0	4.0	4.0	4.0	4.0	4.0	4.0	4.0	4.0	4.0	4.0
Lane Util. Factor	0.97	0.95	1.00	0.97	0.95	1.00	0.97	0.95	1.00	0.97	0.95	1.00
Frt	1.00	1.00	0.85	1.00	1.00	0.85	1.00	1.00	0.85	1.00	1.00	0.85
Flt Protected	0.95	1.00	1.00	0.95	1.00	1.00	0.95	1.00	1.00	0.95	1.00	1.00
Satd. Flow (prot)	3502	3610	1615	3502	3610	1615	3502	3610	1615	3502	3610	1615
Flt Permitted	0.95	1.00	1.00	0.95	1.00	1.00	0.95	1.00	1.00	0.95	1.00	1.00
Satd. Flow (perm)	3502	3610	1615	3502	3610	1615	3502	3610	1615	3502	3610	1615
Peak-hour factor, PHF	0.96	0.96	0.96	0.96	0.96	0.96	0.96	0.96	0.96	0.96	0.96	0.96
Adj. Flow (vph)	208	667	385	260	562	167	281	542	104	208	646	333
RTOR Reduction (vph)	0	0	176	0	0	79	0	0	67	0	0	111
Lane Group Flow (vph)	208	667	209	260	562	88	281	542	37	208	646	222
Heavy Vehicles (%)	0%	0%	0%	0%	0%	0%	0%	0%	0%	0%	0%	0%
Turn Type	Prot		Perm	Prot		Perm	Prot		Perm	Prot		Perm
Protected Phases	5	2		1	6		3	8		7	4	
Permitted Phases			2			6			8			4
Actuated Green, G (s)	10.9	41.0	41.0	12.5	42.6	42.6	12.8	25.6	25.6	10.9	23.7	23.7
Effective Green, g (s)	11.4	42.5	42.5	13.0	44.1	44.1	13.3	27.1	27.1	11.4	25.2	25.2
Actuated g/C Ratio	0.10	0.39	0.39	0.12	0.40	0.40	0.12	0.25	0.25	0.10	0.23	0.23
Clearance Time (s)	4.5	5.5	5.5	4.5	5.5	5.5	4.5	5.5	5.5	4.5	5.5	5.5
Vehicle Extension (s)	2.0	2.5	2.5	2.0	2.5	2.5	2.0	2.0	2.0	2.0	2.0	2.0
Lane Grp Cap (vph)	363	1395	624	414	1447	647	423	889	398	363	827	370
v/s Ratio Prot	0.06	c0.18		c0.07	0.16		c0.08	0.15		0.06	c0.18	
v/s Ratio Perm			0.13			0.05			0.02			0.14
v/c Ratio	0.57	0.48	0.33	0.63	0.39	0.14	0.66	0.61	0.09	0.57	0.78	0.60
Uniform Delay, d1	47.0	25.4	23.8	46.2	23.4	20.9	46.2	36.8	32.0	47.0	39.8	37.9
Progression Factor	1.00	1.00	1.00	1.00	1.00	1.00	1.00	1.00	1.00	1.00	1.00	1.00
Incremental Delay, d2	1.4	1.2	1.4	2.1	0.8	0.4	3.0	0.8	0.0	1.4	4.5	1.7
Delay (s)	48.3	26.6	25.2	48.3	24.2	21.3	49.3	37.6	32.0	48.3	44.3	39.6
Level of Service	D	C	C	D	C	C	D	D	C	D	D	D
Approach Delay (s)		29.8			30.0			40.5			43.7	
Approach LOS		C			C			D			D	

Intersection Summary			
HCM Average Control Delay	35.9	HCM Level of Service	D
HCM Volume to Capacity ratio	0.60		
Actuated Cycle Length (s)	110.0	Sum of lost time (s)	16.0
Intersection Capacity Utilization	63.0%	ICU Level of Service	B
Analysis Period (min)	15		

c Critical Lane Group

Movement	EBL	EBT	EBR	WBL	WBT	WBR	NBL	NBT	NBR	SBL	SBT	SBR
Lane Configurations												
Volume (vph)	80	590	110	80	560	40	130	140	50	80	130	100
Ideal Flow (vphpl)	1900	1900	1900	1900	1900	1900	1900	1900	1900	1900	1900	1900
Total Lost time (s)	4.0	4.0		4.0	4.0		4.0	4.0		4.0	4.0	4.0
Lane Util. Factor	1.00	0.95		1.00	0.95		1.00	1.00		1.00	1.00	1.00
Frt	1.00	0.98		1.00	0.99		1.00	0.96		1.00	1.00	0.85
Flt Protected	0.95	1.00		0.95	1.00		0.95	1.00		0.95	1.00	1.00
Satd. Flow (prot)	1787	3490		1805	3574		1787	1807		1770	1863	1583
Flt Permitted	0.95	1.00		0.95	1.00		0.95	1.00		0.95	1.00	1.00
Satd. Flow (perm)	1787	3490		1805	3574		1787	1807		1770	1863	1583
Peak-hour factor, PHF	0.88	0.88	0.88	0.88	0.88	0.88	0.88	0.88	0.88	0.88	0.88	0.88
Adj. Flow (vph)	91	670	125	91	636	45	148	159	57	91	148	114
RTOR Reduction (vph)	0	11	0	0	4	0	0	16	0	0	0	96
Lane Group Flow (vph)	91	784	0	91	677	0	148	200	0	91	148	18
Heavy Vehicles (%)	1%	1%	1%	0%	0%	0%	1%	1%	1%	2%	2%	2%
Turn Type	Prot			Prot			Prot			Prot		Perm
Protected Phases	1	6		5	2		3	8		7	4	
Permitted Phases												4
Actuated Green, G (s)	7.6	46.3		7.6	46.3		12.3	16.9		8.2	12.8	12.8
Effective Green, g (s)	7.6	46.8		7.6	46.8		12.3	17.4		8.2	13.3	13.3
Actuated g/C Ratio	0.08	0.49		0.08	0.49		0.13	0.18		0.09	0.14	0.14
Clearance Time (s)	4.0	4.5		4.0	4.5		4.0	4.5		4.0	4.5	4.5
Vehicle Extension (s)	2.0	5.0		2.0	3.0		2.0	2.0		2.0	2.0	2.0
Lane Grp Cap (vph)	141	1701		143	1742		229	328		151	258	219
v/s Ratio Prot	c0.05	c0.22		0.05	0.19		c0.08	c0.11		0.05	0.08	
v/s Ratio Perm												0.01
v/c Ratio	0.65	0.46		0.64	0.39		0.65	0.61		0.60	0.57	0.08
Uniform Delay, d1	42.9	16.3		42.9	15.6		39.8	36.2		42.3	38.7	36.0
Progression Factor	1.00	1.00		1.00	1.00		1.00	1.00		1.00	1.00	1.00
Incremental Delay, d2	7.4	0.9		6.6	0.7		4.6	2.4		4.6	1.9	0.1
Delay (s)	50.3	17.2		49.5	16.2		44.4	38.6		46.9	40.6	36.1
Level of Service	D	B		D	B		D	D		D	D	D
Approach Delay (s)		20.6			20.1			40.9			40.8	
Approach LOS		C			C			D			D	

Intersection Summary			
HCM Average Control Delay	26.5	HCM Level of Service	C
HCM Volume to Capacity ratio	0.52		
Actuated Cycle Length (s)	96.0	Sum of lost time (s)	12.0
Intersection Capacity Utilization	52.4%	ICU Level of Service	A
Analysis Period (min)	15		

c Critical Lane Group

Movement	EBL	EBT	EBR	WBL	WBT	WBR	NBL	NBT	NBR	SBL	SBT	SBR
Lane Configurations												
Volume (veh/h)	20	40	50	90	20	30	20	40	70	10	50	10
Sign Control		Stop			Stop			Free			Free	
Grade		0%			0%			0%			0%	
Peak Hour Factor	0.90	0.90	0.90	0.90	0.90	0.90	0.90	0.90	0.90	0.90	0.90	0.90
Hourly flow rate (vph)	22	44	56	100	22	33	22	44	78	11	56	11
Pedestrians												
Lane Width (ft)												
Walking Speed (ft/s)												
Percent Blockage												
Right turn flare (veh)												
Median type								None			None	
Median storage veh)												
Upstream signal (ft)												
pX, platoon unblocked												
vC, conflicting volume	256	250	61	289	217	83	67			122		
vC1, stage 1 conf vol												
vC2, stage 2 conf vol												
vCu, unblocked vol	256	250	61	289	217	83	67			122		
tC, single (s)	7.1	6.5	6.2	7.1	6.5	6.2	4.1			4.1		
tC, 2 stage (s)												
tF (s)	3.5	4.0	3.3	3.5	4.0	3.3	2.2			2.2		
p0 queue free %	97	93	94	83	97	97	99			99		
cM capacity (veh/h)	650	642	1010	587	670	982	1535			1465		

Direction, Lane #	EB 1	WB 1	NB 1	SB 1
Volume Total	122	156	144	78
Volume Left	22	100	22	11
Volume Right	56	33	78	11
cSH	771	655	1535	1465
Volume to Capacity	0.16	0.24	0.01	0.01
Queue Length 95th (ft)	14	23	1	1
Control Delay (s)	10.5	12.2	1.2	1.1
Lane LOS	B	B	A	A
Approach Delay (s)	10.5	12.2	1.2	1.1
Approach LOS	B	B		

Intersection Summary			
Average Delay	6.9		
Intersection Capacity Utilization	31.5%	ICU Level of Service	A
Analysis Period (min)	15		

Movement	EBL	EBR	NBL	NBT	SBT	SBR
Lane Configurations						
Volume (vph)	50	680	550	80	100	80
Ideal Flow (vphpl)	1900	1900	1900	1900	1900	1900
Total Lost time (s)	4.0	4.0	4.0	4.0	4.0	
Lane Util. Factor	1.00	1.00	1.00	1.00	1.00	
Frt	1.00	0.85	1.00	1.00	0.94	
Flt Protected	0.95	1.00	0.95	1.00	1.00	
Satd. Flow (prot)	1787	1599	1805	1900	1768	
Flt Permitted	0.95	1.00	0.95	1.00	1.00	
Satd. Flow (perm)	1787	1599	1805	1900	1768	
Peak-hour factor, PHF	0.98	0.98	0.98	0.98	0.98	0.98
Adj. Flow (vph)	51	694	561	82	102	82
RTOR Reduction (vph)	0	577	0	0	50	0
Lane Group Flow (vph)	51	117	561	82	134	0
Heavy Vehicles (%)	1%	1%	0%	0%	1%	1%
Turn Type		Perm	Prot			
Protected Phases	2		3	8	4	
Permitted Phases		2				
Actuated Green, G (s)	8.5	8.5	20.3	33.6	8.8	
Effective Green, g (s)	8.5	8.5	20.8	34.1	9.3	
Actuated g/C Ratio	0.17	0.17	0.41	0.67	0.18	
Clearance Time (s)	4.0	4.0	4.5	4.5	4.5	
Vehicle Extension (s)	2.0	2.0	2.0	2.5	2.5	
Lane Grp Cap (vph)	300	269	742	1280	325	
v/s Ratio Prot	0.03		c0.31	0.04	c0.08	
v/s Ratio Perm		c0.07				
v/c Ratio	0.17	0.43	0.76	0.06	0.41	
Uniform Delay, d1	18.0	18.9	12.7	2.8	18.2	
Progression Factor	1.00	1.00	1.00	1.00	1.00	
Incremental Delay, d2	0.1	0.4	3.9	0.0	0.6	
Delay (s)	18.1	19.3	16.7	2.8	18.9	
Level of Service	B	B	B	A	B	
Approach Delay (s)	19.2			14.9	18.9	
Approach LOS	B			B	B	

Intersection Summary			
HCM Average Control Delay	17.4	HCM Level of Service	B
HCM Volume to Capacity ratio	0.60		
Actuated Cycle Length (s)	50.6	Sum of lost time (s)	12.0
Intersection Capacity Utilization	58.9%	ICU Level of Service	B
Analysis Period (min)	15		

c Critical Lane Group

Movement	EBL	EBT	EBR	WBL	WBT	WBR	NBL	NBT	NBR	SBL	SBT	SBR
Lane Configurations												
Volume (vph)	100	550	560	200	420	130	530	420	160	190	500	100
Ideal Flow (vphpl)	1900	1900	1900	1900	1900	1900	1900	1900	1900	1900	1900	1900
Total Lost time (s)	4.0	4.0	4.0	4.0	4.0		4.0	4.0	4.0	4.0	4.0	
Lane Util. Factor	1.00	0.95	1.00	1.00	0.95		0.94	0.95	1.00	1.00	0.95	
Frt	1.00	1.00	0.85	1.00	0.96		1.00	1.00	0.85	1.00	0.97	
Flt Protected	0.95	1.00	1.00	0.95	1.00		0.95	1.00	1.00	0.95	1.00	
Satd. Flow (prot)	1805	3610	1615	1805	3482		5090	3610	1615	1787	3485	
Flt Permitted	0.95	1.00	1.00	0.95	1.00		0.95	1.00	1.00	0.95	1.00	
Satd. Flow (perm)	1805	3610	1615	1805	3482		5090	3610	1615	1787	3485	
Peak-hour factor, PHF	0.97	0.97	0.97	0.97	0.97	0.97	0.97	0.97	0.97	0.97	0.97	0.97
Adj. Flow (vph)	103	567	577	206	433	134	546	433	165	196	515	103
RTOR Reduction (vph)	0	0	343	0	31	0	0	0	130	0	19	0
Lane Group Flow (vph)	103	567	234	206	536	0	546	433	35	196	599	0
Heavy Vehicles (%)	0%	0%	0%	0%	0%	0%	0%	0%	0%	1%	1%	1%
Turn Type	Prot		Perm	Prot			Prot		Perm	Prot		
Protected Phases	7	4		3	8		5	2		1	6	
Permitted Phases			4						2			
Actuated Green, G (s)	7.8	19.3	19.3	12.4	23.9		12.7	15.6	15.6	12.2	15.1	
Effective Green, g (s)	9.3	20.8	20.8	13.9	25.4		14.2	17.1	17.1	13.7	16.6	
Actuated g/C Ratio	0.11	0.26	0.26	0.17	0.31		0.17	0.21	0.21	0.17	0.20	
Clearance Time (s)	5.5	5.5	5.5	5.5	5.5		5.5	5.5	5.5	5.5	5.5	
Vehicle Extension (s)	2.0	3.0	3.0	2.0	3.0		2.0	3.0	3.0	2.0	3.0	
Lane Grp Cap (vph)	206	921	412	308	1085		887	757	339	300	710	
v/s Ratio Prot	0.06	c0.16		c0.11	0.15		0.11	0.12		c0.11	c0.17	
v/s Ratio Perm			0.14						0.02			
v/c Ratio	0.50	0.62	0.57	0.67	0.49		0.62	0.57	0.10	0.65	0.84	
Uniform Delay, d1	33.9	26.8	26.4	31.6	22.8		31.1	28.9	26.0	31.7	31.2	
Progression Factor	1.00	1.00	1.00	1.00	1.00		1.00	1.00	1.00	1.00	1.00	
Incremental Delay, d2	0.7	1.2	1.8	4.2	0.4		0.9	1.0	0.1	3.9	9.0	
Delay (s)	34.6	28.0	28.2	35.9	23.2		32.0	30.0	26.1	35.5	40.2	
Level of Service	C	C	C	D	C		C	C	C	D	D	
Approach Delay (s)		28.7			26.6			30.4			39.1	
Approach LOS		C			C			C			D	

Intersection Summary			
HCM Average Control Delay	30.9	HCM Level of Service	C
HCM Volume to Capacity ratio	0.69		
Actuated Cycle Length (s)	81.5	Sum of lost time (s)	16.0
Intersection Capacity Utilization	72.8%	ICU Level of Service	C
Analysis Period (min)	15		

c Critical Lane Group

Level Of Service Computation Report
2000 HCM 4-Way Stop Method (Future Volume Alternative)

****

Intersection #4 Larch Rd/Tracy Blvd

****

Cycle (sec):	100	Critical Vol./Cap.(X):	0.323
Loss Time (sec):	0 (Y+R=4.0 sec)	Average Delay (sec/veh):	10.6
Optimal Cycle:	0	Level Of Service:	B

****

Street Name:	Tracy Blvd							Larch Rd					
Approach:	North Bound			South Bound			East Bound			West Bound			
Movement:	L - T - R			L - T - R			L - T - R			L - T - R			
Control:	Stop Sign			Stop Sign			Stop Sign			Stop Sign			
Rights:	Include			Include			Include			Include			
Min. Green:	0	0	0	0	0	0	0	0	0	0	0	0	
Lanes:	1 0 1 0 1			1 0 0 1 0			0 0 1! 0 0			0 1 0 0 1			
Volume Module:													
Base Vol:	90	120	70	10	90	10	10	50	70	100	50	10	
Growth Adj:	1.00	1.00	1.00	1.00	1.00	1.00	1.00	1.00	1.00	1.00	1.00	1.00	
Initial Bse:	90	120	70	10	90	10	10	50	70	100	50	10	
Added Vol:	0	0	0	0	0	0	0	0	0	0	0	0	
PasserByVol:	0	0	0	0	0	0	0	0	0	0	0	0	
Initial Fut:	90	120	70	10	90	10	10	50	70	100	50	10	
User Adj:	1.00	1.00	1.00	1.00	1.00	1.00	1.00	1.00	1.00	1.00	1.00	1.00	
PHF Adj:	0.86	0.86	0.86	0.86	0.86	0.86	0.86	0.86	0.86	0.86	0.86	0.86	
PHF Volume:	105	140	81	12	105	12	12	58	81	116	58	12	
Reduct Vol:	0	0	0	0	0	0	0	0	0	0	0	0	
Reduced Vol:	105	140	81	12	105	12	12	58	81	116	58	12	
PCE Adj:	1.00	1.00	1.00	1.00	1.00	1.00	1.00	1.00	1.00	1.00	1.00	1.00	
MLF Adj:	1.00	1.00	1.00	1.00	1.00	1.00	1.00	1.00	1.00	1.00	1.00	1.00	
FinalVolume:	105	140	81	12	105	12	12	58	81	116	58	12	
Saturation Flow Module:													
Adjustment:	1.00	1.00	1.00	1.00	1.00	1.00	1.00	1.00	1.00	1.00	1.00	1.00	
Lanes:	1.00	1.00	1.00	1.00	0.90	0.10	0.08	0.38	0.54	0.67	0.33	1.00	
Final Sat.:	527	569	639	510	502	56	46	228	319	360	180	636	
Capacity Analysis Module:													
Vol/Sat:	0.20	0.25	0.13	0.02	0.21	0.21	0.25	0.25	0.25	0.32	0.32	0.02	
Crit Moves:	****			****			****			****			
Delay/Veh:	10.8	10.7	8.8	9.5	10.3	10.3	10.6	10.6	10.6	11.9	11.9	8.1	
Delay Adj:	1.00	1.00	1.00	1.00	1.00	1.00	1.00	1.00	1.00	1.00	1.00	1.00	
AdjDel/Veh:	10.8	10.7	8.8	9.5	10.3	10.3	10.6	10.6	10.6	11.9	11.9	8.1	
LOS by Move:	B	B	A	A	B	B	B	B	B	B	B	A	
ApproachDel:	10.3			10.2			10.6			11.6			
Delay Adj:	1.00			1.00			1.00			1.00			
ApprAdjDel:	10.3			10.2			10.6			11.6			
LOS by Appr:	B			B			B			B			
AllWayAvgQ:	0.2	0.3	0.1	0.0	0.2	0.2	0.3	0.3	0.3	0.4	0.4	0.0	

****

Note: Queue reported is the number of cars per lane.

****

Movement	EBL	EBT	EBR	WBL	WBT	WBR	NBL	NBT	NBR	SBL	SBT	SBR
Lane Configurations												
Volume (vph)	0	0	0	350	0	110	210	270	0	0	280	110
Ideal Flow (vphpl)	1900	1900	1900	1900	1900	1900	1900	1900	1900	1900	1900	1900
Total Lost time (s)					4.0	4.0	4.0	4.0			4.0	
Lane Util. Factor					1.00	1.00	1.00	0.95			0.95	
Frt					1.00	0.85	1.00	1.00			0.96	
Flt Protected					0.95	1.00	0.95	1.00			1.00	
Satd. Flow (prot)					1787	1599	1787	3574			3423	
Flt Permitted					0.95	1.00	0.95	1.00			1.00	
Satd. Flow (perm)					1787	1599	1787	3574			3423	
Peak-hour factor, PHF	0.95	0.95	0.95	0.95	0.95	0.95	0.95	0.95	0.95	0.95	0.95	0.95
Adj. Flow (vph)	0	0	0	368	0	116	221	284	0	0	295	116
RTOR Reduction (vph)	0	0	0	0	0	54	0	0	0	0	44	0
Lane Group Flow (vph)	0	0	0	0	368	62	221	284	0	0	367	0
Heavy Vehicles (%)	0%	0%	0%	1%	1%	1%	1%	1%	1%	1%	1%	1%
Turn Type				Perm		Perm	Prot					
Protected Phases					8		5	2			6	
Permitted Phases				8		8						
Actuated Green, G (s)					18.5	18.5	13.7	33.8			16.1	
Effective Green, g (s)					18.5	18.5	13.7	34.7			17.0	
Actuated g/C Ratio					0.30	0.30	0.22	0.57			0.28	
Clearance Time (s)					4.0	4.0	4.0	4.9			4.9	
Vehicle Extension (s)					3.0	3.0	3.0	3.0			3.0	
Lane Grp Cap (vph)					540	483	400	2026			951	
v/s Ratio Prot							c0.12	0.08			c0.11	
v/s Ratio Perm					0.21	0.04						
v/c Ratio					0.68	0.13	0.55	0.14			0.39	
Uniform Delay, d1					18.8	15.5	21.0	6.2			17.9	
Progression Factor					1.00	1.00	1.00	1.00			1.00	
Incremental Delay, d2					3.5	0.1	1.7	0.0			0.3	
Delay (s)					22.3	15.6	22.7	6.3			18.1	
Level of Service					C	B	C	A			B	
Approach Delay (s)		0.0			20.7			13.5			18.1	
Approach LOS		A			C			B			B	

Intersection Summary			
HCM Average Control Delay	17.3	HCM Level of Service	B
HCM Volume to Capacity ratio	0.54		
Actuated Cycle Length (s)	61.2	Sum of lost time (s)	12.0
Intersection Capacity Utilization	53.5%	ICU Level of Service	A
Analysis Period (min)	15		

c Critical Lane Group

Movement	EBL	EBT	EBR	WBL	WBT	WBR	NBL	NBT	NBR	SBL	SBT	SBR
Lane Configurations												
Volume (vph)	90	0	190	0	0	0	0	390	300	100	530	0
Ideal Flow (vphpl)	1900	1900	1900	1900	1900	1900	1900	1900	1900	1900	1900	1900
Total Lost time (s)		4.0	4.0					4.0		4.0	4.0	
Lane Util. Factor		1.00	1.00					0.95		1.00	0.95	
Frt		1.00	0.85					0.93		1.00	1.00	
Flt Protected		0.95	1.00					1.00		0.95	1.00	
Satd. Flow (prot)		1787	1599					3341		1787	3574	
Flt Permitted		0.95	1.00					1.00		0.95	1.00	
Satd. Flow (perm)		1787	1599					3341		1787	3574	
Peak-hour factor, PHF	0.91	0.91	0.91	0.91	0.91	0.91	0.91	0.91	0.91	0.91	0.91	0.91
Adj. Flow (vph)	99	0	209	0	0	0	0	429	330	110	582	0
RTOR Reduction (vph)	0	0	164	0	0	0	0	138	0	0	0	0
Lane Group Flow (vph)	0	99	45	0	0	0	0	621	0	110	582	0
Heavy Vehicles (%)	1%	1%	1%	0%	0%	0%	1%	1%	1%	1%	1%	1%
Turn Type	Perm		Perm							Prot		
Protected Phases		4						2		1	6	
Permitted Phases	4		4									
Actuated Green, G (s)		8.7	8.7					15.6		6.9	26.5	
Effective Green, g (s)		9.6	9.6					16.5		6.9	27.4	
Actuated g/C Ratio		0.21	0.21					0.37		0.15	0.61	
Clearance Time (s)		4.9	4.9					4.9		4.0	4.9	
Vehicle Extension (s)		3.0	3.0					3.0		3.0	3.0	
Lane Grp Cap (vph)		381	341					1225		274	2176	
v/s Ratio Prot								c0.19		c0.06	0.16	
v/s Ratio Perm		0.06	0.03									
v/c Ratio		0.26	0.13					0.51		0.40	0.27	
Uniform Delay, d1		14.7	14.3					11.1		17.2	4.1	
Progression Factor		1.00	1.00					1.00		1.00	1.00	
Incremental Delay, d2		0.4	0.2					0.3		1.0	0.1	
Delay (s)		15.1	14.5					11.4		18.2	4.2	
Level of Service		B	B					B		B	A	
Approach Delay (s)		14.7			0.0			11.4			6.4	
Approach LOS		B			A			B			A	

Intersection Summary			
HCM Average Control Delay	10.0	HCM Level of Service	B
HCM Volume to Capacity ratio	0.41		
Actuated Cycle Length (s)	45.0	Sum of lost time (s)	12.0
Intersection Capacity Utilization	53.5%	ICU Level of Service	A
Analysis Period (min)	15		

c Critical Lane Group

Movement	EBL	EBT	EBR	WBL	WBT	WBR	NBL	NBT	NBR	SBL	SBT	SBR
Lane Configurations												
Volume (vph)	190	420	160	130	320	130	230	480	110	190	570	160
Ideal Flow (vphpl)	1900	1900	1900	1900	1900	1900	1900	1900	1900	1900	1900	1900
Total Lost time (s)	4.0	4.0		4.0	4.0		4.0	4.0		4.0	4.0	
Lane Util. Factor	1.00	0.95		1.00	0.95		1.00	0.95		1.00	0.95	
Frt	1.00	0.96		1.00	0.96		1.00	0.97		1.00	0.97	
Flt Protected	0.95	1.00		0.95	1.00		0.95	1.00		0.95	1.00	
Satd. Flow (prot)	1805	3461		1787	3419		1787	3475		1787	3457	
Flt Permitted	0.95	1.00		0.95	1.00		0.95	1.00		0.95	1.00	
Satd. Flow (perm)	1805	3461		1787	3419		1787	3475		1787	3457	
Peak-hour factor, PHF	0.97	0.97	0.97	0.97	0.97	0.97	0.97	0.97	0.97	0.97	0.97	0.97
Adj. Flow (vph)	196	433	165	134	330	134	237	495	113	196	588	165
RTOR Reduction (vph)	0	41	0	0	48	0	0	17	0	0	23	0
Lane Group Flow (vph)	196	557	0	134	416	0	237	591	0	196	730	0
Heavy Vehicles (%)	0%	0%	0%	1%	1%	1%	1%	1%	1%	1%	1%	1%
Turn Type	Prot			Prot			Prot			Prot		
Protected Phases	5	2		1	6		3	8		7	4	
Permitted Phases												
Actuated Green, G (s)	13.6	19.9		10.6	16.9		15.4	33.2		13.8	31.6	
Effective Green, g (s)	14.1	20.9		11.1	17.9		15.9	33.7		14.3	32.1	
Actuated g/C Ratio	0.15	0.22		0.12	0.19		0.17	0.35		0.15	0.33	
Clearance Time (s)	4.5	5.0		4.5	5.0		4.5	4.5		4.5	4.5	
Vehicle Extension (s)	1.0	3.0		1.0	3.0		1.0	3.0		1.0	3.0	
Lane Grp Cap (vph)	265	753		207	638		296	1220		266	1156	
v/s Ratio Prot	c0.11	c0.16		0.07	0.12		c0.13	0.17		0.11	c0.21	
v/s Ratio Perm												
v/c Ratio	0.74	0.74		0.65	0.65		0.80	0.48		0.74	0.63	
Uniform Delay, d1	39.2	35.0		40.6	36.2		38.5	24.4		39.1	27.0	
Progression Factor	1.00	1.00		1.00	1.00		1.00	1.00		1.00	1.00	
Incremental Delay, d2	9.0	3.8		5.1	2.4		13.6	1.4		8.8	2.6	
Delay (s)	48.2	38.8		45.7	38.6		52.1	25.7		47.9	29.6	
Level of Service	D	D		D	D		D	C		D	C	
Approach Delay (s)		41.1			40.2			33.1			33.4	
Approach LOS		D			D			C			C	

Intersection Summary			
HCM Average Control Delay	36.5	HCM Level of Service	D
HCM Volume to Capacity ratio	0.72		
Actuated Cycle Length (s)	96.0	Sum of lost time (s)	16.0
Intersection Capacity Utilization	70.9%	ICU Level of Service	C
Analysis Period (min)	15		

c Critical Lane Group

Movement	EBL	EBT	EBR	WBL	WBT	WBR	NBL	NBT	NBR	SBL	SBT	SBR
Lane Configurations												
Volume (veh/h)	40	10	50	10	10	10	40	30	10	10	40	20
Sign Control		Stop			Stop			Free			Free	
Grade		0%			0%			0%			0%	
Peak Hour Factor	0.94	0.94	0.94	0.94	0.94	0.94	0.94	0.94	0.94	0.94	0.94	0.94
Hourly flow rate (vph)	43	11	53	11	11	11	43	32	11	11	43	21
Pedestrians												
Lane Width (ft)												
Walking Speed (ft/s)												
Percent Blockage												
Right turn flare (veh)												
Median type								None			None	
Median storage veh)												
Upstream signal (ft)												
pX, platoon unblocked												
vC, conflicting volume	213	202	53	255	207	37	64			43		
vC1, stage 1 conf vol												
vC2, stage 2 conf vol												
vCu, unblocked vol	213	202	53	255	207	37	64			43		
tC, single (s)	7.1	6.5	6.2	7.1	6.5	6.2	4.1			4.1		
tC, 2 stage (s)												
tF (s)	3.5	4.0	3.3	3.5	4.0	3.3	2.2			2.2		
p0 queue free %	94	98	95	98	98	99	97			99		
cM capacity (veh/h)	711	672	1017	640	669	1041	1532			1573		

Direction, Lane #	EB 1	EB 2	WB 1	NB 1	SB 1
Volume Total	43	64	32	85	74
Volume Left	43	0	11	43	11
Volume Right	0	53	11	11	21
cSH	711	937	747	1532	1573
Volume to Capacity	0.06	0.07	0.04	0.03	0.01
Queue Length 95th (ft)	5	5	3	2	1
Control Delay (s)	10.4	9.1	10.0	3.8	1.1
Lane LOS	B	A	B	A	A
Approach Delay (s)	9.6		10.0	3.8	1.1
Approach LOS	A		B		

Intersection Summary			
Average Delay	5.9		
Intersection Capacity Utilization	26.1%	ICU Level of Service	A
Analysis Period (min)	15		

Movement	EBL	EBT	EBR	WBL	WBT	WBR	NBL	NBT	NBR	SBL	SBT	SBR
Lane Configurations												
Volume (vph)	60	500	110	40	390	50	80	80	30	90	120	70
Ideal Flow (vphpl)	1900	1900	1900	1900	1900	1900	1900	1900	1900	1900	1900	1900
Total Lost time (s)	4.0	4.0		4.0	4.0		4.0	4.0	4.0	4.0	4.0	4.0
Lane Util. Factor	1.00	0.95		1.00	0.95		1.00	1.00	1.00	1.00	1.00	1.00
Frt	1.00	0.97		1.00	0.98		1.00	1.00	0.85	1.00	1.00	0.85
Flt Protected	0.95	1.00		0.95	1.00		0.95	1.00	1.00	0.95	1.00	1.00
Satd. Flow (prot)	1805	3513		1805	3549		1805	1900	1615	1805	1900	1615
Flt Permitted	0.95	1.00		0.95	1.00		0.95	1.00	1.00	0.95	1.00	1.00
Satd. Flow (perm)	1805	3513		1805	3549		1805	1900	1615	1805	1900	1615
Peak-hour factor, PHF	0.87	0.87	0.87	0.87	0.87	0.87	0.87	0.87	0.87	0.87	0.87	0.87
Adj. Flow (vph)	69	575	126	46	448	57	92	92	34	103	138	80
RTOR Reduction (vph)	0	17	0	0	9	0	0	0	29	0	0	69
Lane Group Flow (vph)	69	684	0	46	496	0	92	92	5	103	138	11
Heavy Vehicles (%)	0%	0%	0%	0%	0%	0%	0%	0%	0%	0%	0%	0%
Turn Type	Prot			Prot			Prot		Perm	Prot		Perm
Protected Phases	1	6		5	2		3	8		7	4	
Permitted Phases									8			4
Actuated Green, G (s)	3.6	22.0		3.2	21.6		5.6	7.2	7.2	5.9	7.5	7.5
Effective Green, g (s)	4.1	22.5		3.7	22.1		6.1	7.7	7.7	6.4	8.0	8.0
Actuated g/C Ratio	0.07	0.40		0.07	0.39		0.11	0.14	0.14	0.11	0.14	0.14
Clearance Time (s)	4.5	4.5		4.5	4.5		4.5	4.5	4.5	4.5	4.5	4.5
Vehicle Extension (s)	1.0	3.0		1.0	3.0		1.0	2.0	2.0	1.0	2.0	2.0
Lane Grp Cap (vph)	131	1404		119	1393		196	260	221	205	270	229
v/s Ratio Prot	c0.04	c0.19		0.03	0.14		0.05	0.05		c0.06	c0.07	
v/s Ratio Perm									0.00			0.01
v/c Ratio	0.53	0.49		0.39	0.36		0.47	0.35	0.02	0.50	0.51	0.05
Uniform Delay, d1	25.2	12.6		25.2	12.1		23.6	22.0	21.0	23.5	22.3	20.9
Progression Factor	1.00	1.00		1.00	1.00		1.00	1.00	1.00	1.00	1.00	1.00
Incremental Delay, d2	1.8	0.3		0.8	0.2		0.6	0.3	0.0	0.7	0.7	0.0
Delay (s)	26.9	12.9		26.0	12.2		24.2	22.3	21.1	24.2	23.0	20.9
Level of Service	C	B		C	B		C	C	C	C	C	C
Approach Delay (s)		14.1			13.4			22.9			22.9	
Approach LOS		B			B			C			C	

Intersection Summary			
HCM Average Control Delay	16.4	HCM Level of Service	B
HCM Volume to Capacity ratio	0.42		
Actuated Cycle Length (s)	56.3	Sum of lost time (s)	8.0
Intersection Capacity Utilization	44.0%	ICU Level of Service	A
Analysis Period (min)	15		

c Critical Lane Group

Movement	EBL	EBT	EBR	WBL	WBT	WBR	NBL	NBT	NBR	SBL	SBT	SBR
Lane Configurations												
Volume (vph)	410	590	300	310	480	320	580	1130	180	300	1020	150
Ideal Flow (vphpl)	1900	1900	1900	1900	1900	1900	1900	1900	1900	1900	1900	1900
Total Lost time (s)	4.0	4.0	4.0	4.0	4.0	4.0	4.0	4.0	4.0	4.0	4.0	4.0
Lane Util. Factor	0.97	0.91	1.00	0.97	0.91	1.00	0.97	0.95	1.00	0.97	0.95	1.00
Frt	1.00	1.00	0.85	1.00	1.00	0.85	1.00	1.00	0.85	1.00	1.00	0.85
Flt Protected	0.95	1.00	1.00	0.95	1.00	1.00	0.95	1.00	1.00	0.95	1.00	1.00
Satd. Flow (prot)	3502	5187	1615	3502	5187	1615	3502	3610	1615	3502	3610	1615
Flt Permitted	0.95	1.00	1.00	0.95	1.00	1.00	0.95	1.00	1.00	0.95	1.00	1.00
Satd. Flow (perm)	3502	5187	1615	3502	5187	1615	3502	3610	1615	3502	3610	1615
Peak-hour factor, PHF	0.97	0.97	0.97	0.97	0.97	0.97	0.97	0.97	0.97	0.97	0.97	0.97
Adj. Flow (vph)	423	608	309	320	495	330	598	1165	186	309	1052	155
RTOR Reduction (vph)	0	0	0	0	0	226	0	0	63	0	0	63
Lane Group Flow (vph)	423	608	309	320	495	104	598	1165	123	309	1052	92
Heavy Vehicles (%)	0%	0%	0%	0%	0%	0%	0%	0%	0%	0%	0%	0%
Turn Type	Prot		Free	Prot		Perm	Prot		Perm	Prot		Perm
Protected Phases	5	2		1	6		7	4		3	8	
Permitted Phases			Free			6			4			8
Actuated Green, G (s)	14.6	17.8	98.2	13.3	16.5	16.5	15.0	31.9	31.9	13.2	30.1	30.1
Effective Green, g (s)	15.6	19.8	98.2	14.3	18.5	18.5	16.0	33.9	33.9	14.2	32.1	32.1
Actuated g/C Ratio	0.16	0.20	1.00	0.15	0.19	0.19	0.16	0.35	0.35	0.14	0.33	0.33
Clearance Time (s)	5.0	6.0		5.0	6.0	6.0	5.0	6.0	6.0	5.0	6.0	6.0
Vehicle Extension (s)	3.0	3.0		3.0	3.0	3.0	3.0	3.0	3.0	3.0	3.0	3.0
Lane Grp Cap (vph)	556	1046	1615	510	977	304	571	1246	558	506	1180	528
v/s Ratio Prot	c0.12	c0.12		0.09	0.10		c0.17	c0.32		0.09	0.29	
v/s Ratio Perm			c0.19			0.06			0.08			0.06
v/c Ratio	0.76	0.58	0.19	0.63	0.51	0.34	1.05	0.93	0.22	0.61	0.89	0.18
Uniform Delay, d1	39.5	35.5	0.0	39.4	35.8	34.6	41.1	31.1	22.8	39.4	31.4	23.6
Progression Factor	1.00	1.00	1.00	1.00	1.00	1.00	1.00	1.00	1.00	1.00	1.00	1.00
Incremental Delay, d2	6.1	0.8	0.3	2.4	0.4	0.7	50.6	12.8	0.2	2.2	8.8	0.2
Delay (s)	45.6	36.3	0.3	41.9	36.2	35.2	91.7	43.9	23.0	41.6	40.2	23.8
Level of Service	D	D	A	D	D	D	F	D	C	D	D	C
Approach Delay (s)		30.9			37.5			56.6			38.8	
Approach LOS		C			D			E			D	

Intersection Summary			
HCM Average Control Delay	42.6	HCM Level of Service	D
HCM Volume to Capacity ratio	0.80		
Actuated Cycle Length (s)	98.2	Sum of lost time (s)	8.0
Intersection Capacity Utilization	79.0%	ICU Level of Service	D
Analysis Period (min)	15		

c Critical Lane Group

Movement	EBL	EBT	EBR	WBL	WBT	WBR	NBL	NBT	NBR	SBL	SBT	SBR
Lane Configurations												
Volume (vph)	190	560	330	130	520	130	290	370	90	110	400	170
Ideal Flow (vphpl)	1900	1900	1900	1900	1900	1900	1900	1900	1900	1900	1900	1900
Total Lost time (s)	4.0	4.0	4.0	4.0	4.0	4.0	4.0	4.0	4.0	4.0	4.0	4.0
Lane Util. Factor	0.97	0.95	1.00	0.97	0.95	1.00	0.97	0.95	1.00	0.97	0.95	1.00
Frt	1.00	1.00	0.85	1.00	1.00	0.85	1.00	1.00	0.85	1.00	1.00	0.85
Flt Protected	0.95	1.00	1.00	0.95	1.00	1.00	0.95	1.00	1.00	0.95	1.00	1.00
Satd. Flow (prot)	3502	3610	1615	3502	3610	1615	3502	3610	1615	3502	3610	1615
Flt Permitted	0.95	1.00	1.00	0.95	1.00	1.00	0.95	1.00	1.00	0.95	1.00	1.00
Satd. Flow (perm)	3502	3610	1615	3502	3610	1615	3502	3610	1615	3502	3610	1615
Peak-hour factor, PHF	0.96	0.96	0.96	0.96	0.96	0.96	0.96	0.96	0.96	0.96	0.96	0.96
Adj. Flow (vph)	198	583	344	135	542	135	302	385	94	115	417	177
RTOR Reduction (vph)	0	0	173	0	0	67	0	0	68	0	0	83
Lane Group Flow (vph)	198	583	171	135	542	68	302	385	26	115	417	94
Heavy Vehicles (%)	0%	0%	0%	0%	0%	0%	0%	0%	0%	0%	0%	0%
Turn Type	Prot		Perm	Prot		Perm	Prot		Perm	Prot		Perm
Protected Phases	5	2		1	6		3	8		7	4	
Permitted Phases			2			6			8			4
Actuated Green, G (s)	9.3	19.4	19.4	8.0	18.1	18.1	11.8	18.7	18.7	7.4	14.3	14.3
Effective Green, g (s)	9.8	20.9	20.9	8.5	19.6	19.6	12.3	20.2	20.2	7.9	15.8	15.8
Actuated g/C Ratio	0.13	0.28	0.28	0.12	0.27	0.27	0.17	0.27	0.27	0.11	0.21	0.21
Clearance Time (s)	4.5	5.5	5.5	4.5	5.5	5.5	4.5	5.5	5.5	4.5	5.5	5.5
Vehicle Extension (s)	2.0	2.5	2.5	2.0	2.5	2.5	2.0	2.0	2.0	2.0	2.0	2.0
Lane Grp Cap (vph)	467	1027	459	405	963	431	586	992	444	376	776	347
v/s Ratio Prot	c0.06	c0.16		0.04	0.15		c0.09	0.11		0.03	c0.12	
v/s Ratio Perm			0.11			0.04			0.02			0.06
v/c Ratio	0.42	0.57	0.37	0.33	0.56	0.16	0.52	0.39	0.06	0.31	0.54	0.27
Uniform Delay, d1	29.3	22.4	21.0	29.9	23.3	20.6	27.9	21.6	19.6	30.3	25.6	24.0
Progression Factor	1.00	1.00	1.00	1.00	1.00	1.00	1.00	1.00	1.00	1.00	1.00	1.00
Incremental Delay, d2	0.2	0.6	0.4	0.2	0.6	0.1	0.3	0.1	0.0	0.2	0.4	0.2
Delay (s)	29.5	23.0	21.4	30.1	23.9	20.8	28.2	21.7	19.7	30.4	26.0	24.2
Level of Service	C	C	C	C	C	C	C	C	B	C	C	C
Approach Delay (s)		23.7			24.4			24.0			26.3	
Approach LOS		C			C			C			C	

Intersection Summary			
HCM Average Control Delay	24.4	HCM Level of Service	C
HCM Volume to Capacity ratio	0.50		
Actuated Cycle Length (s)	73.5	Sum of lost time (s)	12.0
Intersection Capacity Utilization	53.1%	ICU Level of Service	A
Analysis Period (min)	15		

c Critical Lane Group

Movement	EBL	EBT	EBR	WBL	WBT	WBR	NBL	NBT	NBR	SBL	SBT	SBR
Lane Configurations												
Volume (vph)	60	510	100	60	510	60	100	120	40	90	120	90
Ideal Flow (vphpl)	1900	1900	1900	1900	1900	1900	1900	1900	1900	1900	1900	1900
Total Lost time (s)	4.0	4.0		4.0	4.0		4.0	4.0		4.0	4.0	4.0
Lane Util. Factor	1.00	0.95		1.00	0.95		1.00	1.00		1.00	1.00	1.00
Frt	1.00	0.98		1.00	0.98		1.00	0.96		1.00	1.00	0.85
Flt Protected	0.95	1.00		0.95	1.00		0.95	1.00		0.95	1.00	1.00
Satd. Flow (prot)	1805	3521		1787	3518		1787	1810		1805	1900	1615
Flt Permitted	0.95	1.00		0.95	1.00		0.95	1.00		0.95	1.00	1.00
Satd. Flow (perm)	1805	3521		1787	3518		1787	1810		1805	1900	1615
Peak-hour factor, PHF	0.98	0.98	0.98	0.98	0.98	0.98	0.98	0.98	0.98	0.98	0.98	0.98
Adj. Flow (vph)	61	520	102	61	520	61	102	122	41	92	122	92
RTOR Reduction (vph)	0	14	0	0	8	0	0	12	0	0	0	79
Lane Group Flow (vph)	61	608	0	61	573	0	102	151	0	92	122	13
Heavy Vehicles (%)	0%	0%	0%	1%	1%	1%	1%	1%	1%	0%	0%	0%
Turn Type	Prot			Prot			Prot			Prot		Perm
Protected Phases	1	6		5	2		3	8		7	4	
Permitted Phases												4
Actuated Green, G (s)	3.9	23.1		3.9	23.1		6.6	8.0		6.3	7.7	7.7
Effective Green, g (s)	3.9	23.6		3.9	23.6		6.6	8.5		6.3	8.2	8.2
Actuated g/C Ratio	0.07	0.40		0.07	0.40		0.11	0.15		0.11	0.14	0.14
Clearance Time (s)	4.0	4.5		4.0	4.5		4.0	4.5		4.0	4.5	4.5
Vehicle Extension (s)	2.0	5.0		2.0	3.0		2.0	2.0		2.0	2.0	2.0
Lane Grp Cap (vph)	121	1425		120	1424		202	264		195	267	227
v/s Ratio Prot	0.03	c0.17		c0.03	0.16		c0.06	c0.08		0.05	0.06	
v/s Ratio Perm												0.01
v/c Ratio	0.50	0.43		0.51	0.40		0.50	0.57		0.47	0.46	0.06
Uniform Delay, d1	26.3	12.5		26.3	12.3		24.3	23.2		24.4	23.0	21.7
Progression Factor	1.00	1.00		1.00	1.00		1.00	1.00		1.00	1.00	1.00
Incremental Delay, d2	1.2	0.4		1.2	0.2		0.7	1.9		0.7	0.5	0.0
Delay (s)	27.5	12.9		27.5	12.5		25.0	25.1		25.1	23.5	21.7
Level of Service	C	B		C	B		C	C		C	C	C
Approach Delay (s)		14.2			13.9			25.1			23.4	
Approach LOS		B			B			C			C	

Intersection Summary			
HCM Average Control Delay	17.1	HCM Level of Service	B
HCM Volume to Capacity ratio	0.44		
Actuated Cycle Length (s)	58.3	Sum of lost time (s)	12.0
Intersection Capacity Utilization	47.7%	ICU Level of Service	A
Analysis Period (min)	15		

c Critical Lane Group

Movement	EBL	EBT	EBR	WBL	WBT	WBR	NBL	NBT	NBR	SBL	SBT	SBR
Lane Configurations												
Volume (veh/h)	20	60	80	70	30	47	40	130	90	14	63	10
Sign Control		Stop			Stop			Free			Free	
Grade		0%			0%			0%			0%	
Peak Hour Factor	0.82	0.82	0.82	0.82	0.82	0.82	0.82	0.82	0.82	0.82	0.82	0.82
Hourly flow rate (vph)	24	73	98	85	37	57	49	159	110	17	77	12
Pedestrians												
Lane Width (ft)												
Walking Speed (ft/s)												
Percent Blockage												
Right turn flare (veh)												
Median type								None			None	
Median storage veh)												
Upstream signal (ft)												
pX, platoon unblocked												
vC, conflicting volume	504	483	83	562	434	213	89			268		
vC1, stage 1 conf vol												
vC2, stage 2 conf vol												
vCu, unblocked vol	504	483	83	562	434	213	89			268		
tC, single (s)	7.1	6.5	6.2	7.1	6.5	6.2	4.1			4.1		
tC, 2 stage (s)												
tF (s)	3.5	4.0	3.3	3.5	4.0	3.3	2.2			2.2		
p0 queue free %	94	84	90	75	93	93	97			99		
cM capacity (veh/h)	409	464	982	337	495	832	1506			1295		

Direction, Lane #	EB 1	WB 1	NB 1	SB 1
Volume Total	195	179	317	106
Volume Left	24	85	49	17
Volume Right	98	57	110	12
cSH	616	453	1506	1295
Volume to Capacity	0.32	0.40	0.03	0.01
Queue Length 95th (ft)	34	47	3	1
Control Delay (s)	13.5	18.1	1.4	1.3
Lane LOS	B	C	A	A
Approach Delay (s)	13.5	18.1	1.4	1.3
Approach LOS	B	C		

Intersection Summary			
Average Delay	8.1		
Intersection Capacity Utilization	46.7%	ICU Level of Service	A
Analysis Period (min)	15		

Movement	EBL	EBR	NBL	NBT	SBT	SBR
Lane Configurations						
Volume (vph)	50	450	400	220	143	50
Ideal Flow (vphpl)	1900	1900	1900	1900	1900	1900
Total Lost time (s)	4.0	4.0	4.0	4.0	4.0	
Lane Util. Factor	1.00	1.00	1.00	1.00	1.00	
Frt	1.00	0.85	1.00	1.00	0.97	
Flt Protected	0.95	1.00	0.95	1.00	1.00	
Satd. Flow (prot)	1787	1599	1805	1900	1815	
Flt Permitted	0.95	1.00	0.95	1.00	1.00	
Satd. Flow (perm)	1787	1599	1805	1900	1815	
Peak-hour factor, PHF	0.96	0.96	0.96	0.96	0.96	0.96
Adj. Flow (vph)	52	469	417	229	149	52
RTOR Reduction (vph)	0	391	0	0	20	0
Lane Group Flow (vph)	52	78	417	229	181	0
Heavy Vehicles (%)	1%	1%	0%	0%	1%	1%
Turn Type		Perm	Prot			
Protected Phases	2		3	8	4	
Permitted Phases		2				
Actuated Green, G (s)	7.9	7.9	16.3	30.8	10.0	
Effective Green, g (s)	7.9	7.9	16.8	31.3	10.5	
Actuated g/C Ratio	0.17	0.17	0.36	0.66	0.22	
Clearance Time (s)	4.0	4.0	4.5	4.5	4.5	
Vehicle Extension (s)	2.0	2.0	2.0	2.5	2.5	
Lane Grp Cap (vph)	299	268	642	1260	404	
v/s Ratio Prot	0.03		c0.23	0.12	c0.10	
v/s Ratio Perm		c0.05				
v/c Ratio	0.17	0.29	0.65	0.18	0.45	
Uniform Delay, d1	16.9	17.2	12.7	3.0	15.8	
Progression Factor	1.00	1.00	1.00	1.00	1.00	
Incremental Delay, d2	0.1	0.2	1.7	0.1	0.6	
Delay (s)	17.0	17.4	14.4	3.1	16.4	
Level of Service	B	B	B	A	B	
Approach Delay (s)	17.4			10.4	16.4	
Approach LOS	B			B	B	

Intersection Summary			
HCM Average Control Delay	14.0	HCM Level of Service	B
HCM Volume to Capacity ratio	0.51		
Actuated Cycle Length (s)	47.2	Sum of lost time (s)	12.0
Intersection Capacity Utilization	47.7%	ICU Level of Service	A
Analysis Period (min)	15		

c Critical Lane Group

Movement	EBL	EBT	EBR	WBL	WBT	WBR	NBL	NBT	NBR	SBL	SBT	SBR
Lane Configurations												
Volume (vph)	121	750	660	260	440	112	490	429	280	131	398	71
Ideal Flow (vphpl)	1900	1900	1900	1900	1900	1900	1900	1900	1900	1900	1900	1900
Total Lost time (s)	4.0	4.0	4.0	4.0	4.0		4.0	4.0	4.0	4.0	4.0	
Lane Util. Factor	1.00	0.95	1.00	1.00	0.95		0.94	0.95	1.00	1.00	0.95	
Frt	1.00	1.00	0.85	1.00	0.97		1.00	1.00	0.85	1.00	0.98	
Flt Protected	0.95	1.00	1.00	0.95	1.00		0.95	1.00	1.00	0.95	1.00	
Satd. Flow (prot)	1805	3610	1615	1805	3500		5090	3610	1615	1787	3493	
Flt Permitted	0.95	1.00	1.00	0.95	1.00		0.95	1.00	1.00	0.95	1.00	
Satd. Flow (perm)	1805	3610	1615	1805	3500		5090	3610	1615	1787	3493	
Peak-hour factor, PHF	0.96	0.96	0.96	0.96	0.96	0.96	0.96	0.96	0.96	0.96	0.96	0.96
Adj. Flow (vph)	126	781	688	271	458	117	510	447	292	136	415	74
RTOR Reduction (vph)	0	0	273	0	19	0	0	0	192	0	13	0
Lane Group Flow (vph)	126	781	415	271	556	0	510	447	100	136	476	0
Heavy Vehicles (%)	0%	0%	0%	0%	0%	0%	0%	0%	0%	1%	1%	1%
Turn Type	Prot		Perm	Prot			Prot		Perm	Prot		
Protected Phases	7	4		3	8		5	2		1	6	
Permitted Phases			4						2			
Actuated Green, G (s)	11.8	28.5	28.5	14.5	31.2		16.5	37.9	37.9	12.1	33.5	
Effective Green, g (s)	13.3	30.0	30.0	16.0	32.7		18.0	39.4	39.4	13.6	35.0	
Actuated g/C Ratio	0.12	0.26	0.26	0.14	0.28		0.16	0.34	0.34	0.12	0.30	
Clearance Time (s)	5.5	5.5	5.5	5.5	5.5		5.5	5.5	5.5	5.5	5.5	
Vehicle Extension (s)	2.0	3.0	3.0	2.0	3.0		2.0	3.0	3.0	2.0	3.0	
Lane Grp Cap (vph)	209	942	421	251	995		797	1237	553	211	1063	
v/s Ratio Prot	0.07	0.22		c0.15	c0.16		c0.10	0.12		0.08	c0.14	
v/s Ratio Perm			c0.26						0.06			
v/c Ratio	0.60	0.83	0.98	1.08	0.56		0.64	0.36	0.18	0.64	0.45	
Uniform Delay, d1	48.3	40.1	42.3	49.5	35.0		45.5	28.4	26.5	48.4	32.2	
Progression Factor	1.00	1.00	1.00	1.00	1.00		1.00	1.00	1.00	1.00	1.00	
Incremental Delay, d2	3.3	6.1	39.5	79.6	0.7		3.9	0.8	0.7	5.0	0.3	
Delay (s)	51.7	46.2	81.8	129.1	35.7		49.4	29.2	27.2	53.4	32.5	
Level of Service	D	D	F	F	D		D	C	C	D	C	
Approach Delay (s)		62.0			65.6			37.0			37.1	
Approach LOS		E			E			D			D	

Intersection Summary			
HCM Average Control Delay	51.8	HCM Level of Service	D
HCM Volume to Capacity ratio	0.77		
Actuated Cycle Length (s)	115.0	Sum of lost time (s)	20.0
Intersection Capacity Utilization	78.5%	ICU Level of Service	D
Analysis Period (min)	15		

c Critical Lane Group

Level Of Service Computation Report
2000 HCM 4-Way Stop Method (Future Volume Alternative)

Intersection #4 Larch Rd/Tracy Blvd

Cycle (sec):	100	Critical Vol./Cap.(X):	0.662
Loss Time (sec):	0 (Y+R=4.0 sec)	Average Delay (sec/veh):	16.8
Optimal Cycle:	0	Level Of Service:	C

Street Name:	Tracy Blvd						Larch Rd					
Approach:	North Bound			South Bound			East Bound			West Bound		
Movement:	L - T - R			L - T - R			L - T - R			L - T - R		
Control:	Stop Sign			Stop Sign			Stop Sign			Stop Sign		
Rights:	Include			Include			Include			Include		
Min. Green:	0	0	0	0	0	0	0	0	0	0	0	0
Lanes:	1 0 1	0 1		1 0 0	1 0		0 0 1!	0 0		0 1	0 0	1
Volume Module:												
Base Vol:	70	150	120	10	90	10	10	80	70	160	70	20
Growth Adj:	1.00	1.00	1.00	1.00	1.00	1.00	1.00	1.00	1.00	1.00	1.00	1.00
Initial Bse:	70	150	120	10	90	10	10	80	70	160	70	20
Added Vol:	7	125	0	13	57	0	0	0	4	0	0	30
PasserByVol:	0	0	0	0	0	0	0	0	0	0	0	0
Initial Fut:	77	275	120	23	147	10	10	80	74	160	70	50
User Adj:	1.00	1.00	1.00	1.00	1.00	1.00	1.00	1.00	1.00	1.00	1.00	1.00
PHF Adj:	0.85	0.85	0.85	0.85	0.85	0.85	0.85	0.85	0.85	0.85	0.85	0.85
PHF Volume:	91	324	141	27	173	12	12	94	87	188	82	59
Reduct Vol:	0	0	0	0	0	0	0	0	0	0	0	0
Reduced Vol:	91	324	141	27	173	12	12	94	87	188	82	59
PCE Adj:	1.00	1.00	1.00	1.00	1.00	1.00	1.00	1.00	1.00	1.00	1.00	1.00
MLF Adj:	1.00	1.00	1.00	1.00	1.00	1.00	1.00	1.00	1.00	1.00	1.00	1.00
FinalVolume:	91	324	141	27	173	12	12	94	87	188	82	59
Saturation Flow Module:												
Adjustment:	1.00	1.00	1.00	1.00	1.00	1.00	1.00	1.00	1.00	1.00	1.00	1.00
Lanes:	1.00	1.00	1.00	1.00	0.94	0.06	0.06	0.49	0.45	0.70	0.30	1.00
Final Sat.:	454	489	536	427	432	29	29	232	214	322	141	528
Capacity Analysis Module:												
Vol/Sat:	0.20	0.66	0.26	0.06	0.40	0.40	0.41	0.41	0.41	0.59	0.59	0.11
Crit Moves:		****			****		****			****		
Delay/Veh:	12.3	22.3	11.4	11.1	14.5	14.5	14.6	14.6	14.6	19.6	19.6	10.0
Delay Adj:	1.00	1.00	1.00	1.00	1.00	1.00	1.00	1.00	1.00	1.00	1.00	1.00
AdjDel/Veh:	12.3	22.3	11.4	11.1	14.5	14.5	14.6	14.6	14.6	19.6	19.6	10.0
LOS by Move:	B	C	B	B	B	B	B	B	B	C	C	A
ApproachDel:		17.9			14.1			14.6			17.9	
Delay Adj:		1.00			1.00			1.00			1.00	
ApprAdjDel:		17.9			14.1			14.6			17.9	
LOS by Appr:		C			B			B			C	
AllWayAvgQ:	0.2	1.7	0.3	0.1	0.6	0.6	0.6	0.6	0.6	1.2	1.2	0.1

Note: Queue reported is the number of cars per lane.

Movement	EBL	EBT	EBR	WBL	WBT	WBR	NBL	NBT	NBR	SBL	SBT	SBR
Lane Configurations												
Volume (vph)	0	0	0	390	0	137	130	426	0	0	369	112
Ideal Flow (vphpl)	1900	1900	1900	1900	1900	1900	1900	1900	1900	1900	1900	1900
Total Lost time (s)					4.0	4.0	4.0	4.0			4.0	
Lane Util. Factor					1.00	1.00	1.00	0.95			0.95	
Frt					1.00	0.85	1.00	1.00			0.97	
Flt Protected					0.95	1.00	0.95	1.00			1.00	
Satd. Flow (prot)					1736	1553	1736	3471			3318	
Flt Permitted					0.95	1.00	0.95	1.00			1.00	
Satd. Flow (perm)					1736	1553	1736	3471			3318	
Peak-hour factor, PHF	0.94	0.94	0.94	0.94	0.94	0.94	0.94	0.94	0.94	0.94	0.94	0.94
Adj. Flow (vph)	0	0	0	415	0	146	138	453	0	0	393	119
RTOR Reduction (vph)	0	0	0	0	0	57	0	0	0	0	29	0
Lane Group Flow (vph)	0	0	0	0	415	89	138	453	0	0	483	0
Heavy Vehicles (%)	0%	0%	0%	4%	4%	4%	4%	4%	4%	5%	5%	5%
Turn Type				Perm		Perm	Prot					
Protected Phases					8		5	2			6	
Permitted Phases				8		8						
Actuated Green, G (s)					21.2	21.2	11.2	32.9			17.7	
Effective Green, g (s)					21.2	21.2	11.2	33.8			18.6	
Actuated g/C Ratio					0.34	0.34	0.18	0.54			0.30	
Clearance Time (s)					4.0	4.0	4.0	4.9			4.9	
Vehicle Extension (s)					3.0	3.0	3.0	3.0			3.0	
Lane Grp Cap (vph)					584	523	309	1862			980	
v/s Ratio Prot							c0.08	0.13			c0.15	
v/s Ratio Perm					0.24	0.06						
v/c Ratio					0.71	0.17	0.45	0.24			0.49	
Uniform Delay, d1					18.2	14.7	23.1	7.8			18.3	
Progression Factor					1.00	1.00	1.00	1.00			1.00	
Incremental Delay, d2					4.1	0.2	1.0	0.1			0.4	
Delay (s)					22.3	14.9	24.2	7.9			18.7	
Level of Service					C	B	C	A			B	
Approach Delay (s)		0.0			20.4			11.7			18.7	
Approach LOS		A			C			B			B	

Intersection Summary			
HCM Average Control Delay	16.8	HCM Level of Service	B
HCM Volume to Capacity ratio	0.57		
Actuated Cycle Length (s)	63.0	Sum of lost time (s)	12.0
Intersection Capacity Utilization	52.6%	ICU Level of Service	A
Analysis Period (min)	15		

c Critical Lane Group

Movement	EBL	EBT	EBR	WBL	WBT	WBR	NBL	NBT	NBR	SBL	SBT	SBR
Lane Configurations												
Volume (vph)	84	0	160	0	0	0	0	472	270	128	631	0
Ideal Flow (vphpl)	1900	1900	1900	1900	1900	1900	1900	1900	1900	1900	1900	1900
Total Lost time (s)		4.0	4.0					4.0		4.0	4.0	
Lane Util. Factor		1.00	1.00					0.95		1.00	0.95	
Frt		1.00	0.85					0.95		1.00	1.00	
Flt Protected		0.95	1.00					1.00		0.95	1.00	
Satd. Flow (prot)		1703	1524					3346		1752	3505	
Flt Permitted		0.95	1.00					1.00		0.95	1.00	
Satd. Flow (perm)		1703	1524					3346		1752	3505	
Peak-hour factor, PHF	0.95	0.95	0.95	0.95	0.95	0.95	0.95	0.95	0.95	0.95	0.95	0.95
Adj. Flow (vph)	88	0	168	0	0	0	0	497	284	135	664	0
RTOR Reduction (vph)	0	0	135	0	0	0	0	76	0	0	0	0
Lane Group Flow (vph)	0	88	33	0	0	0	0	705	0	135	664	0
Heavy Vehicles (%)	6%	6%	6%	0%	0%	0%	2%	2%	2%	3%	3%	3%
Turn Type	Perm		Perm							Prot		
Protected Phases		4						2		1	6	
Permitted Phases	4		4									
Actuated Green, G (s)		8.7	8.7					18.2		7.9	30.1	
Effective Green, g (s)		9.6	9.6					19.1		7.9	31.0	
Actuated g/C Ratio		0.20	0.20					0.39		0.16	0.64	
Clearance Time (s)		4.9	4.9					4.9		4.0	4.9	
Vehicle Extension (s)		3.0	3.0					3.0		3.0	3.0	
Lane Grp Cap (vph)		336	301					1315		285	2236	
v/s Ratio Prot								c0.21		c0.08	0.19	
v/s Ratio Perm		0.05	0.02									
v/c Ratio		0.26	0.11					0.54		0.47	0.30	
Uniform Delay, d1		16.5	16.0					11.3		18.5	3.9	
Progression Factor		1.00	1.00					1.00		1.00	1.00	
Incremental Delay, d2		0.4	0.2					0.4		1.2	0.1	
Delay (s)		16.9	16.2					11.8		19.7	4.0	
Level of Service		B	B					B		B	A	
Approach Delay (s)		16.4			0.0			11.8			6.7	
Approach LOS		B			A			B			A	

Intersection Summary			
HCM Average Control Delay	10.2	HCM Level of Service	B
HCM Volume to Capacity ratio	0.45		
Actuated Cycle Length (s)	48.6	Sum of lost time (s)	12.0
Intersection Capacity Utilization	52.6%	ICU Level of Service	A
Analysis Period (min)	15		

c Critical Lane Group

Movement	EBL	EBT	EBR	WBL	WBT	WBR	NBL	NBT	NBR	SBL	SBT	SBR
Lane Configurations												
Volume (vph)	222	580	160	140	410	148	210	557	180	163	579	171
Ideal Flow (vphpl)	1900	1900	1900	1900	1900	1900	1900	1900	1900	1900	1900	1900
Total Lost time (s)	4.0	4.0		4.0	4.0		4.0	4.0		4.0	4.0	
Lane Util. Factor	1.00	0.95		1.00	0.95		1.00	0.95		1.00	0.95	
Frt	1.00	0.97		1.00	0.96		1.00	0.96		1.00	0.97	
Flt Protected	0.95	1.00		0.95	1.00		0.95	1.00		0.95	1.00	
Satd. Flow (prot)	1805	3493		1787	3432		1787	3444		1787	3452	
Flt Permitted	0.95	1.00		0.95	1.00		0.95	1.00		0.95	1.00	
Satd. Flow (perm)	1805	3493		1787	3432		1787	3444		1787	3452	
Peak-hour factor, PHF	0.95	0.95	0.95	0.95	0.95	0.95	0.95	0.95	0.95	0.95	0.95	0.95
Adj. Flow (vph)	234	611	168	147	432	156	221	586	189	172	609	180
RTOR Reduction (vph)	0	25	0	0	39	0	0	28	0	0	25	0
Lane Group Flow (vph)	234	754	0	147	549	0	221	747	0	172	764	0
Heavy Vehicles (%)	0%	0%	0%	1%	1%	1%	1%	1%	1%	1%	1%	1%
Turn Type	Prot			Prot			Prot			Prot		
Protected Phases	5	2		1	6		3	8		7	4	
Permitted Phases												
Actuated Green, G (s)	15.1	23.1		11.3	19.3		14.8	30.5		12.6	28.3	
Effective Green, g (s)	15.6	24.1		11.8	20.3		15.3	31.0		13.1	28.8	
Actuated g/C Ratio	0.16	0.25		0.12	0.21		0.16	0.32		0.14	0.30	
Clearance Time (s)	4.5	5.0		4.5	5.0		4.5	4.5		4.5	4.5	
Vehicle Extension (s)	1.0	3.0		1.0	3.0		1.0	3.0		1.0	3.0	
Lane Grp Cap (vph)	293	877		220	726		285	1112		244	1036	
v/s Ratio Prot	c0.13	c0.22		0.08	0.16		c0.12	0.22		0.10	c0.22	
v/s Ratio Perm												
v/c Ratio	0.80	0.86		0.67	0.76		0.78	0.67		0.70	0.74	
Uniform Delay, d1	38.7	34.3		40.2	35.5		38.7	28.1		39.6	30.2	
Progression Factor	1.00	1.00		1.00	1.00		1.00	1.00		1.00	1.00	
Incremental Delay, d2	13.2	8.4		5.8	4.5		11.4	3.2		7.3	4.7	
Delay (s)	51.9	42.7		46.1	40.0		50.1	31.3		47.0	34.9	
Level of Service	D	D		D	D		D	C		D	C	
Approach Delay (s)		44.8			41.3			35.5			37.0	
Approach LOS		D			D			D			D	

Intersection Summary			
HCM Average Control Delay	39.6	HCM Level of Service	D
HCM Volume to Capacity ratio	0.80		
Actuated Cycle Length (s)	96.0	Sum of lost time (s)	16.0
Intersection Capacity Utilization	75.3%	ICU Level of Service	D
Analysis Period (min)	15		

c Critical Lane Group

Movement	EBL	EBT	EBR	WBL	WBT	WBR	NBL	NBT	NBR	SBL	SBT	SBR
Lane Configurations												
Volume (veh/h)	80	10	103	10	10	10	80	30	10	10	40	50
Sign Control		Stop			Stop			Free			Free	
Grade		0%			0%			0%			0%	
Peak Hour Factor	0.80	0.80	0.80	0.80	0.80	0.80	0.80	0.80	0.80	0.80	0.80	0.80
Hourly flow rate (vph)	100	12	129	12	12	12	100	38	12	12	50	62
Pedestrians												
Lane Width (ft)												
Walking Speed (ft/s)												
Percent Blockage												
Right turn flare (veh)												
Median type								None			None	
Median storage veh)												
Upstream signal (ft)												
pX, platoon unblocked												
vC, conflicting volume	369	356	81	485	381	44	112			50		
vC1, stage 1 conf vol												
vC2, stage 2 conf vol												
vCu, unblocked vol	369	356	81	485	381	44	112			50		
tC, single (s)	7.1	6.5	6.2	7.1	6.5	6.2	4.1			4.1		
tC, 2 stage (s)												
tF (s)	3.5	4.0	3.3	3.5	4.0	3.3	2.2			2.2		
p0 queue free %	81	98	87	97	98	99	93			99		
cM capacity (veh/h)	539	528	981	399	513	1032	1471			1563		

Direction, Lane #	EB 1	EB 2	WB 1	NB 1	SB 1
Volume Total	100	141	38	150	125
Volume Left	100	0	12	100	12
Volume Right	0	129	12	12	62
cSH	539	912	553	1471	1563
Volume to Capacity	0.19	0.15	0.07	0.07	0.01
Queue Length 95th (ft)	17	14	5	5	1
Control Delay (s)	13.2	9.7	12.0	5.3	0.8
Lane LOS	B	A	B	A	A
Approach Delay (s)	11.1		12.0	5.3	0.8
Approach LOS	B		B		

Intersection Summary			
Average Delay	7.3		
Intersection Capacity Utilization	31.0%	ICU Level of Service	A
Analysis Period (min)	15		

Movement	EBL	EBT	EBR	WBL	WBT	WBR	NBL	NBT	NBR	SBL	SBT	SBR
Lane Configurations												
Volume (vph)	100	653	90	50	426	60	100	153	50	120	150	80
Ideal Flow (vphpl)	1900	1900	1900	1900	1900	1900	1900	1900	1900	1900	1900	1900
Total Lost time (s)	4.0	4.0		4.0	4.0		4.0	4.0	4.0	4.0	4.0	4.0
Lane Util. Factor	1.00	0.95		1.00	0.95		1.00	1.00	1.00	1.00	1.00	1.00
Frt	1.00	0.98		1.00	0.98		1.00	1.00	0.85	1.00	1.00	0.85
Flt Protected	0.95	1.00		0.95	1.00		0.95	1.00	1.00	0.95	1.00	1.00
Satd. Flow (prot)	1805	3544		1805	3543		1805	1900	1615	1805	1900	1615
Flt Permitted	0.95	1.00		0.95	1.00		0.95	1.00	1.00	0.95	1.00	1.00
Satd. Flow (perm)	1805	3544		1805	3543		1805	1900	1615	1805	1900	1615
Peak-hour factor, PHF	0.91	0.91	0.91	0.91	0.91	0.91	0.91	0.91	0.91	0.91	0.91	0.91
Adj. Flow (vph)	110	718	99	55	468	66	110	168	55	132	165	88
RTOR Reduction (vph)	0	10	0	0	11	0	0	0	44	0	0	68
Lane Group Flow (vph)	110	807	0	55	523	0	110	168	11	132	165	20
Heavy Vehicles (%)	0%	0%	0%	0%	0%	0%	0%	0%	0%	0%	0%	0%
Turn Type	Prot			Prot			Prot		Perm	Prot		Perm
Protected Phases	1	6		5	2		3	8		7	4	
Permitted Phases									8			4
Actuated Green, G (s)	6.2	21.9		3.5	19.2		6.2	11.5	11.5	6.8	12.1	12.1
Effective Green, g (s)	6.7	22.4		4.0	19.7		6.7	12.0	12.0	7.3	12.6	12.6
Actuated g/C Ratio	0.11	0.36		0.06	0.32		0.11	0.19	0.19	0.12	0.20	0.20
Clearance Time (s)	4.5	4.5		4.5	4.5		4.5	4.5	4.5	4.5	4.5	4.5
Vehicle Extension (s)	1.0	3.0		1.0	3.0		1.0	2.0	2.0	1.0	2.0	2.0
Lane Grp Cap (vph)	196	1287		117	1131		196	370	314	214	388	330
v/s Ratio Prot	c0.06	c0.23		0.03	0.15		0.06	c0.09		c0.07	0.09	
v/s Ratio Perm									0.01			0.01
v/c Ratio	0.56	0.63		0.47	0.46		0.56	0.45	0.03	0.62	0.43	0.06
Uniform Delay, d1	26.1	16.2		27.8	16.8		26.1	22.0	20.2	25.9	21.4	19.8
Progression Factor	1.00	1.00		1.00	1.00		1.00	1.00	1.00	1.00	1.00	1.00
Incremental Delay, d2	2.2	1.0		1.1	0.3		2.2	0.3	0.0	3.7	0.3	0.0
Delay (s)	28.3	17.2		28.9	17.1		28.3	22.3	20.2	29.6	21.7	19.8
Level of Service	C	B		C	B		C	C	C	C	C	B
Approach Delay (s)		18.5			18.2			23.9			23.9	
Approach LOS		B			B			C			C	

Intersection Summary			
HCM Average Control Delay	20.2	HCM Level of Service	C
HCM Volume to Capacity ratio	0.59		
Actuated Cycle Length (s)	61.7	Sum of lost time (s)	16.0
Intersection Capacity Utilization	54.0%	ICU Level of Service	A
Analysis Period (min)	15		

c Critical Lane Group

Movement	EBL	EBT	EBR	WBL	WBT	WBR	NBL	NBT	NBR	SBL	SBT	SBR
Lane Configurations												
Volume (vph)	483	830	760	350	390	243	260	1000	170	291	819	91
Ideal Flow (vphpl)	1900	1900	1900	1900	1900	1900	1900	1900	1900	1900	1900	1900
Total Lost time (s)	4.0	4.0	4.0	4.0	4.0	4.0	4.0	4.0	4.0	4.0	4.0	4.0
Lane Util. Factor	0.97	0.91	1.00	0.97	0.91	1.00	0.97	0.95	1.00	0.97	0.95	1.00
Frt	1.00	1.00	0.85	1.00	1.00	0.85	1.00	1.00	0.85	1.00	1.00	0.85
Flt Protected	0.95	1.00	1.00	0.95	1.00	1.00	0.95	1.00	1.00	0.95	1.00	1.00
Satd. Flow (prot)	3502	5187	1615	3502	5187	1615	3502	3610	1615	3502	3610	1615
Flt Permitted	0.95	1.00	1.00	0.95	1.00	1.00	0.95	1.00	1.00	0.95	1.00	1.00
Satd. Flow (perm)	3502	5187	1615	3502	5187	1615	3502	3610	1615	3502	3610	1615
Peak-hour factor, PHF	0.96	0.96	0.96	0.96	0.96	0.96	0.96	0.96	0.96	0.96	0.96	0.96
Adj. Flow (vph)	503	865	792	365	406	253	271	1042	177	303	853	95
RTOR Reduction (vph)	0	0	0	0	0	197	0	0	55	0	0	38
Lane Group Flow (vph)	503	865	792	365	406	56	271	1042	122	303	853	57
Heavy Vehicles (%)	0%	0%	0%	0%	0%	0%	0%	0%	0%	0%	0%	0%
Turn Type	Prot		Free	Prot		Perm	Prot		Perm	Prot		Perm
Protected Phases	5	2		1	6		7	4		3	8	
Permitted Phases			Free			6			4			8
Actuated Green, G (s)	19.0	28.3	130.0	17.5	26.8	26.8	15.2	46.1	46.1	16.1	47.0	47.0
Effective Green, g (s)	20.0	30.3	130.0	18.5	28.8	28.8	16.2	48.1	48.1	17.1	49.0	49.0
Actuated g/C Ratio	0.15	0.23	1.00	0.14	0.22	0.22	0.12	0.37	0.37	0.13	0.38	0.38
Clearance Time (s)	5.0	6.0		5.0	6.0	6.0	5.0	6.0	6.0	5.0	6.0	6.0
Vehicle Extension (s)	3.0	3.0		3.0	3.0	3.0	3.0	3.0	3.0	3.0	3.0	3.0
Lane Grp Cap (vph)	539	1209	1615	498	1149	358	436	1336	598	461	1361	609
v/s Ratio Prot	c0.14	c0.17		0.10	0.08		0.08	c0.29		c0.09	0.24	
v/s Ratio Perm			c0.49			0.03			0.08			0.04
v/c Ratio	0.93	0.72	0.49	0.73	0.35	0.16	0.62	0.78	0.20	0.66	0.63	0.09
Uniform Delay, d1	54.3	45.9	0.0	53.4	42.7	40.8	54.0	36.3	27.9	53.7	33.0	26.2
Progression Factor	1.00	1.00	1.00	1.00	1.00	1.00	1.00	1.00	1.00	1.00	1.00	1.00
Incremental Delay, d2	23.3	2.0	1.1	5.5	0.2	0.2	2.7	4.6	0.8	3.4	2.2	0.3
Delay (s)	77.7	47.9	1.1	58.9	42.9	41.0	56.7	40.8	28.7	57.0	35.2	26.5
Level of Service	E	D	A	E	D	D	E	D	C	E	D	C
Approach Delay (s)		37.7			48.1			42.3			39.8	
Approach LOS		D			D			D			D	

Intersection Summary			
HCM Average Control Delay	41.1	HCM Level of Service	D
HCM Volume to Capacity ratio	0.77		
Actuated Cycle Length (s)	130.0	Sum of lost time (s)	12.0
Intersection Capacity Utilization	75.3%	ICU Level of Service	D
Analysis Period (min)	15		

c Critical Lane Group

Movement	EBL	EBT	EBR	WBL	WBT	WBR	NBL	NBT	NBR	SBL	SBT	SBR
Lane Configurations												
Volume (vph)	205	640	370	250	540	170	270	574	100	204	644	322
Ideal Flow (vphpl)	1900	1900	1900	1900	1900	1900	1900	1900	1900	1900	1900	1900
Total Lost time (s)	4.0	4.0	4.0	4.0	4.0	4.0	4.0	4.0	4.0	4.0	4.0	4.0
Lane Util. Factor	0.97	0.95	1.00	0.97	0.95	1.00	0.97	0.95	1.00	0.97	0.95	1.00
Frt	1.00	1.00	0.85	1.00	1.00	0.85	1.00	1.00	0.85	1.00	1.00	0.85
Flt Protected	0.95	1.00	1.00	0.95	1.00	1.00	0.95	1.00	1.00	0.95	1.00	1.00
Satd. Flow (prot)	3502	3610	1615	3502	3610	1615	3502	3610	1615	3502	3610	1615
Flt Permitted	0.95	1.00	1.00	0.95	1.00	1.00	0.95	1.00	1.00	0.95	1.00	1.00
Satd. Flow (perm)	3502	3610	1615	3502	3610	1615	3502	3610	1615	3502	3610	1615
Peak-hour factor, PHF	0.96	0.96	0.96	0.96	0.96	0.96	0.96	0.96	0.96	0.96	0.96	0.96
Adj. Flow (vph)	214	667	385	260	562	177	281	598	104	212	671	335
RTOR Reduction (vph)	0	0	177	0	0	84	0	0	60	0	0	108
Lane Group Flow (vph)	214	667	208	260	562	93	281	598	44	212	671	227
Heavy Vehicles (%)	0%	0%	0%	0%	0%	0%	0%	0%	0%	0%	0%	0%
Turn Type	Prot		Perm	Prot		Perm	Prot		Perm	Prot		Perm
Protected Phases	5	2		1	6		3	8		7	4	
Permitted Phases			2			6			8			4
Actuated Green, G (s)	11.1	40.8	40.8	12.5	42.2	42.2	12.8	25.7	25.7	11.0	23.9	23.9
Effective Green, g (s)	11.6	42.3	42.3	13.0	43.7	43.7	13.3	27.2	27.2	11.5	25.4	25.4
Actuated g/C Ratio	0.11	0.38	0.38	0.12	0.40	0.40	0.12	0.25	0.25	0.10	0.23	0.23
Clearance Time (s)	4.5	5.5	5.5	4.5	5.5	5.5	4.5	5.5	5.5	4.5	5.5	5.5
Vehicle Extension (s)	2.0	2.5	2.5	2.0	2.5	2.5	2.0	2.0	2.0	2.0	2.0	2.0
Lane Grp Cap (vph)	369	1388	621	414	1434	642	423	893	399	366	834	373
v/s Ratio Prot	0.06	c0.18		c0.07	0.16		c0.08	0.17		0.06	c0.19	
v/s Ratio Perm			0.13			0.06			0.03			0.14
v/c Ratio	0.58	0.48	0.34	0.63	0.39	0.14	0.66	0.67	0.11	0.58	0.80	0.61
Uniform Delay, d1	46.9	25.6	23.9	46.2	23.7	21.2	46.2	37.3	32.0	46.9	40.0	37.9
Progression Factor	1.00	1.00	1.00	1.00	1.00	1.00	1.00	1.00	1.00	1.00	1.00	1.00
Incremental Delay, d2	1.4	1.2	1.5	2.1	0.8	0.5	3.0	1.5	0.0	1.4	5.4	1.9
Delay (s)	48.3	26.7	25.4	48.3	24.5	21.7	49.3	38.8	32.1	48.3	45.3	39.8
Level of Service	D	C	C	D	C	C	D	D	C	D	D	D
Approach Delay (s)		30.0			30.2			41.1			44.3	
Approach LOS		C			C			D			D	

Intersection Summary			
HCM Average Control Delay	36.4	HCM Level of Service	D
HCM Volume to Capacity ratio	0.61		
Actuated Cycle Length (s)	110.0	Sum of lost time (s)	16.0
Intersection Capacity Utilization	63.7%	ICU Level of Service	B
Analysis Period (min)	15		

c Critical Lane Group

Movement	EBL	EBT	EBR	WBL	WBT	WBR	NBL	NBT	NBR	SBL	SBT	SBR
Lane Configurations												
Volume (vph)	80	592	110	80	565	42	130	152	50	81	135	100
Ideal Flow (vphpl)	1900	1900	1900	1900	1900	1900	1900	1900	1900	1900	1900	1900
Total Lost time (s)	4.0	4.0		4.0	4.0		4.0	4.0		4.0	4.0	4.0
Lane Util. Factor	1.00	0.95		1.00	0.95		1.00	1.00		1.00	1.00	1.00
Frt	1.00	0.98		1.00	0.99		1.00	0.96		1.00	1.00	0.85
Flt Protected	0.95	1.00		0.95	1.00		0.95	1.00		0.95	1.00	1.00
Satd. Flow (prot)	1787	3490		1805	3572		1787	1811		1770	1863	1583
Flt Permitted	0.95	1.00		0.95	1.00		0.95	1.00		0.95	1.00	1.00
Satd. Flow (perm)	1787	3490		1805	3572		1787	1811		1770	1863	1583
Peak-hour factor, PHF	0.88	0.88	0.88	0.88	0.88	0.88	0.88	0.88	0.88	0.88	0.88	0.88
Adj. Flow (vph)	91	673	125	91	642	48	148	173	57	92	153	114
RTOR Reduction (vph)	0	11	0	0	4	0	0	14	0	0	0	92
Lane Group Flow (vph)	91	787	0	91	686	0	148	216	0	92	153	22
Heavy Vehicles (%)	1%	1%	1%	0%	0%	0%	1%	1%	1%	2%	2%	2%
Turn Type	Prot			Prot			Prot			Prot		Perm
Protected Phases	1	6		5	2		3	8		7	4	
Permitted Phases												4
Actuated Green, G (s)	7.6	45.5		7.6	45.5		12.3	17.6		8.3	13.6	13.6
Effective Green, g (s)	7.6	46.0		7.6	46.0		12.3	18.1		8.3	14.1	14.1
Actuated g/C Ratio	0.08	0.48		0.08	0.48		0.13	0.19		0.09	0.15	0.15
Clearance Time (s)	4.0	4.5		4.0	4.5		4.0	4.5		4.0	4.5	4.5
Vehicle Extension (s)	2.0	5.0		2.0	3.0		2.0	2.0		2.0	2.0	2.0
Lane Grp Cap (vph)	141	1672		143	1712		229	341		153	274	233
v/s Ratio Prot	c0.05	c0.23		0.05	0.19		c0.08	c0.12		0.05	0.08	
v/s Ratio Perm												0.01
v/c Ratio	0.65	0.47		0.64	0.40		0.65	0.63		0.60	0.56	0.09
Uniform Delay, d1	42.9	16.8		42.9	16.1		39.8	35.9		42.3	38.1	35.4
Progression Factor	1.00	1.00		1.00	1.00		1.00	1.00		1.00	1.00	1.00
Incremental Delay, d2	7.4	1.0		6.6	0.7		4.6	2.8		4.5	1.4	0.1
Delay (s)	50.3	17.8		49.5	16.8		44.4	38.7		46.8	39.5	35.5
Level of Service	D	B		D	B		D	D		D	D	D
Approach Delay (s)		21.1			20.6			41.0			40.1	
Approach LOS		C			C			D			D	

Intersection Summary			
HCM Average Control Delay	26.9	HCM Level of Service	C
HCM Volume to Capacity ratio	0.55		
Actuated Cycle Length (s)	96.0	Sum of lost time (s)	16.0
Intersection Capacity Utilization	53.2%	ICU Level of Service	A
Analysis Period (min)	15		

c Critical Lane Group

Movement	EBL	EBR	NBL	NBT	SBT	SBR
Lane Configurations						
Volume (veh/h)	0	71	155	180	110	0
Sign Control	Stop			Free	Free	
Grade	0%			0%	0%	
Peak Hour Factor	0.92	0.92	0.92	0.92	0.92	0.92
Hourly flow rate (vph)	0	77	168	196	120	0
Pedestrians						
Lane Width (ft)						
Walking Speed (ft/s)						
Percent Blockage						
Right turn flare (veh)						
Median type				None	None	
Median storage veh)						
Upstream signal (ft)						
pX, platoon unblocked						
vC, conflicting volume	652	120	120			
vC1, stage 1 conf vol						
vC2, stage 2 conf vol						
vCu, unblocked vol	652	120	120			
tC, single (s)	6.4	6.2	4.1			
tC, 2 stage (s)						
tF (s)	3.5	3.3	2.2			
p0 queue free %	100	92	89			
cM capacity (veh/h)	383	932	1468			

Direction, Lane #	EB 1	NB 1	NB 2	SB 1	SB 2
Volume Total	77	168	196	120	0
Volume Left	0	168	0	0	0
Volume Right	77	0	0	0	0
cSH	932	1468	1700	1700	1700
Volume to Capacity	0.08	0.11	0.12	0.07	0.00
Queue Length 95th (ft)	7	10	0	0	0
Control Delay (s)	9.2	7.8	0.0	0.0	0.0
Lane LOS	A	A			
Approach Delay (s)	9.2	3.6		0.0	
Approach LOS	A				

Intersection Summary			
Average Delay	3.6		
Intersection Capacity Utilization	26.3%	ICU Level of Service	A
Analysis Period (min)	15		

Movement	WBL	WBR	NBT	NBR	SBL	SBT
Lane Configurations						
Volume (veh/h)	26	0	140	58	0	60
Sign Control	Stop		Free			Free
Grade	0%		0%			0%
Peak Hour Factor	0.92	0.92	0.92	0.92	0.92	0.92
Hourly flow rate (vph)	28	0	152	63	0	65
Pedestrians						
Lane Width (ft)						
Walking Speed (ft/s)						
Percent Blockage						
Right turn flare (veh)						
Median type			None			None
Median storage veh)						
Upstream signal (ft)						
pX, platoon unblocked						
vC, conflicting volume	249	184			215	
vC1, stage 1 conf vol						
vC2, stage 2 conf vol						
vCu, unblocked vol	249	184			215	
tC, single (s)	6.4	6.2			4.1	
tC, 2 stage (s)						
tF (s)	3.5	3.3			2.2	
p0 queue free %	96	100			100	
cM capacity (veh/h)	740	859			1355	

Direction, Lane #	WB 1	NB 1	SB 1
Volume Total	28	215	65
Volume Left	28	0	0
Volume Right	0	63	0
cSH	740	1700	1355
Volume to Capacity	0.04	0.13	0.00
Queue Length 95th (ft)	3	0	0
Control Delay (s)	10.1	0.0	0.0
Lane LOS	B		
Approach Delay (s)	10.1	0.0	0.0
Approach LOS	B		

Intersection Summary			
Average Delay	0.9		
Intersection Capacity Utilization	20.9%	ICU Level of Service	A
Analysis Period (min)	15		

Movement	EBL	EBT	EBR	WBL	WBT	WBR	NBL	NBT	NBR	SBL	SBT	SBR
Lane Configurations												
Volume (veh/h)	20	40	50	90	20	330	20	153	70	125	104	10
Sign Control		Stop			Stop			Free			Free	
Grade		0%			0%			0%			0%	
Peak Hour Factor	0.90	0.90	0.90	0.90	0.90	0.90	0.90	0.90	0.90	0.90	0.90	0.90
Hourly flow rate (vph)	22	44	56	100	22	367	22	170	78	139	116	11
Pedestrians												
Lane Width (ft)												
Walking Speed (ft/s)												
Percent Blockage												
Right turn flare (veh)												
Median type								None			None	
Median storage veh)												
Upstream signal (ft)												
pX, platoon unblocked												
vC, conflicting volume	1030	691	121	730	658	209	127			248		
vC1, stage 1 conf vol												
vC2, stage 2 conf vol												
vCu, unblocked vol	1030	691	121	730	658	209	127			248		
tC, single (s)	7.1	6.5	6.2	7.1	6.5	6.2	4.1			4.1		
tC, 2 stage (s)												
tF (s)	3.5	4.0	3.3	3.5	4.0	3.3	2.2			2.2		
p0 queue free %	79	86	94	62	93	56	98			89		
cM capacity (veh/h)	104	326	936	261	341	837	1460			1318		

Direction, Lane #	EB 1	WB 1	NB 1	SB 1
Volume Total	122	489	270	266
Volume Left	22	100	22	139
Volume Right	56	367	78	11
cSH	298	552	1460	1318
Volume to Capacity	0.41	0.89	0.02	0.11
Queue Length 95th (ft)	48	254	1	9
Control Delay (s)	25.2	43.0	0.7	4.6
Lane LOS	D	E	A	A
Approach Delay (s)	25.2	43.0	0.7	4.6
Approach LOS	D	E		

Intersection Summary			
Average Delay	22.3		
Intersection Capacity Utilization	69.5%	ICU Level of Service	C
Analysis Period (min)	15		

Movement	EBL	EBR	NBL	NBT	SBT	SBR
Lane Configurations						
Volume (vph)	50	680	550	193	154	80
Ideal Flow (vphpl)	1900	1900	1900	1900	1900	1900
Total Lost time (s)	4.0	4.0	4.0	4.0	4.0	
Lane Util. Factor	1.00	1.00	1.00	1.00	1.00	
Frt	1.00	0.85	1.00	1.00	0.95	
Flt Protected	0.95	1.00	0.95	1.00	1.00	
Satd. Flow (prot)	1787	1599	1805	1900	1794	
Flt Permitted	0.95	1.00	0.95	1.00	1.00	
Satd. Flow (perm)	1787	1599	1805	1900	1794	
Peak-hour factor, PHF	0.98	0.98	0.98	0.98	0.98	0.98
Adj. Flow (vph)	51	694	561	197	157	82
RTOR Reduction (vph)	0	581	0	0	31	0
Lane Group Flow (vph)	51	113	561	197	208	0
Heavy Vehicles (%)	1%	1%	0%	0%	1%	1%
Turn Type		Perm	Prot			
Protected Phases	2		3	8	4	
Permitted Phases		2				
Actuated Green, G (s)	8.6	8.6	20.3	35.8	11.0	
Effective Green, g (s)	8.6	8.6	20.8	36.3	11.5	
Actuated g/C Ratio	0.16	0.16	0.39	0.69	0.22	
Clearance Time (s)	4.0	4.0	4.5	4.5	4.5	
Vehicle Extension (s)	2.0	2.0	2.0	2.5	2.5	
Lane Grp Cap (vph)	291	260	710	1304	390	
v/s Ratio Prot	0.03		c0.31	0.10	c0.12	
v/s Ratio Perm		c0.07				
v/c Ratio	0.18	0.43	0.79	0.15	0.53	
Uniform Delay, d1	19.1	20.0	14.1	2.9	18.3	
Progression Factor	1.00	1.00	1.00	1.00	1.00	
Incremental Delay, d2	0.1	0.4	5.6	0.0	1.1	
Delay (s)	19.2	20.4	19.7	2.9	19.4	
Level of Service	B	C	B	A	B	
Approach Delay (s)	20.3			15.4	19.4	
Approach LOS	C			B	B	

Intersection Summary			
HCM Average Control Delay	18.0	HCM Level of Service	B
HCM Volume to Capacity ratio	0.64		
Actuated Cycle Length (s)	52.9	Sum of lost time (s)	12.0
Intersection Capacity Utilization	61.8%	ICU Level of Service	B
Analysis Period (min)	15		

c Critical Lane Group

Movement	EBL	EBT	EBR	WBL	WBT	WBR	NBL	NBT	NBR	SBL	SBT	SBR
Lane Configurations												
Volume (vph)	103	550	560	200	420	136	530	507	160	193	541	102
Ideal Flow (vphpl)	1900	1900	1900	1900	1900	1900	1900	1900	1900	1900	1900	1900
Total Lost time (s)	4.0	4.0	4.0	4.0	4.0		4.0	4.0	4.0	4.0	4.0	
Lane Util. Factor	1.00	0.95	1.00	1.00	0.95		0.94	0.95	1.00	1.00	0.95	
Frt	1.00	1.00	0.85	1.00	0.96		1.00	1.00	0.85	1.00	0.98	
Flt Protected	0.95	1.00	1.00	0.95	1.00		0.95	1.00	1.00	0.95	1.00	
Satd. Flow (prot)	1805	3610	1615	1805	3478		5090	3610	1615	1787	3489	
Flt Permitted	0.95	1.00	1.00	0.95	1.00		0.95	1.00	1.00	0.95	1.00	
Satd. Flow (perm)	1805	3610	1615	1805	3478		5090	3610	1615	1787	3489	
Peak-hour factor, PHF	0.97	0.97	0.97	0.97	0.97	0.97	0.97	0.97	0.97	0.97	0.97	0.97
Adj. Flow (vph)	106	567	577	206	433	140	546	523	165	199	558	105
RTOR Reduction (vph)	0	0	342	0	32	0	0	0	130	0	17	0
Lane Group Flow (vph)	106	567	235	206	541	0	546	523	35	199	646	0
Heavy Vehicles (%)	0%	0%	0%	0%	0%	0%	0%	0%	0%	1%	1%	1%
Turn Type	Prot		Perm	Prot			Prot		Perm	Prot		
Protected Phases	7	4		3	8		5	2		1	6	
Permitted Phases			4						2			
Actuated Green, G (s)	7.9	19.3	19.3	12.4	23.8		12.7	15.6	15.6	12.3	15.2	
Effective Green, g (s)	9.4	20.8	20.8	13.9	25.3		14.2	17.1	17.1	13.8	16.7	
Actuated g/C Ratio	0.12	0.25	0.25	0.17	0.31		0.17	0.21	0.21	0.17	0.20	
Clearance Time (s)	5.5	5.5	5.5	5.5	5.5		5.5	5.5	5.5	5.5	5.5	
Vehicle Extension (s)	2.0	3.0	3.0	2.0	3.0		2.0	3.0	3.0	2.0	3.0	
Lane Grp Cap (vph)	208	920	412	307	1078		886	757	338	302	714	
v/s Ratio Prot	0.06	c0.16		c0.11	0.16		0.11	0.14		c0.11	c0.18	
v/s Ratio Perm			0.15						0.02			
v/c Ratio	0.51	0.62	0.57	0.67	0.50		0.62	0.69	0.10	0.66	0.90	
Uniform Delay, d1	33.9	26.9	26.5	31.7	23.0		31.2	29.8	26.1	31.7	31.7	
Progression Factor	1.00	1.00	1.00	1.00	1.00		1.00	1.00	1.00	1.00	1.00	
Incremental Delay, d2	0.7	1.2	1.9	4.5	0.4		0.9	2.7	0.1	3.9	14.8	
Delay (s)	34.7	28.1	28.4	36.2	23.4		32.1	32.5	26.2	35.6	46.5	
Level of Service	C	C	C	D	C		C	C	C	D	D	
Approach Delay (s)		28.8			26.8			31.5			44.0	
Approach LOS		C			C			C			D	

Intersection Summary			
HCM Average Control Delay	32.4	HCM Level of Service	C
HCM Volume to Capacity ratio	0.71		
Actuated Cycle Length (s)	81.6	Sum of lost time (s)	16.0
Intersection Capacity Utilization	74.0%	ICU Level of Service	D
Analysis Period (min)	15		

c Critical Lane Group

Level Of Service Computation Report
2000 HCM 4-Way Stop Method (Future Volume Alternative)

****

Intersection #4 Larch Rd/Tracy Blvd

****

Cycle (sec): 100 Critical Vol./Cap.(X): 2.575
Loss Time (sec): 0 (Y+R=4.0 sec) Average Delay (sec/veh): 340.2
Optimal Cycle: 0 Level Of Service: F

****

Street Name:	Tracy Blvd						Larch Rd					
Approach:	North Bound			South Bound			East Bound			West Bound		
Movement:	L - T - R			L - T - R			L - T - R			L - T - R		
Control:	Stop Sign			Stop Sign			Stop Sign			Stop Sign		
Rights:	Include			Include			Include			Include		
Min. Green:	0	0	0	0	0	0	0	0	0	0	0	0
Lanes:	1 0 1	0 1		1 0	0 1	0	0 0	1! 0	0	0 1	0 0	1
Volume Module:												
Base Vol:	90	120	70	10	90	10	10	50	70	100	50	10
Growth Adj:	1.00	1.00	1.00	1.00	1.00	1.00	1.00	1.00	1.00	1.00	1.00	1.00
Initial Bse:	90	120	70	10	90	10	10	50	70	100	50	10
Added Vol:	300	808	0	32	332	0	0	0	115	0	0	67
PasserByVol:	0	0	0	0	0	0	0	0	0	0	0	0
Initial Fut:	390	928	70	42	422	10	10	50	185	100	50	77
User Adj:	1.00	1.00	1.00	1.00	1.00	1.00	1.00	1.00	1.00	1.00	1.00	1.00
PHF Adj:	0.86	0.86	0.86	0.86	0.86	0.86	0.86	0.86	0.86	0.86	0.86	0.86
PHF Volume:	453	1079	81	49	491	12	12	58	215	116	58	90
Reduct Vol:	0	0	0	0	0	0	0	0	0	0	0	0
Reduced Vol:	453	1079	81	49	491	12	12	58	215	116	58	90
PCE Adj:	1.00	1.00	1.00	1.00	1.00	1.00	1.00	1.00	1.00	1.00	1.00	1.00
MLF Adj:	1.00	1.00	1.00	1.00	1.00	1.00	1.00	1.00	1.00	1.00	1.00	1.00
FinalVolume:	453	1079	81	49	491	12	12	58	215	116	58	90
Saturation Flow Module:												
Adjustment:	1.00	1.00	1.00	1.00	1.00	1.00	1.00	1.00	1.00	1.00	1.00	1.00
Lanes:	1.00	1.00	1.00	1.00	0.98	0.02	0.04	0.20	0.76	0.67	0.33	1.00
Final Sat.:	396	419	452	399	416	10	18	88	324	253	127	427
Capacity Analysis Module:												
Vol/Sat:	1.15	2.57	0.18	0.12	1.18	1.18	0.66	0.66	0.66	0.46	0.46	0.21
Crit Moves:	****					****		****			****	
Delay/Veh:	119.8	733	12.3	12.9	129	129.0	26.1	26.1	26.1	19.5	19.5	13.1
Delay Adj:	1.00	1.00	1.00	1.00	1.00	1.00	1.00	1.00	1.00	1.00	1.00	1.00
AdjDel/Veh:	119.8	733	12.3	12.9	129	129.0	26.1	26.1	26.1	19.5	19.5	13.1
LOS by Move:	F	F	B	B	F	F	D	D	D	C	C	B
ApproachDel:	524.1			118.7			26.1			17.3		
Delay Adj:	1.00			1.00			1.00			1.00		
ApprAdjDel:	524.1			118.7			26.1			17.3		
LOS by Appr:	F			F			D			C		
AllWayAvgQ:	11.9	84.0	0.2	0.1	13.9	13.9	1.8	1.8	1.8	0.8	0.8	0.3

****

Note: Queue reported is the number of cars per lane.

****

Movement	EBL	EBT	EBR	WBL	WBT	WBR	NBL	NBT	NBR	SBL	SBT	SBR
Lane Configurations												
Volume (vph)	0	0	0	350	0	813	210	675	0	0	668	169
Ideal Flow (vphpl)	1900	1900	1900	1900	1900	1900	1900	1900	1900	1900	1900	1900
Total Lost time (s)					4.0	4.0	4.0	4.0			4.0	
Lane Util. Factor					1.00	1.00	1.00	0.95			0.95	
Frt					1.00	0.85	1.00	1.00			0.97	
Flt Protected					0.95	1.00	0.95	1.00			1.00	
Satd. Flow (prot)					1787	1599	1787	3574			3466	
Flt Permitted					0.95	1.00	0.95	1.00			1.00	
Satd. Flow (perm)					1787	1599	1787	3574			3466	
Peak-hour factor, PHF	0.95	0.95	0.95	0.95	0.95	0.95	0.95	0.95	0.95	0.95	0.95	0.95
Adj. Flow (vph)	0	0	0	368	0	856	221	711	0	0	703	178
RTOR Reduction (vph)	0	0	0	0	0	143	0	0	0	0	22	0
Lane Group Flow (vph)	0	0	0	0	368	713	221	711	0	0	859	0
Heavy Vehicles (%)	0%	0%	0%	1%	1%	1%	1%	1%	1%	1%	1%	1%
Turn Type				Perm		Perm	Prot					
Protected Phases					8		5	2			6	
Permitted Phases				8		8						
Actuated Green, G (s)					36.5	36.5	16.4	50.2			29.8	
Effective Green, g (s)					36.5	36.5	16.4	51.1			30.7	
Actuated g/C Ratio					0.38	0.38	0.17	0.53			0.32	
Clearance Time (s)					4.0	4.0	4.0	4.9			4.9	
Vehicle Extension (s)					3.0	3.0	3.0	3.0			3.0	
Lane Grp Cap (vph)					682	610	307	1910			1113	
v/s Ratio Prot							c0.12	0.20			c0.25	
v/s Ratio Perm					0.21	c0.45						
v/c Ratio					0.54	1.17	0.72	0.37			0.77	
Uniform Delay, d1					23.0	29.5	37.4	12.9			29.3	
Progression Factor					1.00	1.00	1.00	1.00			1.00	
Incremental Delay, d2					0.8	92.5	7.9	0.1			3.4	
Delay (s)					23.8	122.0	45.3	13.1			32.7	
Level of Service					C	F	D	B			C	
Approach Delay (s)		0.0			92.5			20.7			32.7	
Approach LOS		A			F			C			C	

Intersection Summary			
HCM Average Control Delay	53.1	HCM Level of Service	D
HCM Volume to Capacity ratio	0.93		
Actuated Cycle Length (s)	95.6	Sum of lost time (s)	12.0
Intersection Capacity Utilization	75.7%	ICU Level of Service	D
Analysis Period (min)	15		

c Critical Lane Group

Movement	EBL	EBT	EBR	WBL	WBT	WBR	NBL	NBT	NBR	SBL	SBT	SBR
Lane Configurations												
Volume (vph)	244	0	190	0	0	0	0	641	300	369	649	0
Ideal Flow (vphpl)	1900	1900	1900	1900	1900	1900	1900	1900	1900	1900	1900	1900
Total Lost time (s)		4.0	4.0					4.0		4.0	4.0	
Lane Util. Factor		1.00	1.00					0.95		1.00	0.95	
Frt		1.00	0.85					0.95		1.00	1.00	
Flt Protected		0.95	1.00					1.00		0.95	1.00	
Satd. Flow (prot)		1787	1599					3403		1787	3574	
Flt Permitted		0.95	1.00					1.00		0.95	1.00	
Satd. Flow (perm)		1787	1599					3403		1787	3574	
Peak-hour factor, PHF	0.91	0.91	0.91	0.91	0.91	0.91	0.91	0.91	0.91	0.91	0.91	0.91
Adj. Flow (vph)	268	0	209	0	0	0	0	704	330	405	713	0
RTOR Reduction (vph)	0	0	146	0	0	0	0	55	0	0	0	0
Lane Group Flow (vph)	0	268	63	0	0	0	0	979	0	405	713	0
Heavy Vehicles (%)	1%	1%	1%	0%	0%	0%	1%	1%	1%	1%	1%	1%
Turn Type	Perm		Perm							Prot		
Protected Phases		4						2		1	6	
Permitted Phases	4		4									
Actuated Green, G (s)		18.4	18.4					30.3		21.5	55.8	
Effective Green, g (s)		19.3	19.3					31.2		21.5	56.7	
Actuated g/C Ratio		0.23	0.23					0.37		0.26	0.68	
Clearance Time (s)		4.9	4.9					4.9		4.0	4.9	
Vehicle Extension (s)		3.0	3.0					3.0		3.0	3.0	
Lane Grp Cap (vph)		411	367					1264		457	2412	
v/s Ratio Prot								c0.29		c0.23	0.20	
v/s Ratio Perm		0.15	0.04									
v/c Ratio		0.65	0.17					0.77		0.89	0.30	
Uniform Delay, d1		29.3	25.9					23.3		30.1	5.5	
Progression Factor		1.00	1.00					1.00		1.00	1.00	
Incremental Delay, d2		3.7	0.2					3.0		18.3	0.1	
Delay (s)		33.0	26.2					26.3		48.3	5.6	
Level of Service		C	C					C		D	A	
Approach Delay (s)		30.0			0.0			26.3			21.1	
Approach LOS		C			A			C			C	

Intersection Summary			
HCM Average Control Delay	24.8	HCM Level of Service	C
HCM Volume to Capacity ratio	0.78		
Actuated Cycle Length (s)	84.0	Sum of lost time (s)	12.0
Intersection Capacity Utilization	75.7%	ICU Level of Service	D
Analysis Period (min)	15		

c Critical Lane Group

Movement	EBL	EBT	EBR	WBL	WBT	WBR	NBL	NBT	NBR	SBL	SBT	SBR
Lane Configurations												
Volume (vph)	196	420	160	130	320	147	230	675	110	198	662	163
Ideal Flow (vphpl)	1900	1900	1900	1900	1900	1900	1900	1900	1900	1900	1900	1900
Total Lost time (s)	4.0	4.0		4.0	4.0		4.0	4.0		4.0	4.0	
Lane Util. Factor	1.00	0.95		1.00	0.95		1.00	0.95		1.00	0.95	
Frt	1.00	0.96		1.00	0.95		1.00	0.98		1.00	0.97	
Flt Protected	0.95	1.00		0.95	1.00		0.95	1.00		0.95	1.00	
Satd. Flow (prot)	1805	3461		1787	3405		1787	3499		1787	3468	
Flt Permitted	0.95	1.00		0.95	1.00		0.95	1.00		0.95	1.00	
Satd. Flow (perm)	1805	3461		1787	3405		1787	3499		1787	3468	
Peak-hour factor, PHF	0.97	0.97	0.97	0.97	0.97	0.97	0.97	0.97	0.97	0.97	0.97	0.97
Adj. Flow (vph)	202	433	165	134	330	152	237	696	113	204	682	168
RTOR Reduction (vph)	0	41	0	0	59	0	0	11	0	0	19	0
Lane Group Flow (vph)	202	557	0	134	423	0	237	798	0	204	831	0
Heavy Vehicles (%)	0%	0%	0%	1%	1%	1%	1%	1%	1%	1%	1%	1%
Turn Type	Prot			Prot			Prot			Prot		
Protected Phases	5	2		1	6		3	8		7	4	
Permitted Phases												
Actuated Green, G (s)	13.8	20.1		10.6	16.9		15.4	32.7		14.1	31.4	
Effective Green, g (s)	14.3	21.1		11.1	17.9		15.9	33.2		14.6	31.9	
Actuated g/C Ratio	0.15	0.22		0.12	0.19		0.17	0.35		0.15	0.33	
Clearance Time (s)	4.5	5.0		4.5	5.0		4.5	4.5		4.5	4.5	
Vehicle Extension (s)	1.0	3.0		1.0	3.0		1.0	3.0		1.0	3.0	
Lane Grp Cap (vph)	269	761		207	635		296	1210		272	1152	
v/s Ratio Prot	c0.11	c0.16		0.07	0.12		c0.13	0.23		0.11	c0.24	
v/s Ratio Perm												
v/c Ratio	0.75	0.73		0.65	0.67		0.80	0.66		0.75	0.72	
Uniform Delay, d1	39.1	34.8		40.6	36.3		38.5	26.6		39.0	28.1	
Progression Factor	1.00	1.00		1.00	1.00		1.00	1.00		1.00	1.00	
Incremental Delay, d2	10.0	3.6		5.1	2.7		13.6	2.8		9.9	3.9	
Delay (s)	49.1	38.5		45.7	38.9		52.1	29.4		48.8	32.1	
Level of Service	D	D		D	D		D	C		D	C	
Approach Delay (s)		41.2			40.4			34.6			35.3	
Approach LOS		D			D			C			D	

Intersection Summary			
HCM Average Control Delay	37.3	HCM Level of Service	D
HCM Volume to Capacity ratio	0.76		
Actuated Cycle Length (s)	96.0	Sum of lost time (s)	16.0
Intersection Capacity Utilization	74.0%	ICU Level of Service	D
Analysis Period (min)	15		

c Critical Lane Group

Movement	EBL	EBT	EBR	WBL	WBT	WBR	NBL	NBT	NBR	SBL	SBT	SBR
Lane Configurations												
Volume (veh/h)	40	10	82	10	10	10	107	30	10	10	40	20
Sign Control		Stop			Stop			Free			Free	
Grade		0%			0%			0%			0%	
Peak Hour Factor	0.94	0.94	0.94	0.94	0.94	0.94	0.94	0.94	0.94	0.94	0.94	0.94
Hourly flow rate (vph)	43	11	87	11	11	11	114	32	11	11	43	21
Pedestrians												
Lane Width (ft)												
Walking Speed (ft/s)												
Percent Blockage												
Right turn flare (veh)												
Median type								None			None	
Median storage veh)												
Upstream signal (ft)												
pX, platoon unblocked												
vC, conflicting volume	355	345	53	432	350	37	64			43		
vC1, stage 1 conf vol												
vC2, stage 2 conf vol												
vCu, unblocked vol	355	345	53	432	350	37	64			43		
tC, single (s)	7.1	6.5	6.2	7.1	6.5	6.2	4.1			4.1		
tC, 2 stage (s)												
tF (s)	3.5	4.0	3.3	3.5	4.0	3.3	2.2			2.2		
p0 queue free %	92	98	91	98	98	99	93			99		
cM capacity (veh/h)	550	533	1017	454	531	1041	1532			1573		

Direction, Lane #	EB 1	EB 2	WB 1	NB 1	SB 1
Volume Total	43	98	32	156	74
Volume Left	43	0	11	114	11
Volume Right	0	87	11	11	21
cSH	550	926	594	1532	1573
Volume to Capacity	0.08	0.11	0.05	0.07	0.01
Queue Length 95th (ft)	6	9	4	6	1
Control Delay (s)	12.1	9.3	11.4	5.6	1.1
Lane LOS	B	A	B	A	A
Approach Delay (s)	10.2		11.4	5.6	1.1
Approach LOS	B		B		

Intersection Summary			
Average Delay	6.8		
Intersection Capacity Utilization	29.8%	ICU Level of Service	A
Analysis Period (min)	15		

Movement	EBL	EBT	EBR	WBL	WBT	WBR	NBL	NBT	NBR	SBL	SBT	SBR
Lane Configurations												
Volume (vph)	60	506	110	40	402	50	80	131	30	90	144	70
Ideal Flow (vphpl)	1900	1900	1900	1900	1900	1900	1900	1900	1900	1900	1900	1900
Total Lost time (s)	4.0	4.0		4.0	4.0		4.0	4.0	4.0	4.0	4.0	4.0
Lane Util. Factor	1.00	0.95		1.00	0.95		1.00	1.00	1.00	1.00	1.00	1.00
Frt	1.00	0.97		1.00	0.98		1.00	1.00	0.85	1.00	1.00	0.85
Flt Protected	0.95	1.00		0.95	1.00		0.95	1.00	1.00	0.95	1.00	1.00
Satd. Flow (prot)	1805	3514		1805	3551		1805	1900	1615	1805	1900	1615
Flt Permitted	0.95	1.00		0.95	1.00		0.95	1.00	1.00	0.95	1.00	1.00
Satd. Flow (perm)	1805	3514		1805	3551		1805	1900	1615	1805	1900	1615
Peak-hour factor, PHF	0.87	0.87	0.87	0.87	0.87	0.87	0.87	0.87	0.87	0.87	0.87	0.87
Adj. Flow (vph)	69	582	126	46	462	57	92	151	34	103	166	80
RTOR Reduction (vph)	0	17	0	0	9	0	0	0	29	0	0	65
Lane Group Flow (vph)	69	691	0	46	510	0	92	151	5	103	166	15
Heavy Vehicles (%)	0%	0%	0%	0%	0%	0%	0%	0%	0%	0%	0%	0%
Turn Type	Prot			Prot			Prot		Perm	Prot		Perm
Protected Phases	1	6		5	2		3	8		7	4	
Permitted Phases									8			4
Actuated Green, G (s)	3.5	21.0		3.1	20.6		5.5	7.6	7.6	5.8	7.9	7.9
Effective Green, g (s)	4.0	21.5		3.6	21.1		6.0	8.1	8.1	6.3	8.4	8.4
Actuated g/C Ratio	0.07	0.39		0.06	0.38		0.11	0.15	0.15	0.11	0.15	0.15
Clearance Time (s)	4.5	4.5		4.5	4.5		4.5	4.5	4.5	4.5	4.5	4.5
Vehicle Extension (s)	1.0	3.0		1.0	3.0		1.0	2.0	2.0	1.0	2.0	2.0
Lane Grp Cap (vph)	130	1361		117	1350		195	277	236	205	288	244
v/s Ratio Prot	c0.04	c0.20		0.03	0.14		0.05	0.08		c0.06	c0.09	
v/s Ratio Perm									0.00			0.01
v/c Ratio	0.53	0.51		0.39	0.38		0.47	0.55	0.02	0.50	0.58	0.06
Uniform Delay, d1	24.8	13.0		24.9	12.5		23.3	22.0	20.3	23.1	21.9	20.2
Progression Factor	1.00	1.00		1.00	1.00		1.00	1.00	1.00	1.00	1.00	1.00
Incremental Delay, d2	2.1	0.3		0.8	0.2		0.7	1.2	0.0	0.7	1.7	0.0
Delay (s)	26.9	13.3		25.7	12.6		23.9	23.2	20.3	23.8	23.6	20.2
Level of Service	C	B		C	B		C	C	C	C	C	C
Approach Delay (s)		14.5			13.7			23.1			22.9	
Approach LOS		B			B			C			C	

Intersection Summary			
HCM Average Control Delay	17.0	HCM Level of Service	B
HCM Volume to Capacity ratio	0.44		
Actuated Cycle Length (s)	55.5	Sum of lost time (s)	8.0
Intersection Capacity Utilization	48.4%	ICU Level of Service	A
Analysis Period (min)	15		

c Critical Lane Group

Movement	EBL	EBT	EBR	WBL	WBT	WBR	NBL	NBT	NBR	SBL	SBT	SBR
Lane Configurations												
Volume (vph)	416	590	300	310	480	326	580	1176	180	303	1042	153
Ideal Flow (vphpl)	1900	1900	1900	1900	1900	1900	1900	1900	1900	1900	1900	1900
Total Lost time (s)	4.0	4.0	4.0	4.0	4.0	4.0	4.0	4.0	4.0	4.0	4.0	4.0
Lane Util. Factor	0.97	0.91	1.00	0.97	0.91	1.00	0.97	0.95	1.00	0.97	0.95	1.00
Frt	1.00	1.00	0.85	1.00	1.00	0.85	1.00	1.00	0.85	1.00	1.00	0.85
Flt Protected	0.95	1.00	1.00	0.95	1.00	1.00	0.95	1.00	1.00	0.95	1.00	1.00
Satd. Flow (prot)	3502	5187	1615	3502	5187	1615	3502	3610	1615	3502	3610	1615
Flt Permitted	0.95	1.00	1.00	0.95	1.00	1.00	0.95	1.00	1.00	0.95	1.00	1.00
Satd. Flow (perm)	3502	5187	1615	3502	5187	1615	3502	3610	1615	3502	3610	1615
Peak-hour factor, PHF	0.97	0.97	0.97	0.97	0.97	0.97	0.97	0.97	0.97	0.97	0.97	0.97
Adj. Flow (vph)	429	608	309	320	495	336	598	1212	186	312	1074	158
RTOR Reduction (vph)	0	0	0	0	0	226	0	0	60	0	0	63
Lane Group Flow (vph)	429	608	309	320	495	110	598	1212	126	312	1074	95
Heavy Vehicles (%)	0%	0%	0%	0%	0%	0%	0%	0%	0%	0%	0%	0%
Turn Type	Prot		Free	Prot		Perm	Prot		Perm	Prot		Perm
Protected Phases	5	2		1	6		7	4		3	8	
Permitted Phases			Free			6			4			8
Actuated Green, G (s)	14.6	17.9	98.3	13.3	16.6	16.6	15.0	31.9	31.9	13.2	30.1	30.1
Effective Green, g (s)	15.6	19.9	98.3	14.3	18.6	18.6	16.0	33.9	33.9	14.2	32.1	32.1
Actuated g/C Ratio	0.16	0.20	1.00	0.15	0.19	0.19	0.16	0.34	0.34	0.14	0.33	0.33
Clearance Time (s)	5.0	6.0		5.0	6.0	6.0	5.0	6.0	6.0	5.0	6.0	6.0
Vehicle Extension (s)	3.0	3.0		3.0	3.0	3.0	3.0	3.0	3.0	3.0	3.0	3.0
Lane Grp Cap (vph)	556	1050	1615	509	981	306	570	1245	557	506	1179	527
v/s Ratio Prot	c0.12	c0.12		0.09	0.10		c0.17	c0.34		0.09	0.30	
v/s Ratio Perm			c0.19			0.07			0.08			0.06
v/c Ratio	0.77	0.58	0.19	0.63	0.50	0.36	1.05	0.97	0.23	0.62	0.91	0.18
Uniform Delay, d1	39.6	35.4	0.0	39.5	35.7	34.7	41.1	31.8	22.9	39.5	31.7	23.7
Progression Factor	1.00	1.00	1.00	1.00	1.00	1.00	1.00	1.00	1.00	1.00	1.00	1.00
Incremental Delay, d2	6.6	0.8	0.3	2.4	0.4	0.7	51.2	19.3	0.2	2.2	10.6	0.2
Delay (s)	46.2	36.2	0.3	41.9	36.1	35.4	92.4	51.1	23.1	41.7	42.3	23.9
Level of Service	D	D	A	D	D	D	F	D	C	D	D	C
Approach Delay (s)		31.1			37.5			60.8			40.3	
Approach LOS		C			D			E			D	

Intersection Summary			
HCM Average Control Delay	44.5	HCM Level of Service	D
HCM Volume to Capacity ratio	0.82		
Actuated Cycle Length (s)	98.3	Sum of lost time (s)	8.0
Intersection Capacity Utilization	79.8%	ICU Level of Service	D
Analysis Period (min)	15		

c Critical Lane Group

Movement	EBL	EBT	EBR	WBL	WBT	WBR	NBL	NBT	NBR	SBL	SBT	SBR
Lane Configurations												
Volume (vph)	202	560	330	130	520	152	290	490	90	120	457	176
Ideal Flow (vphpl)	1900	1900	1900	1900	1900	1900	1900	1900	1900	1900	1900	1900
Total Lost time (s)	4.0	4.0	4.0	4.0	4.0	4.0	4.0	4.0	4.0	4.0	4.0	4.0
Lane Util. Factor	0.97	0.95	1.00	0.97	0.95	1.00	0.97	0.95	1.00	0.97	0.95	1.00
Frt	1.00	1.00	0.85	1.00	1.00	0.85	1.00	1.00	0.85	1.00	1.00	0.85
Flt Protected	0.95	1.00	1.00	0.95	1.00	1.00	0.95	1.00	1.00	0.95	1.00	1.00
Satd. Flow (prot)	3502	3610	1615	3502	3610	1615	3502	3610	1615	3502	3610	1615
Flt Permitted	0.95	1.00	1.00	0.95	1.00	1.00	0.95	1.00	1.00	0.95	1.00	1.00
Satd. Flow (perm)	3502	3610	1615	3502	3610	1615	3502	3610	1615	3502	3610	1615
Peak-hour factor, PHF	0.96	0.96	0.96	0.96	0.96	0.96	0.96	0.96	0.96	0.96	0.96	0.96
Adj. Flow (vph)	210	583	344	135	542	158	302	510	94	125	476	183
RTOR Reduction (vph)	0	0	174	0	0	79	0	0	54	0	0	73
Lane Group Flow (vph)	210	583	170	135	542	79	302	510	40	125	476	110
Heavy Vehicles (%)	0%	0%	0%	0%	0%	0%	0%	0%	0%	0%	0%	0%
Turn Type	Prot		Perm	Prot		Perm	Prot		Perm	Prot		Perm
Protected Phases	5	2		1	6		3	8		7	4	
Permitted Phases			2			6			8			4
Actuated Green, G (s)	9.8	20.0	20.0	8.1	18.3	18.3	12.0	20.3	20.3	7.7	16.0	16.0
Effective Green, g (s)	10.3	21.5	21.5	8.6	19.8	19.8	12.5	21.8	21.8	8.2	17.5	17.5
Actuated g/C Ratio	0.14	0.28	0.28	0.11	0.26	0.26	0.16	0.29	0.29	0.11	0.23	0.23
Clearance Time (s)	4.5	5.5	5.5	4.5	5.5	5.5	4.5	5.5	5.5	4.5	5.5	5.5
Vehicle Extension (s)	2.0	2.5	2.5	2.0	2.5	2.5	2.0	2.0	2.0	2.0	2.0	2.0
Lane Grp Cap (vph)	474	1020	456	396	939	420	575	1034	463	377	830	371
v/s Ratio Prot	c0.06	c0.16		0.04	0.15		c0.09	0.14		0.04	c0.13	
v/s Ratio Perm			0.11			0.05			0.02			0.07
v/c Ratio	0.44	0.57	0.37	0.34	0.58	0.19	0.53	0.49	0.09	0.33	0.57	0.30
Uniform Delay, d1	30.3	23.4	21.9	31.1	24.5	21.9	29.1	22.6	19.9	31.4	26.0	24.2
Progression Factor	1.00	1.00	1.00	1.00	1.00	1.00	1.00	1.00	1.00	1.00	1.00	1.00
Incremental Delay, d2	0.2	0.6	0.4	0.2	0.7	0.2	0.4	0.1	0.0	0.2	0.6	0.2
Delay (s)	30.5	24.0	22.3	31.3	25.2	22.1	29.5	22.7	19.9	31.6	26.6	24.4
Level of Service	C	C	C	C	C	C	C	C	B	C	C	C
Approach Delay (s)		24.7			25.6			24.7			26.9	
Approach LOS		C			C			C			C	

Intersection Summary			
HCM Average Control Delay	25.4	HCM Level of Service	C
HCM Volume to Capacity ratio	0.52		
Actuated Cycle Length (s)	76.1	Sum of lost time (s)	12.0
Intersection Capacity Utilization	54.7%	ICU Level of Service	A
Analysis Period (min)	15		

c Critical Lane Group

Movement	EBL	EBT	EBR	WBL	WBT	WBR	NBL	NBT	NBR	SBL	SBT	SBR
Lane Configurations												
Volume (vph)	60	515	100	60	521	65	100	147	40	93	133	90
Ideal Flow (vphpl)	1900	1900	1900	1900	1900	1900	1900	1900	1900	1900	1900	1900
Total Lost time (s)	4.0	4.0		4.0	4.0		4.0	4.0		4.0	4.0	4.0
Lane Util. Factor	1.00	0.95		1.00	0.95		1.00	1.00		1.00	1.00	1.00
Frt	1.00	0.98		1.00	0.98		1.00	0.97		1.00	1.00	0.85
Flt Protected	0.95	1.00		0.95	1.00		0.95	1.00		0.95	1.00	1.00
Satd. Flow (prot)	1805	3522		1787	3515		1787	1821		1805	1900	1615
Flt Permitted	0.95	1.00		0.95	1.00		0.95	1.00		0.95	1.00	1.00
Satd. Flow (perm)	1805	3522		1787	3515		1787	1821		1805	1900	1615
Peak-hour factor, PHF	0.98	0.98	0.98	0.98	0.98	0.98	0.98	0.98	0.98	0.98	0.98	0.98
Adj. Flow (vph)	61	526	102	61	532	66	102	150	41	95	136	92
RTOR Reduction (vph)	0	14	0	0	8	0	0	9	0	0	0	67
Lane Group Flow (vph)	61	614	0	61	590	0	102	182	0	95	136	25
Heavy Vehicles (%)	0%	0%	0%	1%	1%	1%	1%	1%	1%	0%	0%	0%
Turn Type	Prot			Prot			Prot			Prot		Perm
Protected Phases	1	6		5	2		3	8		7	4	
Permitted Phases												4
Actuated Green, G (s)	4.0	20.2		4.0	20.2		6.8	11.7		6.6	11.5	11.5
Effective Green, g (s)	4.0	20.7		4.0	20.7		6.8	12.2		6.6	12.0	12.0
Actuated g/C Ratio	0.07	0.35		0.07	0.35		0.11	0.21		0.11	0.20	0.20
Clearance Time (s)	4.0	4.5		4.0	4.5		4.0	4.5		4.0	4.5	4.5
Vehicle Extension (s)	2.0	5.0		2.0	3.0		2.0	2.0		2.0	2.0	2.0
Lane Grp Cap (vph)	121	1225		120	1223		204	373		200	383	326
v/s Ratio Prot	0.03	c0.17		c0.03	0.17		c0.06	c0.10		0.05	0.07	
v/s Ratio Perm												0.02
v/c Ratio	0.50	0.50		0.51	0.48		0.50	0.49		0.47	0.36	0.08
Uniform Delay, d1	26.8	15.3		26.8	15.2		24.8	20.9		24.8	20.4	19.3
Progression Factor	1.00	1.00		1.00	1.00		1.00	1.00		1.00	1.00	1.00
Incremental Delay, d2	1.2	0.7		1.2	0.3		0.7	0.4		0.6	0.2	0.0
Delay (s)	28.0	16.0		28.0	15.5		25.5	21.3		25.5	20.6	19.3
Level of Service	C	B		C	B		C	C		C	C	B
Approach Delay (s)		17.1			16.7			22.7			21.7	
Approach LOS		B			B			C			C	

Intersection Summary			
HCM Average Control Delay	18.5	HCM Level of Service	B
HCM Volume to Capacity ratio	0.46		
Actuated Cycle Length (s)	59.5	Sum of lost time (s)	12.0
Intersection Capacity Utilization	49.4%	ICU Level of Service	A
Analysis Period (min)	15		

c Critical Lane Group

Movement	EBL	EBR	NBL	NBT	SBT	SBR
Lane Configurations						
Volume (veh/h)	0	364	875	140	110	0
Sign Control	Stop			Free	Free	
Grade	0%			0%	0%	
Peak Hour Factor	0.92	0.92	0.92	0.92	0.92	0.92
Hourly flow rate (vph)	0	396	951	152	120	0
Pedestrians						
Lane Width (ft)						
Walking Speed (ft/s)						
Percent Blockage						
Right turn flare (veh)						
Median type				None	None	
Median storage veh)						
Upstream signal (ft)						
pX, platoon unblocked						
vC, conflicting volume	2174	120	120			
vC1, stage 1 conf vol						
vC2, stage 2 conf vol						
vCu, unblocked vol	2174	120	120			
tC, single (s)	6.4	6.2	4.1			
tC, 2 stage (s)						
tF (s)	3.5	3.3	2.2			
p0 queue free %	100	58	35			
cM capacity (veh/h)	18	932	1468			

Direction, Lane #	EB 1	NB 1	NB 2	SB 1	SB 2
Volume Total	396	951	152	120	0
Volume Left	0	951	0	0	0
Volume Right	396	0	0	0	0
cSH	932	1468	1700	1700	1700
Volume to Capacity	0.42	0.65	0.09	0.07	0.00
Queue Length 95th (ft)	54	128	0	0	0
Control Delay (s)	11.7	11.8	0.0	0.0	0.0
Lane LOS	B	B			
Approach Delay (s)	11.7	10.2		0.0	
Approach LOS	B				

Intersection Summary			
Average Delay	9.8		
Intersection Capacity Utilization	84.3%	ICU Level of Service	E
Analysis Period (min)	15		

Movement	WBL	WBR	NBT	NBR	SBL	SBT
Lane Configurations						
Volume (veh/h)	168	0	90	413	0	70
Sign Control	Stop		Free			Free
Grade	0%		0%			0%
Peak Hour Factor	0.92	0.92	0.92	0.92	0.92	0.92
Hourly flow rate (vph)	183	0	98	449	0	76
Pedestrians						
Lane Width (ft)						
Walking Speed (ft/s)						
Percent Blockage						
Right turn flare (veh)						
Median type			None			None
Median storage veh)						
Upstream signal (ft)						
pX, platoon unblocked						
vC, conflicting volume	398	322			547	
vC1, stage 1 conf vol						
vC2, stage 2 conf vol						
vCu, unblocked vol	398	322			547	
tC, single (s)	6.4	6.2			4.1	
tC, 2 stage (s)						
tF (s)	3.5	3.3			2.2	
p0 queue free %	70	100			100	
cM capacity (veh/h)	607	719			1023	

Direction, Lane #	WB 1	NB 1	SB 1
Volume Total	183	547	76
Volume Left	183	0	0
Volume Right	0	449	0
cSH	607	1700	1023
Volume to Capacity	0.30	0.32	0.00
Queue Length 95th (ft)	32	0	0
Control Delay (s)	13.5	0.0	0.0
Lane LOS	B		
Approach Delay (s)	13.5	0.0	0.0
Approach LOS	B		

Intersection Summary			
Average Delay	3.1		
Intersection Capacity Utilization	46.2%	ICU Level of Service	A
Analysis Period (min)	15		

Movement	EBL	EBT	EBR	WBL	WBT	WBR	NBL	NBT	NBR	SBL	SBT	SBR
Lane Configurations												
Volume (veh/h)	20	60	80	70	30	47	40	130	90	14	63	10
Sign Control		Stop			Stop			Free			Free	
Grade		0%			0%			0%			0%	
Peak Hour Factor	0.82	0.82	0.82	0.82	0.82	0.82	0.82	0.82	0.82	0.82	0.82	0.82
Hourly flow rate (vph)	24	73	98	85	37	57	49	159	110	17	77	12
Pedestrians												
Lane Width (ft)												
Walking Speed (ft/s)												
Percent Blockage												
Right turn flare (veh)												
Median type								None			None	
Median storage veh)												
Upstream signal (ft)												
pX, platoon unblocked												
vC, conflicting volume	504	483	83	562	434	213	89			268		
vC1, stage 1 conf vol												
vC2, stage 2 conf vol												
vCu, unblocked vol	504	483	83	562	434	213	89			268		
tC, single (s)	7.1	6.5	6.2	7.1	6.5	6.2	4.1			4.1		
tC, 2 stage (s)												
tF (s)	3.5	4.0	3.3	3.5	4.0	3.3	2.2			2.2		
p0 queue free %	94	84	90	75	93	93	97			99		
cM capacity (veh/h)	409	464	982	337	495	832	1506			1295		

Direction, Lane #	EB 1	WB 1	WB 2	NB 1	SB 1
Volume Total	195	122	57	317	106
Volume Left	24	85	0	49	17
Volume Right	98	0	57	110	12
cSH	616	373	832	1506	1295
Volume to Capacity	0.32	0.33	0.07	0.03	0.01
Queue Length 95th (ft)	34	35	6	3	1
Control Delay (s)	13.5	19.3	9.6	1.4	1.3
Lane LOS	B	C	A	A	A
Approach Delay (s)	13.5	16.2		1.4	1.3
Approach LOS	B	C			

Intersection Summary			
Average Delay	7.7		
Intersection Capacity Utilization	43.8%	ICU Level of Service	A
Analysis Period (min)	15		

Movement	EBL	EBT	EBR	WBL	WBT	WBR	NBL	NBT	NBR	SBL	SBT	SBR
Lane Configurations												
Volume (vph)	10	80	74	160	70	50	77	275	120	23	147	10
Ideal Flow (vphpl)	1900	1900	1900	1900	1900	1900	1900	1900	1900	1900	1900	1900
Total Lost time (s)		4.0			4.0	4.0	4.0	4.0	4.0	4.0	4.0	
Lane Util. Factor		1.00			1.00	1.00	1.00	1.00	1.00	1.00	1.00	
Frt		0.94			1.00	0.85	1.00	1.00	0.85	1.00	0.99	
Flt Protected		1.00			0.97	1.00	0.95	1.00	1.00	0.95	1.00	
Satd. Flow (prot)		1727			1732	1524	1641	1727	1468	1583	1650	
Flt Permitted		0.98			0.71	1.00	0.95	1.00	1.00	0.95	1.00	
Satd. Flow (perm)		1691			1275	1524	1641	1727	1468	1583	1650	
Peak-hour factor, PHF	0.85	0.85	0.85	0.85	0.85	0.85	0.85	0.85	0.85	0.85	0.85	0.85
Adj. Flow (vph)	12	94	87	188	82	59	91	324	141	27	173	12
RTOR Reduction (vph)	0	53	0	0	0	31	0	0	88	0	4	0
Lane Group Flow (vph)	0	140	0	0	270	28	91	324	53	27	181	0
Heavy Vehicles (%)	3%	3%	3%	6%	6%	6%	10%	10%	10%	14%	14%	14%
Turn Type	Perm			Perm		Perm	Prot		Perm	Prot		
Protected Phases		4			8		5	2		1	6	
Permitted Phases	4			8		8			2			
Actuated Green, G (s)		15.2			15.2	15.2	4.3	17.0	17.0	1.2	13.9	
Effective Green, g (s)		15.2			15.2	15.2	4.3	17.0	17.0	1.2	13.9	
Actuated g/C Ratio		0.33			0.33	0.33	0.09	0.37	0.37	0.03	0.31	
Clearance Time (s)		4.0			4.0	4.0	4.0	4.0	4.0	4.0	4.0	
Vehicle Extension (s)		3.0			3.0	3.0	3.0	3.0	3.0	3.0	3.0	
Lane Grp Cap (vph)		566			427	510	155	647	550	42	505	
v/s Ratio Prot							c0.06	c0.19		0.02	0.11	
v/s Ratio Perm		0.08			c0.21	0.02			0.04			
v/c Ratio		0.25			0.63	0.05	0.59	0.50	0.10	0.64	0.36	
Uniform Delay, d1		10.9			12.7	10.2	19.7	10.9	9.2	21.9	12.3	
Progression Factor		1.00			1.00	1.00	1.00	1.00	1.00	1.00	1.00	
Incremental Delay, d2		0.2			3.0	0.0	5.6	0.6	0.1	29.0	0.4	
Delay (s)		11.2			15.8	10.3	25.3	11.5	9.3	50.9	12.7	
Level of Service		B			B	B	C	B	A	D	B	
Approach Delay (s)		11.2			14.8			13.2			17.6	
Approach LOS		B			B			B			B	

Intersection Summary			
HCM Average Control Delay	14.0	HCM Level of Service	B
HCM Volume to Capacity ratio	0.59		
Actuated Cycle Length (s)	45.4	Sum of lost time (s)	12.0
Intersection Capacity Utilization	53.0%	ICU Level of Service	A
Analysis Period (min)	15		

c Critical Lane Group

Movement	EBL	EBT	EBR	WBL	WBT	WBR	NBL	NBT	NBR	SBL	SBT	SBR
Lane Configurations												
Volume (veh/h)	20	40	50	90	20	330	20	153	70	125	104	10
Sign Control		Stop			Stop			Free			Free	
Grade		0%			0%			0%			0%	
Peak Hour Factor	0.90	0.90	0.90	0.90	0.90	0.90	0.90	0.90	0.90	0.90	0.90	0.90
Hourly flow rate (vph)	22	44	56	100	22	367	22	170	78	139	116	11
Pedestrians												
Lane Width (ft)												
Walking Speed (ft/s)												
Percent Blockage												
Right turn flare (veh)												
Median type								None			None	
Median storage veh)												
Upstream signal (ft)												
pX, platoon unblocked												
vC, conflicting volume	1030	691	121	730	658	209	127			248		
vC1, stage 1 conf vol												
vC2, stage 2 conf vol												
vCu, unblocked vol	1030	691	121	730	658	209	127			248		
tC, single (s)	7.1	6.5	6.2	7.1	6.5	6.2	4.1			4.1		
tC, 2 stage (s)												
tF (s)	3.5	4.0	3.3	3.5	4.0	3.3	2.2			2.2		
p0 queue free %	79	86	94	62	93	56	98			89		
cM capacity (veh/h)	104	326	936	261	341	837	1460			1318		

Direction, Lane #	EB 1	WB 1	WB 2	NB 1	SB 1
Volume Total	122	122	367	270	266
Volume Left	22	100	0	22	139
Volume Right	56	0	367	78	11
cSH	298	273	837	1460	1318
Volume to Capacity	0.41	0.45	0.44	0.02	0.11
Queue Length 95th (ft)	48	55	56	1	9
Control Delay (s)	25.2	28.5	12.6	0.7	4.6
Lane LOS	D	D	B	A	A
Approach Delay (s)	25.2	16.6		0.7	4.6
Approach LOS	D	C			

Intersection Summary			
Average Delay	11.0		
Intersection Capacity Utilization	50.1%	ICU Level of Service	A
Analysis Period (min)	15		

Movement	EBL	EBT	EBR	WBL	WBT	WBR	NBL	NBT	NBR	SBL	SBT	SBR
Lane Configurations												
Volume (vph)	10	50	185	100	50	77	390	928	70	42	422	10
Ideal Flow (vphpl)	1900	1900	1900	1900	1900	1900	1900	1900	1900	1900	1900	1900
Total Lost time (s)		4.0			4.0	4.0	4.0	4.0	4.0	4.0	4.0	
Lane Util. Factor		1.00			1.00	1.00	1.00	1.00	1.00	1.00	1.00	
Frt		0.90			1.00	0.85	1.00	1.00	0.85	1.00	1.00	
Flt Protected		1.00			0.97	1.00	0.95	1.00	1.00	0.95	1.00	
Satd. Flow (prot)		1703			1785	1583	1787	1881	1599	1787	1874	
Flt Permitted		0.99			0.39	1.00	0.95	1.00	1.00	0.95	1.00	
Satd. Flow (perm)		1683			723	1583	1787	1881	1599	1787	1874	
Peak-hour factor, PHF	0.86	0.86	0.86	0.86	0.86	0.86	0.86	0.86	0.86	0.86	0.86	0.86
Adj. Flow (vph)	12	58	215	116	58	90	453	1079	81	49	491	12
RTOR Reduction (vph)	0	108	0	0	0	40	0	0	24	0	1	0
Lane Group Flow (vph)	0	177	0	0	174	50	453	1079	57	49	502	0
Heavy Vehicles (%)	0%	0%	0%	3%	3%	2%	1%	1%	1%	1%	1%	2%
Turn Type	Perm			Perm		Perm	Prot		Perm	Prot		
Protected Phases		4			8		5	2		1	6	
Permitted Phases	4			8		8			2			
Actuated Green, G (s)		23.9			23.9	23.9	28.7	62.3	62.3	3.1	36.7	
Effective Green, g (s)		23.9			23.9	23.9	28.7	62.3	62.3	3.1	36.7	
Actuated g/C Ratio		0.24			0.24	0.24	0.28	0.62	0.62	0.03	0.36	
Clearance Time (s)		4.0			4.0	4.0	4.0	4.0	4.0	4.0	4.0	
Vehicle Extension (s)		3.0			3.0	3.0	3.0	3.0	3.0	3.0	3.0	
Lane Grp Cap (vph)		397			171	373	506	1157	983	55	679	
v/s Ratio Prot							c0.25	c0.57		0.03	0.27	
v/s Ratio Perm		0.10			c0.24	0.03			0.04			
v/c Ratio		0.44			1.02	0.13	0.90	0.93	0.06	0.89	0.74	
Uniform Delay, d1		33.0			38.7	30.5	34.9	17.6	7.8	48.9	28.1	
Progression Factor		1.00			1.00	1.00	1.00	1.00	1.00	1.00	1.00	
Incremental Delay, d2		0.8			73.5	0.2	18.1	13.3	0.0	82.3	4.2	
Delay (s)		33.8			112.2	30.7	53.0	30.9	7.8	131.2	32.4	
Level of Service		C			F	C	D	C	A	F	C	
Approach Delay (s)		33.8			84.4			35.9			41.2	
Approach LOS		C			F			D			D	

Intersection Summary			
HCM Average Control Delay	41.5	HCM Level of Service	D
HCM Volume to Capacity ratio	0.93		
Actuated Cycle Length (s)	101.3	Sum of lost time (s)	8.0
Intersection Capacity Utilization	88.2%	ICU Level of Service	E
Analysis Period (min)	15		

c Critical Lane Group

Movement	EBL	EBT	EBR	WBL	WBT	WBR	NBL	NBT	NBR	SBL	SBT	SBR
Lane Configurations												
Volume (veh/h)	30	1040	740	180	410	40	690	90	430	10	40	10
Sign Control		Stop			Stop			Free			Free	
Grade		0%			0%			0%			0%	
Peak Hour Factor	0.92	0.92	0.92	0.92	0.92	0.92	0.92	0.92	0.92	0.92	0.92	0.92
Hourly flow rate (vph)	33	1130	804	196	446	43	750	98	467	11	43	11
Pedestrians												
Lane Width (ft)												
Walking Speed (ft/s)												
Percent Blockage												
Right turn flare (veh)												
Median type								None			None	
Median storage veh)												
Upstream signal (ft)												
pX, platoon unblocked												
vC, conflicting volume	2168	2136	49	3272	1908	332	54			565		
vC1, stage 1 conf vol												
vC2, stage 2 conf vol												
vCu, unblocked vol	2168	2136	49	3272	1908	332	54			565		
tC, single (s)	7.1	6.5	6.2	7.1	6.5	6.2	4.1			4.1		
tC, 2 stage (s)												
tF (s)	3.5	4.0	3.3	3.5	4.0	3.3	2.2			2.2		
p0 queue free %	0	0	22	0	0	94	52			99		
cM capacity (veh/h)	0	25	1025	0	35	715	1551			1007		

Direction, Lane #	EB 1	WB 1	NB 1	SB 1
Volume Total	1967	685	1315	65
Volume Left	33	196	750	11
Volume Right	804	43	467	11
cSH	0	0	1551	1007
Volume to Capacity	Err	Err	0.48	0.01
Queue Length 95th (ft)	Err	Err	68	1
Control Delay (s)	Err	Err	8.4	1.5
Lane LOS	F	F	A	A
Approach Delay (s)	Err	Err	8.4	1.5
Approach LOS	F	F		

Intersection Summary			
Average Delay	Err		
Intersection Capacity Utilization	221.4%	ICU Level of Service	H
Analysis Period (min)	15		

Movement	EBL	EBR	NBL	NBT	SBT	SBR
Lane Configurations						
Volume (vph)	240	340	280	1070	1210	90
Ideal Flow (vphpl)	1900	1900	1900	1900	1900	1900
Total Lost time (s)	4.0	4.0	4.0	4.0	4.0	
Lane Util. Factor	1.00	1.00	1.00	0.95	0.95	
Frt	1.00	0.85	1.00	1.00	0.99	
Flt Protected	0.95	1.00	0.95	1.00	1.00	
Satd. Flow (prot)	1787	1599	1805	3610	3537	
Flt Permitted	0.95	1.00	0.95	1.00	1.00	
Satd. Flow (perm)	1787	1599	1805	3610	3537	
Peak-hour factor, PHF	0.96	0.96	0.96	0.96	0.96	0.96
Adj. Flow (vph)	250	354	292	1115	1260	94
RTOR Reduction (vph)	0	290	0	0	8	0
Lane Group Flow (vph)	250	64	292	1115	1346	0
Heavy Vehicles (%)	1%	1%	0%	0%	1%	1%
Turn Type		Perm	Prot			
Protected Phases	2		3	8	4	
Permitted Phases		2				
Actuated Green, G (s)	11.8	11.8	13.5	45.0	27.0	
Effective Green, g (s)	11.8	11.8	14.0	45.5	27.5	
Actuated g/C Ratio	0.18	0.18	0.21	0.70	0.42	
Clearance Time (s)	4.0	4.0	4.5	4.5	4.5	
Vehicle Extension (s)	2.0	2.0	2.0	2.5	2.5	
Lane Grp Cap (vph)	323	289	387	2515	1490	
v/s Ratio Prot	c0.14		c0.16	0.31	c0.38	
v/s Ratio Perm		0.04				
v/c Ratio	0.77	0.22	0.75	0.44	0.90	
Uniform Delay, d1	25.5	22.8	24.0	4.3	17.7	
Progression Factor	1.00	1.00	1.00	1.00	1.00	
Incremental Delay, d2	10.1	0.1	7.2	0.1	8.0	
Delay (s)	35.6	23.0	31.3	4.4	25.7	
Level of Service	D	C	C	A	C	
Approach Delay (s)	28.2			10.0	25.7	
Approach LOS	C			B	C	

Intersection Summary			
HCM Average Control Delay	19.6	HCM Level of Service	B
HCM Volume to Capacity ratio	0.84		
Actuated Cycle Length (s)	65.3	Sum of lost time (s)	12.0
Intersection Capacity Utilization	75.1%	ICU Level of Service	D
Analysis Period (min)	15		

c Critical Lane Group

Movement	EBL	EBT	EBR	WBL	WBT	WBR	NBL	NBT	NBR	SBL	SBT	SBR
Lane Configurations												
Volume (vph)	120	1020	1100	240	650	120	490	840	360	250	850	110
Ideal Flow (vphpl)	1900	1900	1900	1900	1900	1900	1900	1900	1900	1900	1900	1900
Total Lost time (s)	4.0	4.0	4.0	4.0	4.0	4.0	4.0	4.0	4.0	4.0	4.0	4.0
Lane Util. Factor	0.97	0.91	1.00	0.97	0.91	1.00	0.97	0.91	1.00	0.97	0.91	1.00
Frt	1.00	1.00	0.85	1.00	1.00	0.85	1.00	1.00	0.85	1.00	1.00	0.85
Flt Protected	0.95	1.00	1.00	0.95	1.00	1.00	0.95	1.00	1.00	0.95	1.00	1.00
Satd. Flow (prot)	3502	5187	1615	3502	5187	1615	3502	5187	1615	3467	5136	1599
Flt Permitted	0.95	1.00	1.00	0.95	1.00	1.00	0.95	1.00	1.00	0.95	1.00	1.00
Satd. Flow (perm)	3502	5187	1615	3502	5187	1615	3502	5187	1615	3467	5136	1599
Peak-hour factor, PHF	0.96	0.96	0.96	0.96	0.96	0.96	0.96	0.96	0.96	0.96	0.96	0.96
Adj. Flow (vph)	125	1062	1146	250	677	125	510	875	375	260	885	115
RTOR Reduction (vph)	0	0	0	0	0	90	0	0	93	0	0	79
Lane Group Flow (vph)	125	1062	1146	250	677	35	510	875	282	260	885	36
Heavy Vehicles (%)	0%	0%	0%	0%	0%	0%	0%	0%	0%	1%	1%	1%
Turn Type	Prot		Free	Prot		Perm	Prot		Perm	Prot		Perm
Protected Phases	7	4		3	8		5	2		1	6	
Permitted Phases			Free			8			2			6
Actuated Green, G (s)	6.4	30.0	110.0	6.0	29.6	29.6	19.0	42.6	42.6	9.4	33.0	33.0
Effective Green, g (s)	7.9	31.5	110.0	7.5	31.1	31.1	20.5	44.1	44.1	10.9	34.5	34.5
Actuated g/C Ratio	0.07	0.29	1.00	0.07	0.28	0.28	0.19	0.40	0.40	0.10	0.31	0.31
Clearance Time (s)	5.5	5.5		5.5	5.5	5.5	5.5	5.5	5.5	5.5	5.5	5.5
Vehicle Extension (s)	2.0	3.0		2.0	3.0	3.0	2.0	3.0	3.0	2.0	3.0	3.0
Lane Grp Cap (vph)	252	1485	1615	239	1467	457	653	2080	647	344	1611	502
v/s Ratio Prot	0.04	0.20		0.07	0.13		0.15	0.17		0.07	0.17	
v/s Ratio Perm			c0.71			0.02			0.17			0.02
v/c Ratio	0.50	0.72	0.71	1.05	0.46	0.08	0.78	0.42	0.44	0.76	0.55	0.07
Uniform Delay, d1	49.1	35.2	0.0	51.2	32.5	28.9	42.6	23.7	23.9	48.3	31.3	26.5
Progression Factor	1.00	1.00	1.00	1.00	1.00	1.00	1.00	1.00	1.00	1.00	1.00	1.00
Incremental Delay, d2	0.6	1.7	2.7	70.8	0.2	0.1	9.0	0.6	2.1	8.1	0.4	0.1
Delay (s)	49.7	36.9	2.7	122.0	32.8	29.0	51.6	24.4	26.1	56.4	31.7	26.6
Level of Service	D	D	A	F	C	C	D	C	C	E	C	C
Approach Delay (s)		20.8			53.5			32.6			36.3	
Approach LOS		C			D			C			D	

Intersection Summary			
HCM Average Control Delay	32.5	HCM Level of Service	C
HCM Volume to Capacity ratio	0.71		
Actuated Cycle Length (s)	110.0	Sum of lost time (s)	0.0
Intersection Capacity Utilization	70.3%	ICU Level of Service	C
Analysis Period (min)	15		

c Critical Lane Group

Level Of Service Computation Report
2000 HCM 4-Way Stop Method (Future Volume Alternative)

****

Intersection #4 Larch Rd/Tracy Blvd

****

Cycle (sec): 100 Critical Vol./Cap.(X): 3.364
Loss Time (sec): 0 (Y+R=4.0 sec) Average Delay (sec/veh): 613.1
Optimal Cycle: 0 Level Of Service: F

****

Street Name:	Tracy Blvd						Larch Rd					
Approach:	North Bound			South Bound			East Bound			West Bound		
Movement:	L - T - R			L - T - R			L - T - R			L - T - R		
Control:	Stop Sign			Stop Sign			Stop Sign			Stop Sign		
Rights:	Include			Include			Include			Include		
Min. Green:	0	0	0	0	0	0	0	0	0	0	0	0
Lanes:	1 0 1	0 1		1 0	0 1	0	0 0	1! 0	0	0 1	0 0	1
Volume Module:												
Base Vol:	480	190	140	10	100	10	10	630	840	220	140	20
Growth Adj:	1.00	1.00	1.00	1.00	1.00	1.00	1.00	1.00	1.00	1.00	1.00	1.00
Initial Bse:	480	190	140	10	100	10	10	630	840	220	140	20
Added Vol:	0	0	0	0	0	0	0	0	0	0	0	0
PasserByVol:	0	0	0	0	0	0	0	0	0	0	0	0
Initial Fut:	480	190	140	10	100	10	10	630	840	220	140	20
User Adj:	1.00	1.00	1.00	1.00	1.00	1.00	1.00	1.00	1.00	1.00	1.00	1.00
PHF Adj:	0.95	0.95	0.95	0.95	0.95	0.95	0.95	0.95	0.95	0.95	0.95	0.95
PHF Volume:	505	200	147	11	105	11	11	663	884	232	147	21
Reduct Vol:	0	0	0	0	0	0	0	0	0	0	0	0
Reduced Vol:	505	200	147	11	105	11	11	663	884	232	147	21
PCE Adj:	1.00	1.00	1.00	1.00	1.00	1.00	1.00	1.00	1.00	1.00	1.00	1.00
MLF Adj:	1.00	1.00	1.00	1.00	1.00	1.00	1.00	1.00	1.00	1.00	1.00	1.00
FinalVolume:	505	200	147	11	105	11	11	663	884	232	147	21
Saturation Flow Module:												
Adjustment:	1.00	1.00	1.00	1.00	1.00	1.00	1.00	1.00	1.00	1.00	1.00	1.00
Lanes:	1.00	1.00	1.00	1.00	0.91	0.09	0.01	0.42	0.57	0.61	0.39	1.00
Final Sat.:	399	421	457	356	343	34	3	197	263	254	162	467
Capacity Analysis Module:												
Vol/Sat:	1.27	0.48	0.32	0.03	0.31	0.31	3.36	3.36	3.36	0.91	0.91	0.05
Crit Moves:	****				****		****				****	
Delay/Veh:	165.1	18.7	14.2	12.9	16.1	16.1	1084	1084	1084	54.1	54.1	10.7
Delay Adj:	1.00	1.00	1.00	1.00	1.00	1.00	1.00	1.00	1.00	1.00	1.00	1.00
AdjDel/Veh:	165.1	18.7	14.2	12.9	16.1	16.1	1084	1084	1084	54.1	54.1	10.7
LOS by Move:	F	C	B	B	C	C	F	F	F	F	F	B
ApproachDel:	104.7			15.8			1084.0			51.8		
Delay Adj:	1.00			1.00			1.00			1.00		
ApprAdjDel:	104.7			15.8			1084.0			51.8		
LOS by Appr:	F			C			F			F		
AllWayAvgQ:	17.0	0.9	0.5	0.0	0.4	0.4	138	138	138.1	4.9	4.9	0.0

****

Note: Queue reported is the number of cars per lane.

****

Movement	EBL	EBT	EBR	WBL	WBT	WBR	NBL	NBT	NBR	SBL	SBT	SBR
Lane Configurations												
Volume (vph)	0	0	0	470	0	450	360	460	0	0	1090	160
Ideal Flow (vphpl)	1900	1900	1900	1900	1900	1900	1900	1900	1900	1900	1900	1900
Total Lost time (s)					4.0	4.0	4.0	4.0			4.0	
Lane Util. Factor					1.00	1.00	1.00	0.95			0.95	
Frt					1.00	0.85	1.00	1.00			0.98	
Flt Protected					0.95	1.00	0.95	1.00			1.00	
Satd. Flow (prot)					1752	1568	1752	3505			3471	
Flt Permitted					0.95	1.00	0.95	1.00			1.00	
Satd. Flow (perm)					1752	1568	1752	3505			3471	
Peak-hour factor, PHF	0.94	0.94	0.94	0.94	0.94	0.94	0.94	0.94	0.94	0.94	0.94	0.94
Adj. Flow (vph)	0	0	0	500	0	479	383	489	0	0	1160	170
RTOR Reduction (vph)	0	0	0	0	0	160	0	0	0	0	11	0
Lane Group Flow (vph)	0	0	0	0	500	319	383	489	0	0	1319	0
Heavy Vehicles (%)	0%	0%	0%	3%	3%	3%	3%	3%	3%	2%	2%	2%
Turn Type				Perm		Perm	Prot					
Protected Phases					8		5	2			6	
Permitted Phases				8		8						
Actuated Green, G (s)					33.9	33.9	21.0	65.2			40.2	
Effective Green, g (s)					33.9	33.9	21.0	66.1			41.1	
Actuated g/C Ratio					0.31	0.31	0.19	0.61			0.38	
Clearance Time (s)					4.0	4.0	4.0	4.9			4.9	
Vehicle Extension (s)					3.0	3.0	3.0	3.0			3.0	
Lane Grp Cap (vph)					550	492	341	2145			1321	
v/s Ratio Prot							c0.22	0.14			c0.38	
v/s Ratio Perm					0.29	0.20						
v/c Ratio					0.91	0.65	1.12	0.23			1.00	
Uniform Delay, d1					35.6	31.9	43.5	9.4			33.4	
Progression Factor					1.00	1.00	1.00	1.00			1.00	
Incremental Delay, d2					18.8	2.9	86.3	0.1			24.3	
Delay (s)					54.4	34.9	129.8	9.5			57.7	
Level of Service					D	C	F	A			E	
Approach Delay (s)		0.0			44.8			62.4			57.7	
Approach LOS		A			D			E			E	

Intersection Summary			
HCM Average Control Delay	55.0	HCM Level of Service	E
HCM Volume to Capacity ratio	0.99		
Actuated Cycle Length (s)	108.0	Sum of lost time (s)	12.0
Intersection Capacity Utilization	92.5%	ICU Level of Service	F
Analysis Period (min)	15		

c Critical Lane Group

Movement	EBL	EBT	EBR	WBL	WBT	WBR	NBL	NBT	NBR	SBL	SBT	SBR
Lane Configurations												
Volume (vph)	120	0	520	0	0	0	0	700	450	760	800	0
Ideal Flow (vphpl)	1900	1900	1900	1900	1900	1900	1900	1900	1900	1900	1900	1900
Total Lost time (s)		4.0	4.0					4.0		4.0	4.0	
Lane Util. Factor		1.00	1.00					0.95		1.00	0.95	
Frt		1.00	0.85					0.94		1.00	1.00	
Flt Protected		0.95	1.00					1.00		0.95	1.00	
Satd. Flow (prot)		1752	1568					3331		1787	3574	
Flt Permitted		0.95	1.00					1.00		0.95	1.00	
Satd. Flow (perm)		1752	1568					3331		1787	3574	
Peak-hour factor, PHF	0.95	0.95	0.95	0.95	0.95	0.95	0.95	0.95	0.95	0.95	0.95	0.95
Adj. Flow (vph)	126	0	547	0	0	0	0	737	474	800	842	0
RTOR Reduction (vph)	0	0	135	0	0	0	0	102	0	0	0	0
Lane Group Flow (vph)	0	126	412	0	0	0	0	1109	0	800	842	0
Heavy Vehicles (%)	3%	3%	3%	0%	0%	0%	2%	2%	2%	1%	1%	1%
Turn Type	Perm		Perm							Prot		
Protected Phases		4						2		1	6	
Permitted Phases	4		4									
Actuated Green, G (s)		27.9	27.9					37.0		21.2	62.2	
Effective Green, g (s)		28.8	28.8					37.9		21.2	63.1	
Actuated g/C Ratio		0.29	0.29					0.38		0.21	0.63	
Clearance Time (s)		4.9	4.9					4.9		4.0	4.9	
Vehicle Extension (s)		3.0	3.0					3.0		3.0	3.0	
Lane Grp Cap (vph)		505	452					1264		379	2257	
v/s Ratio Prot								c0.33		c0.45	0.24	
v/s Ratio Perm		0.07	c0.26									
v/c Ratio		0.25	0.91					0.88		2.11	0.37	
Uniform Delay, d1		27.3	34.3					28.8		39.4	8.9	
Progression Factor		1.00	1.00					1.00		1.00	1.00	
Incremental Delay, d2		0.3	22.6					7.2		508.7	0.1	
Delay (s)		27.5	56.9					36.0		548.1	9.0	
Level of Service		C	E					D		F	A	
Approach Delay (s)		51.4			0.0			36.0			271.6	
Approach LOS		D			A			D			F	

Intersection Summary			
HCM Average Control Delay	148.7	HCM Level of Service	F
HCM Volume to Capacity ratio	1.19		
Actuated Cycle Length (s)	99.9	Sum of lost time (s)	12.0
Intersection Capacity Utilization	92.5%	ICU Level of Service	F
Analysis Period (min)	15		

c Critical Lane Group

Movement	EBL	EBT	EBR	WBL	WBT	WBR	NBL	NBT	NBR	SBL	SBT	SBR
Lane Configurations												
Volume (vph)	220	430	410	90	260	170	370	640	120	260	730	110
Ideal Flow (vphpl)	1900	1900	1900	1900	1900	1900	1900	1900	1900	1900	1900	1900
Total Lost time (s)	4.0	4.0		4.0	4.0		4.0	4.0		4.0	4.0	
Lane Util. Factor	1.00	0.95		1.00	0.95		1.00	0.95		1.00	0.95	
Frt	1.00	0.93		1.00	0.94		1.00	0.98		1.00	0.98	
Flt Protected	0.95	1.00		0.95	1.00		0.95	1.00		0.95	1.00	
Satd. Flow (prot)	1805	3346		1787	3362		1787	3490		1787	3504	
Flt Permitted	0.95	1.00		0.95	1.00		0.95	1.00		0.95	1.00	
Satd. Flow (perm)	1805	3346		1787	3362		1787	3490		1787	3504	
Peak-hour factor, PHF	0.95	0.95	0.95	0.95	0.95	0.95	0.95	0.95	0.95	0.95	0.95	0.95
Adj. Flow (vph)	232	453	432	95	274	179	389	674	126	274	768	116
RTOR Reduction (vph)	0	174	0	0	121	0	0	14	0	0	11	0
Lane Group Flow (vph)	232	711	0	95	332	0	389	786	0	274	873	0
Heavy Vehicles (%)	0%	0%	0%	1%	1%	1%	1%	1%	1%	1%	1%	1%
Turn Type	Prot			Prot			Prot			Prot		
Protected Phases	5	2		1	6		3	8		7	4	
Permitted Phases												
Actuated Green, G (s)	15.0	23.0		7.7	15.7		19.0	30.0		16.8	27.8	
Effective Green, g (s)	15.5	24.0		8.2	16.7		19.5	30.5		17.3	28.3	
Actuated g/C Ratio	0.16	0.25		0.09	0.17		0.20	0.32		0.18	0.29	
Clearance Time (s)	4.5	5.0		4.5	5.0		4.5	4.5		4.5	4.5	
Vehicle Extension (s)	1.0	3.0		1.0	3.0		1.0	3.0		1.0	3.0	
Lane Grp Cap (vph)	291	837		153	585		363	1109		322	1033	
v/s Ratio Prot	c0.13	c0.21		0.05	0.10		c0.22	0.23		0.15	c0.25	
v/s Ratio Perm												
v/c Ratio	0.80	0.85		0.62	0.57		1.07	0.71		0.85	0.84	
Uniform Delay, d1	38.7	34.3		42.4	36.3		38.2	28.8		38.1	31.8	
Progression Factor	1.00	1.00		1.00	1.00		1.00	1.00		1.00	1.00	
Incremental Delay, d2	13.2	8.1		5.5	1.3		67.6	3.8		18.3	8.5	
Delay (s)	51.9	42.3		47.9	37.6		105.9	32.7		56.4	40.3	
Level of Service	D	D		D	D		F	C		E	D	
Approach Delay (s)		44.3			39.4			56.6			44.1	
Approach LOS		D			D			E			D	

Intersection Summary			
HCM Average Control Delay	47.2	HCM Level of Service	D
HCM Volume to Capacity ratio	0.87		
Actuated Cycle Length (s)	96.0	Sum of lost time (s)	12.0
Intersection Capacity Utilization	87.6%	ICU Level of Service	E
Analysis Period (min)	15		

c Critical Lane Group

Movement	EBL	EBT	EBR	WBL	WBT	WBR	NBL	NBT	NBR	SBL	SBT	SBR
Lane Configurations												
Volume (veh/h)	410	10	350	10	10	10	110	40	10	10	40	50
Sign Control		Stop			Stop			Free			Free	
Grade		0%			0%			0%			0%	
Peak Hour Factor	0.92	0.92	0.92	0.92	0.92	0.92	0.92	0.92	0.92	0.92	0.92	0.92
Hourly flow rate (vph)	446	11	380	11	11	11	120	43	11	11	43	54
Pedestrians												
Lane Width (ft)												
Walking Speed (ft/s)												
Percent Blockage												
Right turn flare (veh)												
Median type								None			None	
Median storage veh)												
Upstream signal (ft)												
pX, platoon unblocked												
vC, conflicting volume	397	386	71	766	408	49	98			54		
vC1, stage 1 conf vol												
vC2, stage 2 conf vol												
vCu, unblocked vol	397	386	71	766	408	49	98			54		
tC, single (s)	7.1	6.5	6.2	7.1	6.5	6.2	4.1			4.1		
tC, 2 stage (s)												
tF (s)	3.5	4.0	3.3	3.5	4.0	3.3	2.2			2.2		
p0 queue free %	13	98	62	94	98	99	92			99		
cM capacity (veh/h)	513	502	995	183	490	1025	1489			1557		

Direction, Lane #	EB 1	EB 2	WB 1	NB 1	SB 1
Volume Total	446	391	33	174	109
Volume Left	446	0	11	120	11
Volume Right	0	380	11	11	54
cSH	513	968	353	1489	1557
Volume to Capacity	0.87	0.40	0.09	0.08	0.01
Queue Length 95th (ft)	234	50	8	7	1
Control Delay (s)	42.5	11.2	16.2	5.4	0.8
Lane LOS	E	B	C	A	A
Approach Delay (s)	27.9		16.2	5.4	0.8
Approach LOS	D		C		

Intersection Summary			
Average Delay	21.6		
Intersection Capacity Utilization	51.5%	ICU Level of Service	A
Analysis Period (min)	15		

Movement	EBL	EBT	EBR	WBL	WBT	WBR	NBL	NBT	NBR	SBL	SBT	SBR
Lane Configurations												
Volume (vph)	100	550	50	50	140	60	100	260	50	270	300	80
Ideal Flow (vphpl)	1900	1900	1900	1900	1900	1900	1900	1900	1900	1900	1900	1900
Total Lost time (s)	4.0	4.0		4.0	4.0		4.0	4.0	4.0	4.0	4.0	4.0
Lane Util. Factor	1.00	0.95		1.00	0.95		1.00	1.00	1.00	1.00	1.00	1.00
Frt	1.00	0.99		1.00	0.96		1.00	1.00	0.85	1.00	1.00	0.85
Flt Protected	0.95	1.00		0.95	1.00		0.95	1.00	1.00	0.95	1.00	1.00
Satd. Flow (prot)	1805	3565		1805	3448		1805	1900	1615	1805	1900	1615
Flt Permitted	0.95	1.00		0.95	1.00		0.95	1.00	1.00	0.95	1.00	1.00
Satd. Flow (perm)	1805	3565		1805	3448		1805	1900	1615	1805	1900	1615
Peak-hour factor, PHF	0.92	0.92	0.92	0.92	0.92	0.92	0.92	0.92	0.92	0.92	0.92	0.92
Adj. Flow (vph)	109	598	54	54	152	65	109	283	54	293	326	87
RTOR Reduction (vph)	0	7	0	0	50	0	0	0	29	0	0	27
Lane Group Flow (vph)	109	645	0	54	167	0	109	283	25	293	326	60
Heavy Vehicles (%)	0%	0%	0%	0%	0%	0%	0%	0%	0%	0%	0%	0%
Turn Type	Prot			Prot			Prot		Perm	Prot		Perm
Protected Phases	1	6		5	2		3	8		7	4	
Permitted Phases									8			4
Actuated Green, G (s)	6.7	19.3		3.7	16.3		6.7	15.9	15.9	15.3	24.5	24.5
Effective Green, g (s)	7.2	19.8		4.2	16.8		7.2	16.4	16.4	15.8	25.0	25.0
Actuated g/C Ratio	0.10	0.27		0.06	0.23		0.10	0.23	0.23	0.22	0.35	0.35
Clearance Time (s)	4.5	4.5		4.5	4.5		4.5	4.5	4.5	4.5	4.5	4.5
Vehicle Extension (s)	1.0	3.0		1.0	3.0		1.0	2.0	2.0	1.0	2.0	2.0
Lane Grp Cap (vph)	180	978		105	802		180	432	367	395	658	559
v/s Ratio Prot	c0.06	c0.18		0.03	0.05		0.06	c0.15		c0.16	0.17	
v/s Ratio Perm									0.02			0.04
v/c Ratio	0.61	0.66		0.51	0.21		0.61	0.66	0.07	0.74	0.50	0.11
Uniform Delay, d1	31.1	23.2		33.0	22.3		31.1	25.3	21.9	26.3	18.6	16.0
Progression Factor	1.00	1.00		1.00	1.00		1.00	1.00	1.00	1.00	1.00	1.00
Incremental Delay, d2	3.9	1.6		1.8	0.1		3.9	2.7	0.0	6.4	0.2	0.0
Delay (s)	35.0	24.8		34.8	22.5		35.0	28.1	21.9	32.7	18.8	16.0
Level of Service	D	C		C	C		D	C	C	C	B	B
Approach Delay (s)		26.3			24.9			29.0			24.3	
Approach LOS		C			C			C			C	

Intersection Summary			
HCM Average Control Delay	26.0	HCM Level of Service	C
HCM Volume to Capacity ratio	0.69		
Actuated Cycle Length (s)	72.2	Sum of lost time (s)	16.0
Intersection Capacity Utilization	63.8%	ICU Level of Service	B
Analysis Period (min)	15		

c Critical Lane Group

Movement	EBL	EBT	EBR	WBL	WBT	WBR	NBL	NBT	NBR	SBL	SBT	SBR
Lane Configurations												
Volume (vph)	600	1200	220	480	740	360	130	1610	310	460	1540	90
Ideal Flow (vphpl)	1900	1900	1900	1900	1900	1900	1900	1900	1900	1900	1900	1900
Total Lost time (s)	4.0	4.0	4.0	4.0	4.0	4.0	4.0	4.0	4.0	4.0	4.0	4.0
Lane Util. Factor	0.97	0.91	1.00	0.97	0.91	1.00	0.97	0.91	1.00	0.97	0.91	1.00
Frt	1.00	1.00	0.85	1.00	1.00	0.85	1.00	1.00	0.85	1.00	1.00	0.85
Flt Protected	0.95	1.00	1.00	0.95	1.00	1.00	0.95	1.00	1.00	0.95	1.00	1.00
Satd. Flow (prot)	3502	5187	1615	3502	5187	1615	3502	5187	1615	3502	5187	1615
Flt Permitted	0.95	1.00	1.00	0.95	1.00	1.00	0.95	1.00	1.00	0.95	1.00	1.00
Satd. Flow (perm)	3502	5187	1615	3502	5187	1615	3502	5187	1615	3502	5187	1615
Peak-hour factor, PHF	0.96	0.96	0.96	0.96	0.96	0.96	0.96	0.96	0.96	0.96	0.96	0.96
Adj. Flow (vph)	625	1250	229	500	771	375	135	1677	323	479	1604	94
RTOR Reduction (vph)	0	0	0	0	0	0	0	0	88	0	0	28
Lane Group Flow (vph)	625	1250	229	500	771	375	135	1677	235	479	1604	66
Heavy Vehicles (%)	0%	0%	0%	0%	0%	0%	0%	0%	0%	0%	0%	0%
Turn Type	Prot		Free	Prot		Free	Prot		Perm	Prot		Perm
Protected Phases	5	2		1	6		7	4		3	8	
Permitted Phases			Free			Free			4			8
Actuated Green, G (s)	25.0	39.5	150.0	21.0	35.5	150.0	8.8	48.5	48.5	19.0	58.7	58.7
Effective Green, g (s)	26.0	41.5	150.0	22.0	37.5	150.0	9.8	50.5	50.5	20.0	60.7	60.7
Actuated g/C Ratio	0.17	0.28	1.00	0.15	0.25	1.00	0.07	0.34	0.34	0.13	0.40	0.40
Clearance Time (s)	5.0	6.0		5.0	6.0		5.0	6.0	6.0	5.0	6.0	6.0
Vehicle Extension (s)	3.0	3.0		3.0	3.0		3.0	3.0	3.0	3.0	3.0	3.0
Lane Grp Cap (vph)	607	1435	1615	514	1297	1615	229	1746	544	467	2099	654
v/s Ratio Prot	c0.18	c0.24		0.14	0.15		0.04	c0.32		c0.14	0.31	
v/s Ratio Perm			0.14			0.23			0.15			0.04
v/c Ratio	1.03	0.87	0.14	0.97	0.59	0.23	0.59	0.96	0.43	1.03	0.76	0.10
Uniform Delay, d1	62.0	51.7	0.0	63.7	49.6	0.0	68.1	48.8	38.6	65.0	38.5	27.7
Progression Factor	1.00	1.00	1.00	1.00	1.00	1.00	1.00	1.00	1.00	1.00	1.00	1.00
Incremental Delay, d2	44.3	6.1	0.2	32.6	0.7	0.3	3.8	14.0	2.5	48.4	2.7	0.3
Delay (s)	106.3	57.8	0.2	96.3	50.3	0.3	72.0	62.8	41.1	113.4	41.2	28.0
Level of Service	F	E	A	F	D	A	E	E	D	F	D	C
Approach Delay (s)		65.9			52.9			60.1			56.5	
Approach LOS		E			D			E			E	

Intersection Summary			
HCM Average Control Delay	59.2	HCM Level of Service	E
HCM Volume to Capacity ratio	0.97		
Actuated Cycle Length (s)	150.0	Sum of lost time (s)	16.0
Intersection Capacity Utilization	94.4%	ICU Level of Service	F
Analysis Period (min)	15		

c Critical Lane Group

Movement	EBL	EBT	EBR	WBL	WBT	WBR	NBL	NBT	NBR	SBL	SBT	SBR
Lane Configurations												
Volume (vph)	360	620	610	190	370	160	590	590	100	200	740	500
Ideal Flow (vphpl)	1900	1900	1900	1900	1900	1900	1900	1900	1900	1900	1900	1900
Total Lost time (s)	4.0	4.0	4.0	4.0	4.0	4.0	4.0	4.0	4.0	4.0	4.0	4.0
Lane Util. Factor	0.97	0.95	1.00	0.97	0.95	1.00	0.97	0.95	1.00	0.97	0.95	1.00
Frt	1.00	1.00	0.85	1.00	1.00	0.85	1.00	1.00	0.85	1.00	1.00	0.85
Flt Protected	0.95	1.00	1.00	0.95	1.00	1.00	0.95	1.00	1.00	0.95	1.00	1.00
Satd. Flow (prot)	3502	3610	1615	3502	3610	1615	3502	3610	1615	3502	3610	1615
Flt Permitted	0.95	1.00	1.00	0.95	1.00	1.00	0.95	1.00	1.00	0.95	1.00	1.00
Satd. Flow (perm)	3502	3610	1615	3502	3610	1615	3502	3610	1615	3502	3610	1615
Peak-hour factor, PHF	0.96	0.96	0.96	0.96	0.96	0.96	0.96	0.96	0.96	0.96	0.96	0.96
Adj. Flow (vph)	375	646	635	198	385	167	615	615	104	208	771	521
RTOR Reduction (vph)	0	0	231	0	0	114	0	0	56	0	0	143
Lane Group Flow (vph)	375	646	404	198	385	53	615	615	48	208	771	378
Heavy Vehicles (%)	0%	0%	0%	0%	0%	0%	0%	0%	0%	0%	0%	0%
Turn Type	Prot		Perm	Prot		Perm	Prot		Perm	Prot		Perm
Protected Phases	5	2		1	6		3	8		7	4	
Permitted Phases			2			6			8			4
Actuated Green, G (s)	15.4	38.4	38.4	10.6	33.6	33.6	15.5	30.1	30.1	10.9	25.5	25.5
Effective Green, g (s)	15.9	39.9	39.9	11.1	35.1	35.1	16.0	31.6	31.6	11.4	27.0	27.0
Actuated g/C Ratio	0.14	0.36	0.36	0.10	0.32	0.32	0.15	0.29	0.29	0.10	0.25	0.25
Clearance Time (s)	4.5	5.5	5.5	4.5	5.5	5.5	4.5	5.5	5.5	4.5	5.5	5.5
Vehicle Extension (s)	2.0	2.5	2.5	2.0	2.5	2.5	2.0	2.0	2.0	2.0	2.0	2.0
Lane Grp Cap (vph)	506	1309	586	353	1152	515	509	1037	464	363	886	396
v/s Ratio Prot	c0.11	0.18		0.06	0.11		c0.18	0.17		0.06	0.21	
v/s Ratio Perm			c0.25			0.03			0.03			c0.23
v/c Ratio	0.74	0.49	0.69	0.56	0.33	0.10	1.21	0.59	0.10	0.57	0.87	0.96
Uniform Delay, d1	45.1	27.2	29.8	47.1	28.5	26.4	47.0	33.7	28.8	47.0	39.8	40.9
Progression Factor	1.00	1.00	1.00	1.00	1.00	1.00	1.00	1.00	1.00	1.00	1.00	1.00
Incremental Delay, d2	5.1	1.3	6.5	1.2	0.8	0.4	111.0	0.6	0.0	1.4	9.0	33.3
Delay (s)	50.2	28.5	36.3	48.3	29.3	26.8	158.0	34.3	28.8	48.3	48.9	74.2
Level of Service	D	C	D	D	C	C	F	C	C	D	D	E
Approach Delay (s)		36.4			33.8			90.9			57.6	
Approach LOS		D			C			F			E	

Intersection Summary			
HCM Average Control Delay	56.0	HCM Level of Service	E
HCM Volume to Capacity ratio	0.84		
Actuated Cycle Length (s)	110.0	Sum of lost time (s)	12.0
Intersection Capacity Utilization	73.6%	ICU Level of Service	D
Analysis Period (min)	15		

c Critical Lane Group

Movement	EBL	EBT	EBR	WBL	WBT	WBR	NBL	NBT	NBR	SBL	SBT	SBR
Lane Configurations												
Volume (vph)	80	590	110	120	350	40	130	140	120	80	130	100
Ideal Flow (vphpl)	1900	1900	1900	1900	1900	1900	1900	1900	1900	1900	1900	1900
Total Lost time (s)	4.0	4.0		4.0	4.0		4.0	4.0		4.0	4.0	4.0
Lane Util. Factor	1.00	0.95		1.00	0.95		1.00	1.00		1.00	1.00	1.00
Frt	1.00	0.98		1.00	0.98		1.00	0.93		1.00	1.00	0.85
Flt Protected	0.95	1.00		0.95	1.00		0.95	1.00		0.95	1.00	1.00
Satd. Flow (prot)	1787	3490		1805	3555		1787	1751		1770	1863	1583
Flt Permitted	0.95	1.00		0.95	1.00		0.95	1.00		0.95	1.00	1.00
Satd. Flow (perm)	1787	3490		1805	3555		1787	1751		1770	1863	1583
Peak-hour factor, PHF	0.92	0.92	0.92	0.92	0.92	0.92	0.92	0.92	0.92	0.92	0.92	0.92
Adj. Flow (vph)	87	641	120	130	380	43	141	152	130	87	141	109
RTOR Reduction (vph)	0	12	0	0	7	0	0	35	0	0	0	91
Lane Group Flow (vph)	87	749	0	130	416	0	141	247	0	87	141	18
Heavy Vehicles (%)	1%	1%	1%	0%	0%	0%	1%	1%	1%	2%	2%	2%
Turn Type	Prot			Prot			Prot			Prot		Perm
Protected Phases	1	6		5	2		3	8		7	4	
Permitted Phases												4
Actuated Green, G (s)	7.5	42.1		9.6	44.2		11.9	19.2		8.1	15.4	15.4
Effective Green, g (s)	7.5	42.6		9.6	44.7		11.9	19.7		8.1	15.9	15.9
Actuated g/C Ratio	0.08	0.44		0.10	0.47		0.12	0.21		0.08	0.17	0.17
Clearance Time (s)	4.0	4.5		4.0	4.5		4.0	4.5		4.0	4.5	4.5
Vehicle Extension (s)	2.0	5.0		2.0	3.0		2.0	2.0		2.0	2.0	2.0
Lane Grp Cap (vph)	140	1549		181	1655		222	359		149	309	262
v/s Ratio Prot	0.05	c0.21		c0.07	0.12		c0.08	c0.14		0.05	0.08	
v/s Ratio Perm												0.01
v/c Ratio	0.62	0.48		0.72	0.25		0.64	0.69		0.58	0.46	0.07
Uniform Delay, d1	42.9	18.9		41.9	15.5		40.0	35.3		42.3	36.1	33.8
Progression Factor	1.00	1.00		1.00	1.00		1.00	1.00		1.00	1.00	1.00
Incremental Delay, d2	6.0	1.1		10.7	0.4		4.3	4.3		3.7	0.4	0.0
Delay (s)	48.9	20.0		52.6	15.9		44.3	39.6		46.1	36.5	33.8
Level of Service	D	B		D	B		D	D		D	D	C
Approach Delay (s)		23.0			24.5			41.2			38.1	
Approach LOS		C			C			D			D	

Intersection Summary			
HCM Average Control Delay	29.3	HCM Level of Service	C
HCM Volume to Capacity ratio	0.58		
Actuated Cycle Length (s)	96.0	Sum of lost time (s)	16.0
Intersection Capacity Utilization	58.9%	ICU Level of Service	B
Analysis Period (min)	15		

c Critical Lane Group

Movement	EBL	EBT	EBR	WBL	WBT	WBR	NBL	NBT	NBR	SBL	SBT	SBR
Lane Configurations												
Volume (veh/h)	30	1020	700	210	390	160	660	80	410	20	50	10
Sign Control		Stop			Stop			Free			Free	
Grade		0%			0%			0%			0%	
Peak Hour Factor	0.92	0.92	0.92	0.92	0.92	0.92	0.92	0.92	0.92	0.92	0.92	0.92
Hourly flow rate (vph)	33	1109	761	228	424	174	717	87	446	22	54	11
Pedestrians												
Lane Width (ft)												
Walking Speed (ft/s)												
Percent Blockage												
Right turn flare (veh)												
Median type								None			None	
Median storage veh)												
Upstream signal (ft)												
pX, platoon unblocked												
vC, conflicting volume	2234	2071	60	3163	1853	310	65			533		
vC1, stage 1 conf vol												
vC2, stage 2 conf vol												
vCu, unblocked vol	2234	2071	60	3163	1853	310	65			533		
tC, single (s)	7.1	6.5	6.2	7.1	6.5	6.2	4.1			4.1		
tC, 2 stage (s)												
tF (s)	3.5	4.0	3.3	3.5	4.0	3.3	2.2			2.2		
p0 queue free %	0	0	25	0	0	76	53			98		
cM capacity (veh/h)	0	29	1011	0	39	735	1537			1035		

Direction, Lane #	EB 1	WB 1	NB 1	SB 1
Volume Total	1902	826	1250	87
Volume Left	33	228	717	22
Volume Right	761	174	446	11
cSH	0	0	1537	1035
Volume to Capacity	Err	Err	0.47	0.02
Queue Length 95th (ft)	Err	Err	64	2
Control Delay (s)	Err	Err	8.1	2.3
Lane LOS	F	F	A	A
Approach Delay (s)	Err	Err	8.1	2.3
Approach LOS	F	F		

Intersection Summary			
Average Delay	Err		
Intersection Capacity Utilization	222.5%	ICU Level of Service	H
Analysis Period (min)	15		

Movement	EBL	EBR	NBL	NBT	SBT	SBR
Lane Configurations						
Volume (vph)	250	560	440	1010	1190	110
Ideal Flow (vphpl)	1900	1900	1900	1900	1900	1900
Total Lost time (s)	4.0	4.0	4.0	4.0	4.0	
Lane Util. Factor	1.00	1.00	1.00	0.95	0.95	
Frt	1.00	0.85	1.00	1.00	0.99	
Flt Protected	0.95	1.00	0.95	1.00	1.00	
Satd. Flow (prot)	1787	1599	1805	3610	3529	
Flt Permitted	0.95	1.00	0.95	1.00	1.00	
Satd. Flow (perm)	1787	1599	1805	3610	3529	
Peak-hour factor, PHF	0.98	0.98	0.98	0.98	0.98	0.98
Adj. Flow (vph)	255	571	449	1031	1214	112
RTOR Reduction (vph)	0	367	0	0	8	0
Lane Group Flow (vph)	255	204	449	1031	1318	0
Heavy Vehicles (%)	1%	1%	0%	0%	1%	1%
Turn Type		Perm	Prot			
Protected Phases	2		3	8	4	
Permitted Phases		2				
Actuated Green, G (s)	14.0	14.0	20.2	54.6	29.9	
Effective Green, g (s)	14.0	14.0	20.7	55.1	30.4	
Actuated g/C Ratio	0.18	0.18	0.27	0.71	0.39	
Clearance Time (s)	4.0	4.0	4.5	4.5	4.5	
Vehicle Extension (s)	2.0	2.0	2.0	2.5	2.5	
Lane Grp Cap (vph)	324	290	485	2580	1391	
v/s Ratio Prot	c0.14		c0.25	0.29	c0.37	
v/s Ratio Perm		0.13				
v/c Ratio	0.79	0.70	0.93	0.40	0.95	
Uniform Delay, d1	30.1	29.6	27.5	4.4	22.6	
Progression Factor	1.00	1.00	1.00	1.00	1.00	
Incremental Delay, d2	11.0	6.2	23.3	0.1	13.4	
Delay (s)	41.2	35.8	50.8	4.5	36.0	
Level of Service	D	D	D	A	D	
Approach Delay (s)	37.5			18.5	36.0	
Approach LOS	D			B	D	

Intersection Summary			
HCM Average Control Delay	29.2	HCM Level of Service	C
HCM Volume to Capacity ratio	0.91		
Actuated Cycle Length (s)	77.1	Sum of lost time (s)	12.0
Intersection Capacity Utilization	84.6%	ICU Level of Service	E
Analysis Period (min)	15		

c Critical Lane Group

Movement	EBL	EBT	EBR	WBL	WBT	WBR	NBL	NBT	NBR	SBL	SBT	SBR
Lane Configurations												
Volume (vph)	100	830	1000	180	630	140	520	910	240	310	970	140
Ideal Flow (vphpl)	1900	1900	1900	1900	1900	1900	1900	1900	1900	1900	1900	1900
Total Lost time (s)	4.0	4.0	4.0	4.0	4.0	4.0	4.0	4.0	4.0	4.0	4.0	4.0
Lane Util. Factor	0.97	0.91	1.00	0.97	0.91	1.00	0.97	0.91	1.00	0.97	0.91	1.00
Frt	1.00	1.00	0.85	1.00	1.00	0.85	1.00	1.00	0.85	1.00	1.00	0.85
Flt Protected	0.95	1.00	1.00	0.95	1.00	1.00	0.95	1.00	1.00	0.95	1.00	1.00
Satd. Flow (prot)	3502	5187	1615	3502	5187	1615	3502	5187	1615	3467	5136	1599
Flt Permitted	0.95	1.00	1.00	0.95	1.00	1.00	0.95	1.00	1.00	0.95	1.00	1.00
Satd. Flow (perm)	3502	5187	1615	3502	5187	1615	3502	5187	1615	3467	5136	1599
Peak-hour factor, PHF	0.97	0.97	0.97	0.97	0.97	0.97	0.97	0.97	0.97	0.97	0.97	0.97
Adj. Flow (vph)	103	856	1031	186	649	144	536	938	247	320	1000	144
RTOR Reduction (vph)	0	0	0	0	0	101	0	0	112	0	0	99
Lane Group Flow (vph)	103	856	1031	186	649	43	536	938	135	320	1000	45
Heavy Vehicles (%)	0%	0%	0%	0%	0%	0%	0%	0%	0%	1%	1%	1%
Turn Type	Prot		Free	Prot		Perm	Prot		Perm	Prot		Perm
Protected Phases	7	4		3	8		5	2		1	6	
Permitted Phases			Free			8			2			6
Actuated Green, G (s)	4.6	22.2	84.8	6.1	23.7	23.7	9.6	23.6	23.6	10.9	24.9	24.9
Effective Green, g (s)	6.1	23.7	84.8	7.6	25.2	25.2	11.1	25.1	25.1	12.4	26.4	26.4
Actuated g/C Ratio	0.07	0.28	1.00	0.09	0.30	0.30	0.13	0.30	0.30	0.15	0.31	0.31
Clearance Time (s)	5.5	5.5		5.5	5.5	5.5	5.5	5.5	5.5	5.5	5.5	5.5
Vehicle Extension (s)	2.0	3.0		2.0	3.0	3.0	2.0	3.0	3.0	2.0	3.0	3.0
Lane Grp Cap (vph)	252	1450	1615	314	1541	480	458	1535	478	507	1599	498
v/s Ratio Prot	0.03	0.17		0.05	0.13		c0.15	0.18		0.09	0.19	
v/s Ratio Perm			c0.64			0.03			0.08			0.03
v/c Ratio	0.41	0.59	0.64	0.59	0.42	0.09	1.17	0.61	0.28	0.63	0.63	0.09
Uniform Delay, d1	37.6	26.4	0.0	37.1	23.9	21.5	36.9	25.7	22.9	34.0	25.0	20.7
Progression Factor	1.00	1.00	1.00	1.00	1.00	1.00	1.00	1.00	1.00	1.00	1.00	1.00
Incremental Delay, d2	0.4	0.6	1.9	2.0	0.2	0.1	97.8	0.7	0.3	1.9	0.8	0.1
Delay (s)	38.0	27.0	1.9	39.1	24.1	21.6	134.7	26.4	23.3	35.9	25.7	20.8
Level of Service	D	C	A	D	C	C	F	C	C	D	C	C
Approach Delay (s)		14.6			26.6			59.7			27.5	
Approach LOS		B			C			E			C	

Intersection Summary			
HCM Average Control Delay	32.2	HCM Level of Service	C
HCM Volume to Capacity ratio	0.71		
Actuated Cycle Length (s)	84.8	Sum of lost time (s)	4.0
Intersection Capacity Utilization	68.1%	ICU Level of Service	C
Analysis Period (min)	15		

c Critical Lane Group

Level Of Service Computation Report
2000 HCM 4-Way Stop Method (Future Volume Alternative)

Intersection #4 Larch Rd/Tracy Blvd

Cycle (sec): 100 Critical Vol./Cap.(X): 3.207
Loss Time (sec): 0 (Y+R=4.0 sec) Average Delay (sec/veh): 576.3
Optimal Cycle: 0 Level Of Service: F

Street Name:	Tracy Blvd						Larch Rd					
Approach:	North Bound			South Bound			East Bound			West Bound		
Movement:	L - T - R			L - T - R			L - T - R			L - T - R		
Control:	Stop Sign			Stop Sign			Stop Sign			Stop Sign		
Rights:	Include			Include			Include			Include		
Min. Green:	0	0	0	0	0	0	0	0	0	0	0	0
Lanes:	1 0 1	0 1		1 0 0	1 0		0 0 1!	0 0		0 1	0 0 1	
Volume Module:												
Base Vol:	630	330	100	10	110	10	10	600	850	160	120	20
Growth Adj:	1.00	1.00	1.00	1.00	1.00	1.00	1.00	1.00	1.00	1.00	1.00	1.00
Initial Bse:	630	330	100	10	110	10	10	600	850	160	120	20
Added Vol:	0	0	0	0	0	0	0	0	0	0	0	0
PasserByVol:	0	0	0	0	0	0	0	0	0	0	0	0
Initial Fut:	630	330	100	10	110	10	10	600	850	160	120	20
User Adj:	1.00	1.00	1.00	1.00	1.00	1.00	1.00	1.00	1.00	1.00	1.00	1.00
PHF Adj:	0.95	0.95	0.95	0.95	0.95	0.95	0.95	0.95	0.95	0.95	0.95	0.95
PHF Volume:	663	347	105	11	116	11	11	632	895	168	126	21
Reduct Vol:	0	0	0	0	0	0	0	0	0	0	0	0
Reduced Vol:	663	347	105	11	116	11	11	632	895	168	126	21
PCE Adj:	1.00	1.00	1.00	1.00	1.00	1.00	1.00	1.00	1.00	1.00	1.00	1.00
MLF Adj:	1.00	1.00	1.00	1.00	1.00	1.00	1.00	1.00	1.00	1.00	1.00	1.00
FinalVolume:	663	347	105	11	116	11	11	632	895	168	126	21
Saturation Flow Module:												
Adjustment:	1.00	1.00	1.00	1.00	1.00	1.00	1.00	1.00	1.00	1.00	1.00	1.00
Lanes:	1.00	1.00	1.00	1.00	0.92	0.08	0.01	0.41	0.58	0.57	0.43	1.00
Final Sat.:	411	435	470	365	356	32	3	197	279	235	176	461
Capacity Analysis Module:												
Vol/Sat:	1.62	0.80	0.22	0.03	0.33	0.33	3.21	3.21	3.21	0.72	0.72	0.05
Crit Moves:	****					****	****			****		
Delay/Veh:	309.8	36.5	12.4	12.6	16.0	16.0	1014	1014	1014	30.3	30.3	10.8
Delay Adj:	1.00	1.00	1.00	1.00	1.00	1.00	1.00	1.00	1.00	1.00	1.00	1.00
AdjDel/Veh:	309.8	36.5	12.4	12.6	16.0	16.0	1014	1014	1014	30.3	30.3	10.8
LOS by Move:	F	E	B	B	C	C	F	F	F	D	D	B
ApproachDel:	196.6			15.8			1014.4			29.0		
Delay Adj:	1.00			1.00			1.00			1.00		
ApprAdjDel:	196.6			15.8			1014.4			29.0		
LOS by Appr:	F			C			F			D		
AllWayAvgQ:	34.0	3.1	0.3	0.0	0.5	0.5	134	134	133.6	2.2	2.2	0.0

Note: Queue reported is the number of cars per lane.

Movement	EBL	EBT	EBR	WBL	WBT	WBR	NBL	NBT	NBR	SBL	SBT	SBR
Lane Configurations												
Volume (vph)	0	0	0	430	0	650	440	510	0	0	1080	170
Ideal Flow (vphpl)	1900	1900	1900	1900	1900	1900	1900	1900	1900	1900	1900	1900
Total Lost time (s)					4.0	4.0	4.0	4.0			4.0	
Lane Util. Factor					1.00	1.00	1.00	0.95			0.95	
Frt					1.00	0.85	1.00	1.00			0.98	
Flt Protected					0.95	1.00	0.95	1.00			1.00	
Satd. Flow (prot)					1787	1599	1787	3574			3501	
Flt Permitted					0.95	1.00	0.95	1.00			1.00	
Satd. Flow (perm)					1787	1599	1787	3574			3501	
Peak-hour factor, PHF	0.95	0.95	0.95	0.95	0.95	0.95	0.95	0.95	0.95	0.95	0.95	0.95
Adj. Flow (vph)	0	0	0	453	0	684	463	537	0	0	1137	179
RTOR Reduction (vph)	0	0	0	0	0	238	0	0	0	0	11	0
Lane Group Flow (vph)	0	0	0	0	453	446	463	537	0	0	1305	0
Heavy Vehicles (%)	0%	0%	0%	1%	1%	1%	1%	1%	1%	1%	1%	1%
Turn Type				Perm		Perm	Prot					
Protected Phases					8		5	2			6	
Permitted Phases				8		8						
Actuated Green, G (s)					32.3	32.3	21.1	65.3			40.2	
Effective Green, g (s)					32.3	32.3	21.1	66.2			41.1	
Actuated g/C Ratio					0.30	0.30	0.20	0.62			0.39	
Clearance Time (s)					4.0	4.0	4.0	4.9			4.9	
Vehicle Extension (s)					3.0	3.0	3.0	3.0			3.0	
Lane Grp Cap (vph)					542	485	354	2222			1351	
v/s Ratio Prot							c0.26	0.15			c0.37	
v/s Ratio Perm					0.25	c0.28						
v/c Ratio					0.84	0.92	1.31	0.24			0.97	
Uniform Delay, d1					34.6	35.8	42.7	9.0			32.0	
Progression Factor					1.00	1.00	1.00	1.00			1.00	
Incremental Delay, d2					10.7	22.3	157.6	0.1			16.8	
Delay (s)					45.4	58.2	200.3	9.0			48.9	
Level of Service					D	E	F	A			D	
Approach Delay (s)		0.0			53.1			97.6			48.9	
Approach LOS		A			D			F			D	

Intersection Summary			
HCM Average Control Delay	64.4	HCM Level of Service	E
HCM Volume to Capacity ratio	1.03		
Actuated Cycle Length (s)	106.5	Sum of lost time (s)	12.0
Intersection Capacity Utilization	99.0%	ICU Level of Service	F
Analysis Period (min)	15		

c Critical Lane Group

Movement	EBL	EBT	EBR	WBL	WBT	WBR	NBL	NBT	NBR	SBL	SBT	SBR
Lane Configurations												
Volume (vph)	190	0	540	0	0	0	0	760	480	760	750	0
Ideal Flow (vphpl)	1900	1900	1900	1900	1900	1900	1900	1900	1900	1900	1900	1900
Total Lost time (s)		4.0	4.0					4.0		4.0	4.0	
Lane Util. Factor		1.00	1.00					0.95		1.00	0.95	
Frt		1.00	0.85					0.94		1.00	1.00	
Flt Protected		0.95	1.00					1.00		0.95	1.00	
Satd. Flow (prot)		1787	1599					3367		1787	3574	
Flt Permitted		0.95	1.00					1.00		0.95	1.00	
Satd. Flow (perm)		1787	1599					3367		1787	3574	
Peak-hour factor, PHF	0.92	0.92	0.92	0.92	0.92	0.92	0.92	0.92	0.92	0.92	0.92	0.92
Adj. Flow (vph)	207	0	587	0	0	0	0	826	522	826	815	0
RTOR Reduction (vph)	0	0	142	0	0	0	0	96	0	0	0	0
Lane Group Flow (vph)	0	207	445	0	0	0	0	1252	0	826	815	0
Heavy Vehicles (%)	1%	1%	1%	0%	0%	0%	1%	1%	1%	1%	1%	1%
Turn Type	Perm		Perm							Prot		
Protected Phases		4						2		1	6	
Permitted Phases	4		4									
Actuated Green, G (s)		29.4	29.4					39.8		21.0	64.8	
Effective Green, g (s)		30.3	30.3					40.7		21.0	65.7	
Actuated g/C Ratio		0.29	0.29					0.39		0.20	0.63	
Clearance Time (s)		4.9	4.9					4.9		4.0	4.9	
Vehicle Extension (s)		3.0	3.0					3.0		3.0	3.0	
Lane Grp Cap (vph)		521	466					1318		361	2258	
v/s Ratio Prot								c0.37		c0.46	0.23	
v/s Ratio Perm		0.12	c0.28									
v/c Ratio		0.40	0.96					0.95		2.29	0.36	
Uniform Delay, d1		29.5	36.2					30.7		41.5	9.1	
Progression Factor		1.00	1.00					1.00		1.00	1.00	
Incremental Delay, d2		0.5	30.3					14.5		588.4	0.1	
Delay (s)		30.0	66.5					45.2		629.9	9.2	
Level of Service		C	E					D		F	A	
Approach Delay (s)		57.0			0.0			45.2			321.6	
Approach LOS		E			A			D			F	

Intersection Summary			
HCM Average Control Delay	167.6	HCM Level of Service	F
HCM Volume to Capacity ratio	1.26		
Actuated Cycle Length (s)	104.0	Sum of lost time (s)	12.0
Intersection Capacity Utilization	99.0%	ICU Level of Service	F
Analysis Period (min)	15		

c Critical Lane Group

Movement	EBL	EBT	EBR	WBL	WBT	WBR	NBL	NBT	NBR	SBL	SBT	SBR
Lane Configurations												
Volume (vph)	200	270	410	80	160	160	380	690	50	290	760	110
Ideal Flow (vphpl)	1900	1900	1900	1900	1900	1900	1900	1900	1900	1900	1900	1900
Total Lost time (s)	4.0	4.0		4.0	4.0		4.0	4.0		4.0	4.0	
Lane Util. Factor	1.00	0.95		1.00	0.95		1.00	0.95		1.00	0.95	
Frt	1.00	0.91		1.00	0.93		1.00	0.99		1.00	0.98	
Flt Protected	0.95	1.00		0.95	1.00		0.95	1.00		0.95	1.00	
Satd. Flow (prot)	1805	3283		1787	3306		1787	3538		1787	3507	
Flt Permitted	0.95	1.00		0.95	1.00		0.95	1.00		0.95	1.00	
Satd. Flow (perm)	1805	3283		1787	3306		1787	3538		1787	3507	
Peak-hour factor, PHF	0.97	0.97	0.97	0.97	0.97	0.97	0.97	0.97	0.97	0.97	0.97	0.97
Adj. Flow (vph)	206	278	423	82	165	165	392	711	52	299	784	113
RTOR Reduction (vph)	0	298	0	0	144	0	0	4	0	0	10	0
Lane Group Flow (vph)	206	403	0	82	186	0	392	759	0	299	887	0
Heavy Vehicles (%)	0%	0%	0%	1%	1%	1%	1%	1%	1%	1%	1%	1%
Turn Type	Prot			Prot			Prot			Prot		
Protected Phases	5	2		1	6		3	8		7	4	
Permitted Phases												
Actuated Green, G (s)	14.0	18.2		7.0	11.2		19.0	34.7		17.6	33.3	
Effective Green, g (s)	14.5	19.2		7.5	12.2		19.5	35.2		18.1	33.8	
Actuated g/C Ratio	0.15	0.20		0.08	0.13		0.20	0.37		0.19	0.35	
Clearance Time (s)	4.5	5.0		4.5	5.0		4.5	4.5		4.5	4.5	
Vehicle Extension (s)	1.0	3.0		1.0	3.0		1.0	3.0		1.0	3.0	
Lane Grp Cap (vph)	273	657		140	420		363	1297		337	1235	
v/s Ratio Prot	c0.11	c0.12		0.05	0.06		c0.22	0.21		0.17	c0.25	
v/s Ratio Perm												
v/c Ratio	0.75	0.61		0.59	0.44		1.08	0.58		0.89	0.72	
Uniform Delay, d1	39.0	35.0		42.7	38.8		38.2	24.5		38.0	27.0	
Progression Factor	1.00	1.00		1.00	1.00		1.00	1.00		1.00	1.00	
Incremental Delay, d2	10.0	1.7		4.0	0.7		70.3	1.9		22.7	3.6	
Delay (s)	49.1	36.7		46.7	39.5		108.5	26.4		60.7	30.6	
Level of Service	D	D		D	D		F	C		E	C	
Approach Delay (s)		39.5			40.9			54.3			38.1	
Approach LOS		D			D			D			D	

Intersection Summary			
HCM Average Control Delay	43.9	HCM Level of Service	D
HCM Volume to Capacity ratio	0.78		
Actuated Cycle Length (s)	96.0	Sum of lost time (s)	12.0
Intersection Capacity Utilization	84.0%	ICU Level of Service	E
Analysis Period (min)	15		

c Critical Lane Group

Movement	EBL	EBT	EBR	WBL	WBT	WBR	NBL	NBT	NBR	SBL	SBT	SBR
Lane Configurations												
Volume (veh/h)	370	10	310	10	10	10	110	40	10	10	40	20
Sign Control		Stop			Stop			Free			Free	
Grade		0%			0%			0%			0%	
Peak Hour Factor	0.94	0.94	0.94	0.94	0.94	0.94	0.94	0.94	0.94	0.94	0.94	0.94
Hourly flow rate (vph)	394	11	330	11	11	11	117	43	11	11	43	21
Pedestrians												
Lane Width (ft)												
Walking Speed (ft/s)												
Percent Blockage												
Right turn flare (veh)												
Median type								None			None	
Median storage veh)												
Upstream signal (ft)												
pX, platoon unblocked												
vC, conflicting volume	372	362	53	691	367	48	64			53		
vC1, stage 1 conf vol												
vC2, stage 2 conf vol												
vCu, unblocked vol	372	362	53	691	367	48	64			53		
tC, single (s)	7.1	6.5	6.2	7.1	6.5	6.2	4.1			4.1		
tC, 2 stage (s)												
tF (s)	3.5	4.0	3.3	3.5	4.0	3.3	2.2			2.2		
p0 queue free %	26	98	68	95	98	99	92			99		
cM capacity (veh/h)	535	520	1017	225	518	1027	1532			1559		

Direction, Lane #	EB 1	EB 2	WB 1	NB 1	SB 1
Volume Total	394	340	32	170	74
Volume Left	394	0	11	117	11
Volume Right	0	330	11	11	21
cSH	535	988	408	1532	1559
Volume to Capacity	0.74	0.34	0.08	0.08	0.01
Queue Length 95th (ft)	155	39	6	6	1
Control Delay (s)	28.2	10.6	14.6	5.4	1.1
Lane LOS	D	B	B	A	A
Approach Delay (s)	20.0		14.6	5.4	1.1
Approach LOS	C		B		

Intersection Summary			
Average Delay	16.0		
Intersection Capacity Utilization	49.3%	ICU Level of Service	A
Analysis Period (min)	15		

Movement	EBL	EBT	EBR	WBL	WBT	WBR	NBL	NBT	NBR	SBL	SBT	SBR
Lane Configurations												
Volume (vph)	60	400	70	40	110	50	80	230	30	230	290	70
Ideal Flow (vphpl)	1900	1900	1900	1900	1900	1900	1900	1900	1900	1900	1900	1900
Total Lost time (s)	4.0	4.0		4.0	4.0		4.0	4.0	4.0	4.0	4.0	4.0
Lane Util. Factor	1.00	0.95		1.00	0.95		1.00	1.00	1.00	1.00	1.00	1.00
Frt	1.00	0.98		1.00	0.95		1.00	1.00	0.85	1.00	1.00	0.85
Flt Protected	0.95	1.00		0.95	1.00		0.95	1.00	1.00	0.95	1.00	1.00
Satd. Flow (prot)	1805	3529		1805	3442		1805	1900	1615	1805	1900	1615
Flt Permitted	0.95	1.00		0.95	1.00		0.95	1.00	1.00	0.95	1.00	1.00
Satd. Flow (perm)	1805	3529		1805	3442		1805	1900	1615	1805	1900	1615
Peak-hour factor, PHF	0.92	0.92	0.92	0.92	0.92	0.92	0.92	0.92	0.92	0.92	0.92	0.92
Adj. Flow (vph)	65	435	76	43	120	54	87	250	33	250	315	76
RTOR Reduction (vph)	0	16	0	0	41	0	0	0	20	0	0	25
Lane Group Flow (vph)	65	495	0	43	133	0	87	250	13	250	315	51
Heavy Vehicles (%)	0%	0%	0%	0%	0%	0%	0%	0%	0%	0%	0%	0%
Turn Type	Prot			Prot			Prot		Perm	Prot		Perm
Protected Phases	1	6		5	2		3	8		7	4	
Permitted Phases									8			4
Actuated Green, G (s)	3.8	15.7		3.3	15.2		5.9	14.6	14.6	12.7	21.4	21.4
Effective Green, g (s)	4.3	16.2		3.8	15.7		6.4	15.1	15.1	13.2	21.9	21.9
Actuated g/C Ratio	0.07	0.25		0.06	0.24		0.10	0.23	0.23	0.21	0.34	0.34
Clearance Time (s)	4.5	4.5		4.5	4.5		4.5	4.5	4.5	4.5	4.5	4.5
Vehicle Extension (s)	1.0	3.0		1.0	3.0		1.0	2.0	2.0	1.0	2.0	2.0
Lane Grp Cap (vph)	121	889		107	840		180	446	379	371	647	550
v/s Ratio Prot	c0.04	c0.14		0.02	0.04		0.05	0.13		c0.14	c0.17	
v/s Ratio Perm									0.01			0.03
v/c Ratio	0.54	0.56		0.40	0.16		0.48	0.56	0.03	0.67	0.49	0.09
Uniform Delay, d1	29.0	20.9		29.2	19.1		27.4	21.7	19.0	23.6	16.8	14.4
Progression Factor	1.00	1.00		1.00	1.00		1.00	1.00	1.00	1.00	1.00	1.00
Incremental Delay, d2	2.3	0.8		0.9	0.1		0.7	1.0	0.0	3.8	0.2	0.0
Delay (s)	31.3	21.7		30.1	19.2		28.1	22.6	19.0	27.3	17.0	14.5
Level of Service	C	C		C	B		C	C	B	C	B	B
Approach Delay (s)		22.8			21.3			23.6			20.7	
Approach LOS		C			C			C			C	

Intersection Summary			
HCM Average Control Delay	22.0	HCM Level of Service	C
HCM Volume to Capacity ratio	0.51		
Actuated Cycle Length (s)	64.3	Sum of lost time (s)	8.0
Intersection Capacity Utilization	56.5%	ICU Level of Service	B
Analysis Period (min)	15		

c Critical Lane Group

Movement	EBL	EBT	EBR	WBL	WBT	WBR	NBL	NBT	NBR	SBL	SBT	SBR
Lane Configurations												
Volume (vph)	520	960	90	430	830	450	450	1780	320	470	1750	150
Ideal Flow (vphpl)	1900	1900	1900	1900	1900	1900	1900	1900	1900	1900	1900	1900
Total Lost time (s)	4.0	4.0	4.0	4.0	4.0	4.0	4.0	4.0	4.0	4.0	4.0	4.0
Lane Util. Factor	0.97	0.91	1.00	0.97	0.91	1.00	0.97	0.91	1.00	0.97	0.91	1.00
Frt	1.00	1.00	0.85	1.00	1.00	0.85	1.00	1.00	0.85	1.00	1.00	0.85
Flt Protected	0.95	1.00	1.00	0.95	1.00	1.00	0.95	1.00	1.00	0.95	1.00	1.00
Satd. Flow (prot)	3502	5187	1615	3502	5187	1615	3502	5187	1615	3502	5187	1615
Flt Permitted	0.95	1.00	1.00	0.95	1.00	1.00	0.95	1.00	1.00	0.95	1.00	1.00
Satd. Flow (perm)	3502	5187	1615	3502	5187	1615	3502	5187	1615	3502	5187	1615
Peak-hour factor, PHF	0.97	0.97	0.97	0.97	0.97	0.97	0.97	0.97	0.97	0.97	0.97	0.97
Adj. Flow (vph)	536	990	93	443	856	464	464	1835	330	485	1804	155
RTOR Reduction (vph)	0	0	0	0	0	0	0	0	81	0	0	41
Lane Group Flow (vph)	536	990	93	443	856	464	464	1835	249	485	1804	114
Heavy Vehicles (%)	0%	0%	0%	0%	0%	0%	0%	0%	0%	0%	0%	0%
Turn Type	Prot		Free	Prot		Free	Prot		Perm	Prot		Perm
Protected Phases	5	2		1	6		7	4		3	8	
Permitted Phases			Free			Free			4			8
Actuated Green, G (s)	22.0	33.9	145.4	20.4	32.3	145.4	18.0	50.1	50.1	19.0	51.1	51.1
Effective Green, g (s)	23.0	35.9	145.4	21.4	34.3	145.4	19.0	52.1	52.1	20.0	53.1	53.1
Actuated g/C Ratio	0.16	0.25	1.00	0.15	0.24	1.00	0.13	0.36	0.36	0.14	0.37	0.37
Clearance Time (s)	5.0	6.0		5.0	6.0		5.0	6.0	6.0	5.0	6.0	6.0
Vehicle Extension (s)	3.0	3.0		3.0	3.0		3.0	3.0	3.0	3.0	3.0	3.0
Lane Grp Cap (vph)	554	1281	1615	515	1224	1615	458	1859	579	482	1894	590
v/s Ratio Prot	c0.15	c0.19		0.13	0.17		0.13	c0.35		c0.14	0.35	
v/s Ratio Perm			0.06			c0.29			0.15			0.07
v/c Ratio	0.97	0.77	0.06	0.86	0.70	0.29	1.01	0.99	0.43	1.01	0.95	0.19
Uniform Delay, d1	60.8	51.0	0.0	60.5	50.8	0.0	63.2	46.3	35.4	62.7	44.9	31.5
Progression Factor	1.00	1.00	1.00	1.00	1.00	1.00	1.00	1.00	1.00	1.00	1.00	1.00
Incremental Delay, d2	29.8	3.0	0.1	13.7	1.8	0.4	45.4	17.7	0.5	42.5	11.4	0.2
Delay (s)	90.6	53.9	0.1	74.2	52.6	0.4	108.6	64.0	35.9	105.2	56.3	31.7
Level of Service	F	D	A	E	D	A	F	E	D	F	E	C
Approach Delay (s)		63.0			44.3			68.4			64.5	
Approach LOS		E			D			E			E	

Intersection Summary			
HCM Average Control Delay	61.2	HCM Level of Service	E
HCM Volume to Capacity ratio	0.92		
Actuated Cycle Length (s)	145.4	Sum of lost time (s)	12.0
Intersection Capacity Utilization	92.0%	ICU Level of Service	F
Analysis Period (min)	15		

c Critical Lane Group

Movement	EBL	EBT	EBR	WBL	WBT	WBR	NBL	NBT	NBR	SBL	SBT	SBR
Lane Configurations												
Volume (vph)	340	540	570	60	350	140	610	480	90	110	530	350
Ideal Flow (vphpl)	1900	1900	1900	1900	1900	1900	1900	1900	1900	1900	1900	1900
Total Lost time (s)	4.0	4.0	4.0	4.0	4.0	4.0	4.0	4.0	4.0	4.0	4.0	4.0
Lane Util. Factor	0.97	0.95	1.00	0.97	0.95	1.00	0.97	0.95	1.00	0.97	0.95	1.00
Frt	1.00	1.00	0.85	1.00	1.00	0.85	1.00	1.00	0.85	1.00	1.00	0.85
Flt Protected	0.95	1.00	1.00	0.95	1.00	1.00	0.95	1.00	1.00	0.95	1.00	1.00
Satd. Flow (prot)	3502	3610	1615	3502	3610	1615	3502	3610	1615	3502	3610	1615
Flt Permitted	0.95	1.00	1.00	0.95	1.00	1.00	0.95	1.00	1.00	0.95	1.00	1.00
Satd. Flow (perm)	3502	3610	1615	3502	3610	1615	3502	3610	1615	3502	3610	1615
Peak-hour factor, PHF	0.96	0.96	0.96	0.96	0.96	0.96	0.96	0.96	0.96	0.96	0.96	0.96
Adj. Flow (vph)	354	562	594	62	365	146	635	500	94	115	552	365
RTOR Reduction (vph)	0	0	306	0	0	117	0	0	48	0	0	124
Lane Group Flow (vph)	354	562	288	62	365	29	635	500	46	115	552	241
Heavy Vehicles (%)	0%	0%	0%	0%	0%	0%	0%	0%	0%	0%	0%	0%
Turn Type	Prot		Perm	Prot		Perm	Prot		Perm	Prot		Perm
Protected Phases	5	2		1	6		3	8		7	4	
Permitted Phases			2			6			8			4
Actuated Green, G (s)	14.0	25.4	25.4	5.2	16.6	16.6	20.6	33.7	33.7	7.7	20.8	20.8
Effective Green, g (s)	14.5	26.9	26.9	5.7	18.1	18.1	21.1	35.2	35.2	8.2	22.3	22.3
Actuated g/C Ratio	0.16	0.29	0.29	0.06	0.20	0.20	0.23	0.38	0.38	0.09	0.24	0.24
Clearance Time (s)	4.5	5.5	5.5	4.5	5.5	5.5	4.5	5.5	5.5	4.5	5.5	5.5
Vehicle Extension (s)	2.0	2.5	2.5	2.0	2.5	2.5	2.0	2.0	2.0	2.0	2.0	2.0
Lane Grp Cap (vph)	552	1056	472	217	710	318	803	1381	618	312	875	391
v/s Ratio Prot	c0.10	0.16		0.02	0.10		c0.18	0.14		0.03	c0.15	
v/s Ratio Perm			c0.18			0.02			0.03			0.15
v/c Ratio	0.64	0.53	0.61	0.29	0.51	0.09	0.79	0.36	0.08	0.37	0.63	0.62
Uniform Delay, d1	36.3	27.3	28.0	41.2	33.0	30.2	33.4	20.4	18.1	39.5	31.2	31.0
Progression Factor	1.00	1.00	1.00	1.00	1.00	1.00	1.00	1.00	1.00	1.00	1.00	1.00
Incremental Delay, d2	1.9	0.4	1.9	0.3	0.5	0.1	5.0	0.1	0.0	0.3	1.1	2.0
Delay (s)	38.2	27.7	29.9	41.5	33.5	30.3	38.4	20.4	18.1	39.7	32.3	33.1
Level of Service	D	C	C	D	C	C	D	C	B	D	C	C
Approach Delay (s)		31.0			33.5			29.5			33.4	
Approach LOS		C			C			C			C	

Intersection Summary			
HCM Average Control Delay	31.5	HCM Level of Service	C
HCM Volume to Capacity ratio	0.66		
Actuated Cycle Length (s)	92.0	Sum of lost time (s)	12.0
Intersection Capacity Utilization	65.3%	ICU Level of Service	C
Analysis Period (min)	15		

c Critical Lane Group

Movement	EBL	EBT	EBR	WBL	WBT	WBR	NBL	NBT	NBR	SBL	SBT	SBR
Lane Configurations												
Volume (vph)	60	510	100	90	310	60	100	120	110	90	120	90
Ideal Flow (vphpl)	1900	1900	1900	1900	1900	1900	1900	1900	1900	1900	1900	1900
Total Lost time (s)	4.0	4.0		4.0	4.0		4.0	4.0		4.0	4.0	4.0
Lane Util. Factor	1.00	0.95		1.00	0.95		1.00	1.00		1.00	1.00	1.00
Frt	1.00	0.98		1.00	0.98		1.00	0.93		1.00	1.00	0.85
Flt Protected	0.95	1.00		0.95	1.00		0.95	1.00		0.95	1.00	1.00
Satd. Flow (prot)	1805	3521		1787	3488		1787	1746		1805	1900	1615
Flt Permitted	0.95	1.00		0.95	1.00		0.95	1.00		0.95	1.00	1.00
Satd. Flow (perm)	1805	3521		1787	3488		1787	1746		1805	1900	1615
Peak-hour factor, PHF	0.98	0.98	0.98	0.98	0.98	0.98	0.98	0.98	0.98	0.98	0.98	0.98
Adj. Flow (vph)	61	520	102	92	316	61	102	122	112	92	122	92
RTOR Reduction (vph)	0	15	0	0	14	0	0	30	0	0	0	73
Lane Group Flow (vph)	61	607	0	92	363	0	102	204	0	92	122	19
Heavy Vehicles (%)	0%	0%	0%	1%	1%	1%	1%	1%	1%	0%	0%	0%
Turn Type	Prot			Prot			Prot			Prot		Perm
Protected Phases	1	6		5	2		3	8		7	4	
Permitted Phases												4
Actuated Green, G (s)	4.2	21.7		6.6	24.1		6.9	13.1		6.6	12.8	12.8
Effective Green, g (s)	4.2	22.2		6.6	24.6		6.9	13.6		6.6	13.3	13.3
Actuated g/C Ratio	0.06	0.34		0.10	0.38		0.11	0.21		0.10	0.20	0.20
Clearance Time (s)	4.0	4.5		4.0	4.5		4.0	4.5		4.0	4.5	4.5
Vehicle Extension (s)	2.0	5.0		2.0	3.0		2.0	2.0		2.0	2.0	2.0
Lane Grp Cap (vph)	117	1203		181	1320		190	365		183	389	330
v/s Ratio Prot	0.03	c0.17		c0.05	0.10		c0.06	c0.12		0.05	0.06	
v/s Ratio Perm												0.01
v/c Ratio	0.52	0.50		0.51	0.28		0.54	0.56		0.50	0.31	0.06
Uniform Delay, d1	29.4	17.0		27.7	14.0		27.5	23.0		27.6	22.0	20.8
Progression Factor	1.00	1.00		1.00	1.00		1.00	1.00		1.00	1.00	1.00
Incremental Delay, d2	1.9	0.7		0.8	0.1		1.5	1.1		0.8	0.2	0.0
Delay (s)	31.4	17.7		28.5	14.1		29.0	24.1		28.4	22.1	20.8
Level of Service	C	B		C	B		C	C		C	C	C
Approach Delay (s)		18.9			16.9			25.6			23.6	
Approach LOS		B			B			C			C	

Intersection Summary			
HCM Average Control Delay	20.5	HCM Level of Service	C
HCM Volume to Capacity ratio	0.48		
Actuated Cycle Length (s)	65.0	Sum of lost time (s)	12.0
Intersection Capacity Utilization	53.6%	ICU Level of Service	A
Analysis Period (min)	15		

c Critical Lane Group

Movement	EBL	EBT	EBR	WBL	WBT	WBR	NBL	NBT	NBR	SBL	SBT	SBR
Lane Configurations												
Volume (veh/h)	30	1040	740	180	410	52	690	171	430	19	100	10
Sign Control		Stop			Stop			Free			Free	
Grade		0%			0%			0%			0%	
Peak Hour Factor	0.92	0.92	0.92	0.92	0.92	0.92	0.92	0.92	0.92	0.92	0.92	0.92
Hourly flow rate (vph)	33	1130	804	196	446	57	750	186	467	21	109	11
Pedestrians												
Lane Width (ft)												
Walking Speed (ft/s)												
Percent Blockage												
Right turn flare (veh)												
Median type								None			None	
Median storage veh)												
Upstream signal (ft)												
pX, platoon unblocked												
vC, conflicting volume	2354	2309	114	3445	2080	420	120			653		
vC1, stage 1 conf vol												
vC2, stage 2 conf vol												
vCu, unblocked vol	2354	2309	114	3445	2080	420	120			653		
tC, single (s)	7.1	6.5	6.2	7.1	6.5	6.2	4.1			4.1		
tC, 2 stage (s)												
tF (s)	3.5	4.0	3.3	3.5	4.0	3.3	2.2			2.2		
p0 queue free %	0	0	15	0	0	91	49			98		
cM capacity (veh/h)	0	19	944	0	26	638	1468			934		

Direction, Lane #	EB 1	WB 1	NB 1	SB 1
Volume Total	1967	698	1403	140
Volume Left	33	196	750	21
Volume Right	804	57	467	11
cSH	0	0	1468	934
Volume to Capacity	Err	Err	0.51	0.02
Queue Length 95th (ft)	Err	Err	76	2
Control Delay (s)	Err	Err	9.2	1.5
Lane LOS	F	F	A	A
Approach Delay (s)	Err	Err	9.2	1.5
Approach LOS	F	F		

Intersection Summary			
Average Delay	Err		
Intersection Capacity Utilization	226.4%	ICU Level of Service	H
Analysis Period (min)	15		

Movement	EBL	EBR	NBL	NBT	SBT	SBR
Lane Configurations						
Volume (vph)	240	340	280	1151	1270	90
Ideal Flow (vphpl)	1900	1900	1900	1900	1900	1900
Total Lost time (s)	4.0	4.0	4.0	4.0	4.0	
Lane Util. Factor	1.00	1.00	1.00	0.95	0.95	
Frt	1.00	0.85	1.00	1.00	0.99	
Flt Protected	0.95	1.00	0.95	1.00	1.00	
Satd. Flow (prot)	1787	1599	1805	3610	3539	
Flt Permitted	0.95	1.00	0.95	1.00	1.00	
Satd. Flow (perm)	1787	1599	1805	3610	3539	
Peak-hour factor, PHF	0.96	0.96	0.96	0.96	0.96	0.96
Adj. Flow (vph)	250	354	292	1199	1323	94
RTOR Reduction (vph)	0	291	0	0	7	0
Lane Group Flow (vph)	250	63	292	1199	1410	0
Heavy Vehicles (%)	1%	1%	0%	0%	1%	1%
Turn Type		Perm	Prot			
Protected Phases	2		3	8	4	
Permitted Phases		2				
Actuated Green, G (s)	11.8	11.8	13.6	45.8	27.7	
Effective Green, g (s)	11.8	11.8	14.1	46.3	28.2	
Actuated g/C Ratio	0.18	0.18	0.21	0.70	0.43	
Clearance Time (s)	4.0	4.0	4.5	4.5	4.5	
Vehicle Extension (s)	2.0	2.0	2.0	2.5	2.5	
Lane Grp Cap (vph)	319	285	385	2529	1510	
v/s Ratio Prot	c0.14		c0.16	0.33	c0.40	
v/s Ratio Perm		0.04				
v/c Ratio	0.78	0.22	0.76	0.47	0.93	
Uniform Delay, d1	25.9	23.2	24.4	4.4	18.1	
Progression Factor	1.00	1.00	1.00	1.00	1.00	
Incremental Delay, d2	11.0	0.1	7.4	0.1	10.9	
Delay (s)	37.0	23.4	31.8	4.5	28.9	
Level of Service	D	C	C	A	C	
Approach Delay (s)	29.0			9.9	28.9	
Approach LOS	C			A	C	

Intersection Summary			
HCM Average Control Delay	20.9	HCM Level of Service	C
HCM Volume to Capacity ratio	0.86		
Actuated Cycle Length (s)	66.1	Sum of lost time (s)	12.0
Intersection Capacity Utilization	76.8%	ICU Level of Service	D
Analysis Period (min)	15		

c Critical Lane Group

Movement	EBL	EBT	EBR	WBL	WBT	WBR	NBL	NBT	NBR	SBL	SBT	SBR
Lane Configurations												
Volume (vph)	122	1020	1100	240	650	124	490	902	360	253	896	112
Ideal Flow (vphpl)	1900	1900	1900	1900	1900	1900	1900	1900	1900	1900	1900	1900
Total Lost time (s)	4.0	4.0	4.0	4.0	4.0	4.0	4.0	4.0	4.0	4.0	4.0	4.0
Lane Util. Factor	0.97	0.91	1.00	0.97	0.91	1.00	0.97	0.91	1.00	0.97	0.91	1.00
Frt	1.00	1.00	0.85	1.00	1.00	0.85	1.00	1.00	0.85	1.00	1.00	0.85
Flt Protected	0.95	1.00	1.00	0.95	1.00	1.00	0.95	1.00	1.00	0.95	1.00	1.00
Satd. Flow (prot)	3502	5187	1615	3502	5187	1615	3502	5187	1615	3467	5136	1599
Flt Permitted	0.95	1.00	1.00	0.95	1.00	1.00	0.95	1.00	1.00	0.95	1.00	1.00
Satd. Flow (perm)	3502	5187	1615	3502	5187	1615	3502	5187	1615	3467	5136	1599
Peak-hour factor, PHF	0.96	0.96	0.96	0.96	0.96	0.96	0.96	0.96	0.96	0.96	0.96	0.96
Adj. Flow (vph)	127	1062	1146	250	677	129	510	940	375	264	933	117
RTOR Reduction (vph)	0	0	0	0	0	93	0	0	92	0	0	80
Lane Group Flow (vph)	127	1062	1146	250	677	36	510	940	283	264	933	37
Heavy Vehicles (%)	0%	0%	0%	0%	0%	0%	0%	0%	0%	1%	1%	1%
Turn Type	Prot		Free	Prot		Perm	Prot		Perm	Prot		Perm
Protected Phases	7	4		3	8		5	2		1	6	
Permitted Phases			Free			8			2			6
Actuated Green, G (s)	6.4	30.0	110.0	6.0	29.6	29.6	18.9	42.5	42.5	9.5	33.1	33.1
Effective Green, g (s)	7.9	31.5	110.0	7.5	31.1	31.1	20.4	44.0	44.0	11.0	34.6	34.6
Actuated g/C Ratio	0.07	0.29	1.00	0.07	0.28	0.28	0.19	0.40	0.40	0.10	0.31	0.31
Clearance Time (s)	5.5	5.5		5.5	5.5	5.5	5.5	5.5	5.5	5.5	5.5	5.5
Vehicle Extension (s)	2.0	3.0		2.0	3.0	3.0	2.0	3.0	3.0	2.0	3.0	3.0
Lane Grp Cap (vph)	252	1485	1615	239	1467	457	649	2075	646	347	1616	503
v/s Ratio Prot	0.04	0.20		0.07	0.13		0.15	0.18		0.08	0.18	
v/s Ratio Perm			c0.71			0.02			0.17			0.02
v/c Ratio	0.50	0.72	0.71	1.05	0.46	0.08	0.79	0.45	0.44	0.76	0.58	0.07
Uniform Delay, d1	49.2	35.2	0.0	51.2	32.5	28.9	42.7	24.2	24.0	48.2	31.6	26.5
Progression Factor	1.00	1.00	1.00	1.00	1.00	1.00	1.00	1.00	1.00	1.00	1.00	1.00
Incremental Delay, d2	0.6	1.7	2.7	70.8	0.2	0.1	9.3	0.7	2.1	8.6	0.5	0.1
Delay (s)	49.7	36.9	2.7	122.0	32.8	29.0	52.0	24.9	26.1	56.8	32.1	26.5
Level of Service	D	D	A	F	C	C	D	C	C	E	C	C
Approach Delay (s)		20.8			53.4			32.7			36.5	
Approach LOS		C			D			C			D	

Intersection Summary			
HCM Average Control Delay	32.6	HCM Level of Service	C
HCM Volume to Capacity ratio	0.71		
Actuated Cycle Length (s)	110.0	Sum of lost time (s)	0.0
Intersection Capacity Utilization	71.2%	ICU Level of Service	C
Analysis Period (min)	15		

c Critical Lane Group

Level Of Service Computation Report
2000 HCM 4-Way Stop Method (Future Volume Alternative)

****

Intersection #4 Larch Rd/Tracy Blvd

****

Cycle (sec): 100 Critical Vol./Cap.(X): 3.881
Loss Time (sec): 0 (Y+R=4.0 sec) Average Delay (sec/veh): 668.7
Optimal Cycle: 0 Level Of Service: F

****

Street Name:	Tracy Blvd						Larch Rd					
Approach:	North Bound			South Bound			East Bound			West Bound		
Movement:	L - T - R			L - T - R			L - T - R			L - T - R		
Control:	Stop Sign			Stop Sign			Stop Sign			Stop Sign		
Rights:	Include			Include			Include			Include		
Min. Green:	0	0	0	0	0	0	0	0	0	0	0	0
Lanes:	1 0 1	0 1		1 0 0 1	0		0 0 1!	0 0		0 1	0 0 1	
Volume Module:												
Base Vol:	480	190	140	10	100	10	10	630	840	220	140	20
Growth Adj:	1.00	1.00	1.00	1.00	1.00	1.00	1.00	1.00	1.00	1.00	1.00	1.00
Initial Bse:	480	190	140	10	100	10	10	630	840	220	140	20
Added Vol:	12	201	0	35	149	0	0	0	9	0	0	48
PasserByVol:	0	0	0	0	0	0	0	0	0	0	0	0
Initial Fut:	492	391	140	45	249	10	10	630	849	220	140	68
User Adj:	1.00	1.00	1.00	1.00	1.00	1.00	1.00	1.00	1.00	1.00	1.00	1.00
PHF Adj:	0.95	0.95	0.95	0.95	0.95	0.95	0.95	0.95	0.95	0.95	0.95	0.95
PHF Volume:	518	412	147	47	262	11	11	663	894	232	147	72
Reduct Vol:	0	0	0	0	0	0	0	0	0	0	0	0
Reduced Vol:	518	412	147	47	262	11	11	663	894	232	147	72
PCE Adj:	1.00	1.00	1.00	1.00	1.00	1.00	1.00	1.00	1.00	1.00	1.00	1.00
MLF Adj:	1.00	1.00	1.00	1.00	1.00	1.00	1.00	1.00	1.00	1.00	1.00	1.00
FinalVolume:	518	412	147	47	262	11	11	663	894	232	147	72
Saturation Flow Module:												
Adjustment:	1.00	1.00	1.00	1.00	1.00	1.00	1.00	1.00	1.00	1.00	1.00	1.00
Lanes:	1.00	1.00	1.00	1.00	0.96	0.04	0.01	0.42	0.57	0.61	0.39	1.00
Final Sat.:	356	375	403	350	355	14	3	171	230	230	146	417
Capacity Analysis Module:												
Vol/Sat:	1.45	1.10	0.37	0.14	0.74	0.74	3.88	3.88	3.88	1.01	1.01	0.17
Crit Moves:	****				****			****		****		
Delay/Veh:	244.5	106	16.6	14.5	35.2	35.2	1320	1320	1320	79.2	79.2	13.0
Delay Adj:	1.00	1.00	1.00	1.00	1.00	1.00	1.00	1.00	1.00	1.00	1.00	1.00
AdjDel/Veh:	244.5	106	16.6	14.5	35.2	35.2	1320	1320	1320	79.2	79.2	13.0
LOS by Move:	F	F	C	B	E	E	F	F	F	F	F	B
ApproachDel:	160.4			32.1			1320.3			68.7		
Delay Adj:	1.00			1.00			1.00			1.00		
ApprAdjDel:	160.4			32.1			1320.3			68.7		
LOS by Appr:	F			D			F			F		
AllWayAvgQ:	22.9	9.8	0.6	0.2	2.3	2.3	147	147	146.8	7.0	7.0	0.2

****

Note: Queue reported is the number of cars per lane.

****

Movement	EBL	EBT	EBR	WBL	WBT	WBR	NBL	NBT	NBR	SBL	SBT	SBR
Lane Configurations												
Volume (vph)	0	0	0	470	0	478	360	645	0	0	1243	165
Ideal Flow (vphpl)	1900	1900	1900	1900	1900	1900	1900	1900	1900	1900	1900	1900
Total Lost time (s)					4.0	4.0	4.0	4.0			4.0	
Lane Util. Factor					1.00	1.00	1.00	0.95			0.95	
Frt					1.00	0.85	1.00	1.00			0.98	
Flt Protected					0.95	1.00	0.95	1.00			1.00	
Satd. Flow (prot)					1752	1568	1752	3539			3477	
Flt Permitted					0.95	1.00	0.95	1.00			1.00	
Satd. Flow (perm)					1752	1568	1752	3539			3477	
Peak-hour factor, PHF	0.94	0.94	0.94	0.94	0.94	0.94	0.94	0.94	0.94	0.94	0.94	0.94
Adj. Flow (vph)	0	0	0	500	0	509	383	686	0	0	1322	176
RTOR Reduction (vph)	0	0	0	0	0	169	0	0	0	0	9	0
Lane Group Flow (vph)	0	0	0	0	500	340	383	686	0	0	1489	0
Heavy Vehicles (%)	0%	0%	0%	3%	3%	3%	3%	2%	3%	2%	2%	2%
Turn Type				Perm		Perm	Prot					
Protected Phases					8		5	2			6	
Permitted Phases				8		8						
Actuated Green, G (s)					33.9	33.9	21.0	65.2			40.2	
Effective Green, g (s)					33.9	33.9	21.0	66.1			41.1	
Actuated g/C Ratio					0.31	0.31	0.19	0.61			0.38	
Clearance Time (s)					4.0	4.0	4.0	4.9			4.9	
Vehicle Extension (s)					3.0	3.0	3.0	3.0			3.0	
Lane Grp Cap (vph)					550	492	341	2166			1323	
v/s Ratio Prot							c0.22	0.19			c0.43	
v/s Ratio Perm					0.29	0.22						
v/c Ratio					0.91	0.69	1.12	0.32			1.13	
Uniform Delay, d1					35.6	32.5	43.5	10.1			33.5	
Progression Factor					1.00	1.00	1.00	1.00			1.00	
Incremental Delay, d2					18.8	4.2	86.3	0.1			66.7	
Delay (s)					54.4	36.6	129.8	10.2			100.1	
Level of Service					D	D	F	B			F	
Approach Delay (s)		0.0			45.4			53.0			100.1	
Approach LOS		A			D			D			F	

Intersection Summary			
HCM Average Control Delay	70.6	HCM Level of Service	E
HCM Volume to Capacity ratio	1.05		
Actuated Cycle Length (s)	108.0	Sum of lost time (s)	12.0
Intersection Capacity Utilization	99.0%	ICU Level of Service	F
Analysis Period (min)	15		

c Critical Lane Group

Movement	EBL	EBT	EBR	WBL	WBT	WBR	NBL	NBT	NBR	SBL	SBT	SBR
Lane Configurations												
Volume (vph)	126	0	520	0	0	0	0	879	450	781	933	0
Ideal Flow (vphpl)	1900	1900	1900	1900	1900	1900	1900	1900	1900	1900	1900	1900
Total Lost time (s)		4.0	4.0					4.0		4.0	4.0	
Lane Util. Factor		1.00	1.00					0.95		1.00	0.95	
Frt		1.00	0.85					0.95		1.00	1.00	
Flt Protected		0.95	1.00					1.00		0.95	1.00	
Satd. Flow (prot)		1752	1568					3359		1787	3574	
Flt Permitted		0.95	1.00					1.00		0.95	1.00	
Satd. Flow (perm)		1752	1568					3359		1787	3574	
Peak-hour factor, PHF	0.95	0.95	0.95	0.95	0.95	0.95	0.95	0.95	0.95	0.95	0.95	0.95
Adj. Flow (vph)	133	0	547	0	0	0	0	925	474	822	982	0
RTOR Reduction (vph)	0	0	98	0	0	0	0	62	0	0	0	0
Lane Group Flow (vph)	0	133	449	0	0	0	0	1337	0	822	982	0
Heavy Vehicles (%)	3%	3%	3%	0%	0%	0%	2%	2%	2%	1%	1%	1%
Turn Type	Perm		Perm							Prot		
Protected Phases		4						2		1	6	
Permitted Phases	4		4									
Actuated Green, G (s)		30.1	30.1					40.1		21.0	65.1	
Effective Green, g (s)		31.0	31.0					41.0		21.0	66.0	
Actuated g/C Ratio		0.30	0.30					0.39		0.20	0.63	
Clearance Time (s)		4.9	4.9					4.9		4.0	4.9	
Vehicle Extension (s)		3.0	3.0					3.0		3.0	3.0	
Lane Grp Cap (vph)		517	463					1312		357	2247	
v/s Ratio Prot								c0.40		c0.46	0.27	
v/s Ratio Perm		0.08	c0.29									
v/c Ratio		0.26	0.97					1.02		2.30	0.44	
Uniform Delay, d1		28.2	36.5					32.0		42.0	10.0	
Progression Factor		1.00	1.00					1.00		1.00	1.00	
Incremental Delay, d2		0.3	33.6					29.7		594.9	0.1	
Delay (s)		28.5	70.2					61.7		636.9	10.1	
Level of Service		C	E					E		F	B	
Approach Delay (s)		62.0			0.0			61.7			295.7	
Approach LOS		E			A			E			F	

Intersection Summary			
HCM Average Control Delay	170.5	HCM Level of Service	F
HCM Volume to Capacity ratio	1.29		
Actuated Cycle Length (s)	105.0	Sum of lost time (s)	12.0
Intersection Capacity Utilization	99.0%	ICU Level of Service	F
Analysis Period (min)	15		

c Critical Lane Group

Movement	EBL	EBT	EBR	WBL	WBT	WBR	NBL	NBT	NBR	SBL	SBT	SBR
Lane Configurations												
Volume (vph)	224	430	410	90	260	182	370	779	120	269	833	113
Ideal Flow (vphpl)	1900	1900	1900	1900	1900	1900	1900	1900	1900	1900	1900	1900
Total Lost time (s)	4.0	4.0		4.0	4.0		4.0	4.0		4.0	4.0	
Lane Util. Factor	1.00	0.95		1.00	0.95		1.00	0.95		1.00	0.95	
Frt	1.00	0.93		1.00	0.94		1.00	0.98		1.00	0.98	
Flt Protected	0.95	1.00		0.95	1.00		0.95	1.00		0.95	1.00	
Satd. Flow (prot)	1805	3346		1787	3353		1787	3503		1787	3510	
Flt Permitted	0.95	1.00		0.95	1.00		0.95	1.00		0.95	1.00	
Satd. Flow (perm)	1805	3346		1787	3353		1787	3503		1787	3510	
Peak-hour factor, PHF	0.95	0.95	0.95	0.95	0.95	0.95	0.95	0.95	0.95	0.95	0.95	0.95
Adj. Flow (vph)	236	453	432	95	274	192	389	820	126	283	877	119
RTOR Reduction (vph)	0	174	0	0	143	0	0	11	0	0	10	0
Lane Group Flow (vph)	236	711	0	95	323	0	389	935	0	283	986	0
Heavy Vehicles (%)	0%	0%	0%	1%	1%	1%	1%	1%	1%	1%	1%	1%
Turn Type	Prot			Prot			Prot			Prot		
Protected Phases	5	2		1	6		3	8		7	4	
Permitted Phases												
Actuated Green, G (s)	15.2	22.9		7.7	15.4		19.0	29.8		17.1	27.9	
Effective Green, g (s)	15.7	23.9		8.2	16.4		19.5	30.3		17.6	28.4	
Actuated g/C Ratio	0.16	0.25		0.09	0.17		0.20	0.32		0.18	0.30	
Clearance Time (s)	4.5	5.0		4.5	5.0		4.5	4.5		4.5	4.5	
Vehicle Extension (s)	1.0	3.0		1.0	3.0		1.0	3.0		1.0	3.0	
Lane Grp Cap (vph)	295	833		153	573		363	1106		328	1038	
v/s Ratio Prot	c0.13	c0.21		0.05	0.10		c0.22	0.27		0.16	c0.28	
v/s Ratio Perm												
v/c Ratio	0.80	0.85		0.62	0.56		1.07	0.85		0.86	0.95	
Uniform Delay, d1	38.6	34.4		42.4	36.5		38.2	30.7		38.0	33.1	
Progression Factor	1.00	1.00		1.00	1.00		1.00	1.00		1.00	1.00	
Incremental Delay, d2	13.6	8.5		5.5	1.3		67.6	8.0		19.6	18.2	
Delay (s)	52.2	42.8		47.9	37.8		105.9	38.6		57.6	51.3	
Level of Service	D	D		D	D		F	D		E	D	
Approach Delay (s)		44.8			39.5			58.2			52.7	
Approach LOS		D			D			E			D	

Intersection Summary			
HCM Average Control Delay	50.6	HCM Level of Service	D
HCM Volume to Capacity ratio	0.91		
Actuated Cycle Length (s)	96.0	Sum of lost time (s)	12.0
Intersection Capacity Utilization	90.5%	ICU Level of Service	E
Analysis Period (min)	15		

c Critical Lane Group

Movement	EBL	EBT	EBR	WBL	WBT	WBR	NBL	NBT	NBR	SBL	SBT	SBR
Lane Configurations												
Volume (veh/h)	410	10	385	10	10	10	158	40	10	10	40	50
Sign Control		Stop			Stop			Free			Free	
Grade		0%			0%			0%			0%	
Peak Hour Factor	0.92	0.92	0.92	0.92	0.92	0.92	0.92	0.92	0.92	0.92	0.92	0.92
Hourly flow rate (vph)	446	11	418	11	11	11	172	43	11	11	43	54
Pedestrians												
Lane Width (ft)												
Walking Speed (ft/s)												
Percent Blockage												
Right turn flare (veh)												
Median type								None			None	
Median storage veh)												
Upstream signal (ft)												
pX, platoon unblocked												
vC, conflicting volume	501	490	71	909	512	49	98			54		
vC1, stage 1 conf vol												
vC2, stage 2 conf vol												
vCu, unblocked vol	501	490	71	909	512	49	98			54		
tC, single (s)	7.1	6.5	6.2	7.1	6.5	6.2	4.1			4.1		
tC, 2 stage (s)												
tF (s)	3.5	4.0	3.3	3.5	4.0	3.3	2.2			2.2		
p0 queue free %	0	97	58	92	97	99	88			99		
cM capacity (veh/h)	424	422	995	133	411	1025	1489			1557		

Direction, Lane #	EB 1	EB 2	WB 1	NB 1	SB 1
Volume Total	446	429	33	226	109
Volume Left	446	0	11	172	11
Volume Right	0	418	11	11	54
cSH	424	962	275	1489	1557
Volume to Capacity	1.05	0.45	0.12	0.12	0.01
Queue Length 95th (ft)	359	58	10	10	1
Control Delay (s)	89.4	11.7	19.9	6.1	0.8
Lane LOS	F	B	C	A	A
Approach Delay (s)	51.3		19.9	6.1	0.8
Approach LOS	F		C		

Intersection Summary			
Average Delay	37.8		
Intersection Capacity Utilization	54.2%	ICU Level of Service	A
Analysis Period (min)	15		

Movement	EBL	EBT	EBR	WBL	WBT	WBR	NBL	NBT	NBR	SBL	SBT	SBR
Lane Configurations												
Volume (vph)	100	557	50	50	149	60	100	297	50	270	327	80
Ideal Flow (vphpl)	1900	1900	1900	1900	1900	1900	1900	1900	1900	1900	1900	1900
Total Lost time (s)	4.0	4.0		4.0	4.0		4.0	4.0	4.0	4.0	4.0	4.0
Lane Util. Factor	1.00	0.95		1.00	0.95		1.00	1.00	1.00	1.00	1.00	1.00
Frt	1.00	0.99		1.00	0.96		1.00	1.00	0.85	1.00	1.00	0.85
Flt Protected	0.95	1.00		0.95	1.00		0.95	1.00	1.00	0.95	1.00	1.00
Satd. Flow (prot)	1805	3566		1805	3455		1805	1900	1615	1805	1900	1615
Flt Permitted	0.95	1.00		0.95	1.00		0.95	1.00	1.00	0.95	1.00	1.00
Satd. Flow (perm)	1805	3566		1805	3455		1805	1900	1615	1805	1900	1615
Peak-hour factor, PHF	0.92	0.92	0.92	0.92	0.92	0.92	0.92	0.92	0.92	0.92	0.92	0.92
Adj. Flow (vph)	109	605	54	54	162	65	109	323	54	293	355	87
RTOR Reduction (vph)	0	7	0	0	49	0	0	0	25	0	0	25
Lane Group Flow (vph)	109	652	0	54	178	0	109	323	29	293	355	62
Heavy Vehicles (%)	0%	0%	0%	0%	0%	0%	0%	0%	0%	0%	0%	0%
Turn Type	Prot			Prot			Prot		Perm	Prot		Perm
Protected Phases	1	6		5	2		3	8		7	4	
Permitted Phases									8			4
Actuated Green, G (s)	6.8	19.5		3.8	16.5		6.8	17.5	17.5	15.3	26.0	26.0
Effective Green, g (s)	7.3	20.0		4.3	17.0		7.3	18.0	18.0	15.8	26.5	26.5
Actuated g/C Ratio	0.10	0.27		0.06	0.23		0.10	0.24	0.24	0.21	0.36	0.36
Clearance Time (s)	4.5	4.5		4.5	4.5		4.5	4.5	4.5	4.5	4.5	4.5
Vehicle Extension (s)	1.0	3.0		1.0	3.0		1.0	2.0	2.0	1.0	2.0	2.0
Lane Grp Cap (vph)	178	962		105	793		178	462	392	385	679	578
v/s Ratio Prot	c0.06	c0.18		0.03	0.05		0.06	c0.17		c0.16	0.19	
v/s Ratio Perm									0.02			0.04
v/c Ratio	0.61	0.68		0.51	0.22		0.61	0.70	0.07	0.76	0.52	0.11
Uniform Delay, d1	32.0	24.2		33.9	23.2		32.0	25.6	21.6	27.4	18.8	15.9
Progression Factor	1.00	1.00		1.00	1.00		1.00	1.00	1.00	1.00	1.00	1.00
Incremental Delay, d2	4.3	1.9		1.8	0.1		4.3	3.7	0.0	7.8	0.3	0.0
Delay (s)	36.4	26.1		35.7	23.3		36.4	29.3	21.7	35.2	19.1	15.9
Level of Service	D	C		D	C		D	C	C	D	B	B
Approach Delay (s)		27.5			25.7			30.0			25.1	
Approach LOS		C			C			C			C	

Intersection Summary			
HCM Average Control Delay	27.1	HCM Level of Service	C
HCM Volume to Capacity ratio	0.72		
Actuated Cycle Length (s)	74.1	Sum of lost time (s)	16.0
Intersection Capacity Utilization	65.9%	ICU Level of Service	C
Analysis Period (min)	15		

c Critical Lane Group

Movement	EBL	EBT	EBR	WBL	WBT	WBR	NBL	NBT	NBR	SBL	SBT	SBR
Lane Configurations												
Volume (vph)	605	1200	220	480	740	364	130	1643	310	463	1564	93
Ideal Flow (vphpl)	1900	1900	1900	1900	1900	1900	1900	1900	1900	1900	1900	1900
Total Lost time (s)	4.0	4.0	4.0	4.0	4.0	4.0	4.0	4.0	4.0	4.0	4.0	4.0
Lane Util. Factor	0.97	0.91	1.00	0.97	0.91	1.00	0.97	0.91	1.00	0.97	0.91	1.00
Frt	1.00	1.00	0.85	1.00	1.00	0.85	1.00	1.00	0.85	1.00	1.00	0.85
Flt Protected	0.95	1.00	1.00	0.95	1.00	1.00	0.95	1.00	1.00	0.95	1.00	1.00
Satd. Flow (prot)	3502	5187	1615	3502	5187	1615	3502	5187	1615	3502	5187	1615
Flt Permitted	0.95	1.00	1.00	0.95	1.00	1.00	0.95	1.00	1.00	0.95	1.00	1.00
Satd. Flow (perm)	3502	5187	1615	3502	5187	1615	3502	5187	1615	3502	5187	1615
Peak-hour factor, PHF	0.96	0.96	0.96	0.96	0.96	0.96	0.96	0.96	0.96	0.96	0.96	0.96
Adj. Flow (vph)	630	1250	229	500	771	379	135	1711	323	482	1629	97
RTOR Reduction (vph)	0	0	0	0	0	0	0	0	86	0	0	29
Lane Group Flow (vph)	630	1250	229	500	771	379	135	1711	237	482	1629	68
Heavy Vehicles (%)	0%	0%	0%	0%	0%	0%	0%	0%	0%	0%	0%	0%
Turn Type	Prot		Free	Prot		Free	Prot		Perm	Prot		Perm
Protected Phases	5	2		1	6		7	4		3	8	
Permitted Phases			Free			Free			4			8
Actuated Green, G (s)	25.0	39.5	150.0	21.0	35.5	150.0	8.8	48.5	48.5	19.0	58.7	58.7
Effective Green, g (s)	26.0	41.5	150.0	22.0	37.5	150.0	9.8	50.5	50.5	20.0	60.7	60.7
Actuated g/C Ratio	0.17	0.28	1.00	0.15	0.25	1.00	0.07	0.34	0.34	0.13	0.40	0.40
Clearance Time (s)	5.0	6.0		5.0	6.0		5.0	6.0	6.0	5.0	6.0	6.0
Vehicle Extension (s)	3.0	3.0		3.0	3.0		3.0	3.0	3.0	3.0	3.0	3.0
Lane Grp Cap (vph)	607	1435	1615	514	1297	1615	229	1746	544	467	2099	654
v/s Ratio Prot	c0.18	c0.24		0.14	0.15		0.04	c0.33		c0.14	0.31	
v/s Ratio Perm			0.14			0.23			0.15			0.04
v/c Ratio	1.04	0.87	0.14	0.97	0.59	0.23	0.59	0.98	0.44	1.03	0.78	0.10
Uniform Delay, d1	62.0	51.7	0.0	63.7	49.6	0.0	68.1	49.2	38.7	65.0	38.8	27.8
Progression Factor	1.00	1.00	1.00	1.00	1.00	1.00	1.00	1.00	1.00	1.00	1.00	1.00
Incremental Delay, d2	46.7	6.1	0.2	32.6	0.7	0.3	3.8	17.3	2.5	50.2	2.9	0.3
Delay (s)	108.7	57.8	0.2	96.3	50.3	0.3	72.0	66.5	41.2	115.2	41.6	28.1
Level of Service	F	E	A	F	D	A	E	E	D	F	D	C
Approach Delay (s)		66.7			52.7			63.1			57.1	
Approach LOS		E			D			E			E	

Intersection Summary			
HCM Average Control Delay	60.3	HCM Level of Service	E
HCM Volume to Capacity ratio	0.98		
Actuated Cycle Length (s)	150.0	Sum of lost time (s)	16.0
Intersection Capacity Utilization	95.2%	ICU Level of Service	F
Analysis Period (min)	15		

c Critical Lane Group

Movement	EBL	EBT	EBR	WBL	WBT	WBR	NBL	NBT	NBR	SBL	SBT	SBR
Lane Configurations												
Volume (vph)	369	620	610	190	370	175	590	676	100	211	804	506
Ideal Flow (vphpl)	1900	1900	1900	1900	1900	1900	1900	1900	1900	1900	1900	1900
Total Lost time (s)	4.0	4.0	4.0	4.0	4.0	4.0	4.0	4.0	4.0	4.0	4.0	4.0
Lane Util. Factor	0.97	0.95	1.00	0.97	0.95	1.00	0.97	0.95	1.00	0.97	0.95	1.00
Frt	1.00	1.00	0.85	1.00	1.00	0.85	1.00	1.00	0.85	1.00	1.00	0.85
Flt Protected	0.95	1.00	1.00	0.95	1.00	1.00	0.95	1.00	1.00	0.95	1.00	1.00
Satd. Flow (prot)	3502	3610	1615	3502	3610	1615	3502	3610	1615	3502	3610	1615
Flt Permitted	0.95	1.00	1.00	0.95	1.00	1.00	0.95	1.00	1.00	0.95	1.00	1.00
Satd. Flow (perm)	3502	3610	1615	3502	3610	1615	3502	3610	1615	3502	3610	1615
Peak-hour factor, PHF	0.96	0.96	0.96	0.96	0.96	0.96	0.96	0.96	0.96	0.96	0.96	0.96
Adj. Flow (vph)	384	646	635	198	385	182	615	704	104	220	838	527
RTOR Reduction (vph)	0	0	230	0	0	124	0	0	49	0	0	133
Lane Group Flow (vph)	384	646	405	198	385	58	615	704	55	220	838	394
Heavy Vehicles (%)	0%	0%	0%	0%	0%	0%	0%	0%	0%	0%	0%	0%
Turn Type	Prot		Perm	Prot		Perm	Prot		Perm	Prot		Perm
Protected Phases	5	2		1	6		3	8		7	4	
Permitted Phases			2			6			8			4
Actuated Green, G (s)	15.5	38.4	38.4	10.6	33.5	33.5	15.5	29.7	29.7	11.3	25.5	25.5
Effective Green, g (s)	16.0	39.9	39.9	11.1	35.0	35.0	16.0	31.2	31.2	11.8	27.0	27.0
Actuated g/C Ratio	0.15	0.36	0.36	0.10	0.32	0.32	0.15	0.28	0.28	0.11	0.25	0.25
Clearance Time (s)	4.5	5.5	5.5	4.5	5.5	5.5	4.5	5.5	5.5	4.5	5.5	5.5
Vehicle Extension (s)	2.0	2.5	2.5	2.0	2.5	2.5	2.0	2.0	2.0	2.0	2.0	2.0
Lane Grp Cap (vph)	509	1309	586	353	1149	514	509	1024	458	376	886	396
v/s Ratio Prot	c0.11	0.18		0.06	0.11		c0.18	0.20		0.06	0.23	
v/s Ratio Perm			c0.25			0.04			0.03			c0.24
v/c Ratio	0.75	0.49	0.69	0.56	0.34	0.11	1.21	0.69	0.12	0.59	0.95	1.00
Uniform Delay, d1	45.1	27.2	29.8	47.1	28.6	26.5	47.0	35.1	29.2	46.8	40.8	41.4
Progression Factor	1.00	1.00	1.00	1.00	1.00	1.00	1.00	1.00	1.00	1.00	1.00	1.00
Incremental Delay, d2	5.6	1.3	6.6	1.2	0.8	0.4	111.0	1.5	0.0	1.5	18.1	43.7
Delay (s)	50.7	28.5	36.4	48.3	29.4	27.0	158.0	36.6	29.3	48.3	58.9	85.1
Level of Service	D	C	D	D	C	C	F	D	C	D	E	F
Approach Delay (s)		36.6			33.7			88.5			66.2	
Approach LOS		D			C			F			E	

Intersection Summary			
HCM Average Control Delay	58.4	HCM Level of Service	E
HCM Volume to Capacity ratio	0.86		
Actuated Cycle Length (s)	110.0	Sum of lost time (s)	12.0
Intersection Capacity Utilization	75.4%	ICU Level of Service	D
Analysis Period (min)	15		

c Critical Lane Group

Movement	EBL	EBT	EBR	WBL	WBT	WBR	NBL	NBT	NBR	SBL	SBT	SBR
Lane Configurations												
Volume (vph)	80	596	110	120	358	44	130	159	120	83	144	100
Ideal Flow (vphpl)	1900	1900	1900	1900	1900	1900	1900	1900	1900	1900	1900	1900
Total Lost time (s)	4.0	4.0		4.0	4.0		4.0	4.0		4.0	4.0	4.0
Lane Util. Factor	1.00	0.95		1.00	0.95		1.00	1.00		1.00	1.00	1.00
Frt	1.00	0.98		1.00	0.98		1.00	0.94		1.00	1.00	0.85
Flt Protected	0.95	1.00		0.95	1.00		0.95	1.00		0.95	1.00	1.00
Satd. Flow (prot)	1787	3490		1805	3551		1787	1760		1770	1863	1583
Flt Permitted	0.95	1.00		0.95	1.00		0.95	1.00		0.95	1.00	1.00
Satd. Flow (perm)	1787	3490		1805	3551		1787	1760		1770	1863	1583
Peak-hour factor, PHF	0.92	0.92	0.92	0.92	0.92	0.92	0.92	0.92	0.92	0.92	0.92	0.92
Adj. Flow (vph)	87	648	120	130	389	48	141	173	130	90	157	109
RTOR Reduction (vph)	0	13	0	0	8	0	0	31	0	0	0	83
Lane Group Flow (vph)	87	755	0	130	429	0	141	272	0	90	157	26
Heavy Vehicles (%)	1%	1%	1%	0%	0%	0%	1%	1%	1%	2%	2%	2%
Turn Type	Prot			Prot			Prot			Prot		Perm
Protected Phases	1	6		5	2		3	8		7	4	
Permitted Phases												4
Actuated Green, G (s)	7.5	40.9		9.6	43.0		11.9	20.3		8.2	16.6	16.6
Effective Green, g (s)	7.5	41.4		9.6	43.5		11.9	20.8		8.2	17.1	17.1
Actuated g/C Ratio	0.08	0.43		0.10	0.45		0.12	0.22		0.09	0.18	0.18
Clearance Time (s)	4.0	4.5		4.0	4.5		4.0	4.5		4.0	4.5	4.5
Vehicle Extension (s)	2.0	5.0		2.0	3.0		2.0	2.0		2.0	2.0	2.0
Lane Grp Cap (vph)	140	1505		181	1609		222	381		151	332	282
v/s Ratio Prot	0.05	c0.22		c0.07	0.12		c0.08	c0.15		0.05	0.08	
v/s Ratio Perm												0.02
v/c Ratio	0.62	0.50		0.72	0.27		0.64	0.72		0.60	0.47	0.09
Uniform Delay, d1	42.9	19.8		41.9	16.3		40.0	34.9		42.3	35.4	33.0
Progression Factor	1.00	1.00		1.00	1.00		1.00	1.00		1.00	1.00	1.00
Incremental Delay, d2	6.0	1.2		10.7	0.4		4.3	5.2		4.2	0.4	0.1
Delay (s)	48.9	21.0		52.6	16.7		44.3	40.1		46.5	35.8	33.0
Level of Service	D	C		D	B		D	D		D	D	C
Approach Delay (s)		23.9			25.0			41.4			37.6	
Approach LOS		C			C			D			D	

Intersection Summary			
HCM Average Control Delay	29.9	HCM Level of Service	C
HCM Volume to Capacity ratio	0.60		
Actuated Cycle Length (s)	96.0	Sum of lost time (s)	16.0
Intersection Capacity Utilization	60.3%	ICU Level of Service	B
Analysis Period (min)	15		

c Critical Lane Group

Movement	EBL	EBR	NBL	NBT	SBT	SBR
Lane Configurations						
Volume (veh/h)	0	184	248	220	120	0
Sign Control	Stop			Free	Free	
Grade	0%			0%	0%	
Peak Hour Factor	0.92	0.92	0.92	0.92	0.92	0.92
Hourly flow rate (vph)	0	200	270	239	130	0
Pedestrians						
Lane Width (ft)						
Walking Speed (ft/s)						
Percent Blockage						
Right turn flare (veh)						
Median type				None	None	
Median storage veh)						
Upstream signal (ft)						
pX, platoon unblocked						
vC, conflicting volume	909	130	130			
vC1, stage 1 conf vol						
vC2, stage 2 conf vol						
vCu, unblocked vol	909	130	130			
tC, single (s)	6.4	6.2	4.1			
tC, 2 stage (s)						
tF (s)	3.5	3.3	2.2			
p0 queue free %	100	78	81			
cM capacity (veh/h)	249	919	1455			

Direction, Lane #	EB 1	NB 1	NB 2	SB 1	SB 2
Volume Total	200	270	239	130	0
Volume Left	0	270	0	0	0
Volume Right	200	0	0	0	0
cSH	919	1455	1700	1700	1700
Volume to Capacity	0.22	0.19	0.14	0.08	0.00
Queue Length 95th (ft)	21	17	0	0	0
Control Delay (s)	10.0	8.0	0.0	0.0	0.0
Lane LOS	B	A			
Approach Delay (s)	10.0	4.3		0.0	
Approach LOS	B				

Intersection Summary			
Average Delay	5.0		
Intersection Capacity Utilization	38.5%	ICU Level of Service	A
Analysis Period (min)	15		

Movement	WBL	WBR	NBT	NBR	SBL	SBT
Lane Configurations						
Volume (veh/h)	69	0	160	93	0	60
Sign Control	Stop		Free			Free
Grade	0%		0%			0%
Peak Hour Factor	0.92	0.92	0.92	0.92	0.92	0.92
Hourly flow rate (vph)	75	0	174	101	0	65
Pedestrians						
Lane Width (ft)						
Walking Speed (ft/s)						
Percent Blockage						
Right turn flare (veh)						
Median type			None			None
Median storage veh)						
Upstream signal (ft)						
pX, platoon unblocked						
vC, conflicting volume	290	224			275	
vC1, stage 1 conf vol						
vC2, stage 2 conf vol						
vCu, unblocked vol	290	224			275	
tC, single (s)	6.4	6.2			4.1	
tC, 2 stage (s)						
tF (s)	3.5	3.3			2.2	
p0 queue free %	89	100			100	
cM capacity (veh/h)	701	815			1288	

Direction, Lane #	WB 1	NB 1	SB 1
Volume Total	75	275	65
Volume Left	75	0	0
Volume Right	0	101	0
cSH	701	1700	1288
Volume to Capacity	0.11	0.16	0.00
Queue Length 95th (ft)	9	0	0
Control Delay (s)	10.8	0.0	0.0
Lane LOS	B		
Approach Delay (s)	10.8	0.0	0.0
Approach LOS	B		

Intersection Summary			
Average Delay	1.9		
Intersection Capacity Utilization	24.6%	ICU Level of Service	A
Analysis Period (min)	15		

Movement	EBL	EBT	EBR	WBL	WBT	WBR	NBL	NBT	NBR	SBL	SBT	SBR
Lane Configurations												
Volume (veh/h)	30	1020	700	210	390	470	660	237	410	142	138	10
Sign Control		Stop			Stop			Free			Free	
Grade		0%			0%			0%			0%	
Peak Hour Factor	0.92	0.92	0.92	0.92	0.92	0.92	0.92	0.92	0.92	0.92	0.92	0.92
Hourly flow rate (vph)	33	1109	761	228	424	511	717	258	446	154	150	11
Pedestrians												
Lane Width (ft)												
Walking Speed (ft/s)												
Percent Blockage												
Right turn flare (veh)												
Median type								None			None	
Median storage veh)												
Upstream signal (ft)												
pX, platoon unblocked												
vC, conflicting volume	3102	2602	155	3695	2385	480	161			703		
vC1, stage 1 conf vol												
vC2, stage 2 conf vol												
vCu, unblocked vol	3102	2602	155	3695	2385	480	161			703		
tC, single (s)	7.1	6.5	6.2	7.1	6.5	6.2	4.1			4.1		
tC, 2 stage (s)												
tF (s)	3.5	4.0	3.3	3.5	4.0	3.3	2.2			2.2		
p0 queue free %	0	0	15	0	0	13	49			83		
cM capacity (veh/h)	0	10	896	0	14	590	1418			894		

Direction, Lane #	EB 1	WB 1	NB 1	SB 1
Volume Total	1902	1163	1421	315
Volume Left	33	228	717	154
Volume Right	761	511	446	11
cSH	0	0	1418	894
Volume to Capacity	Err	Err	0.51	0.17
Queue Length 95th (ft)	Err	Err	74	16
Control Delay (s)	Err	Err	9.4	5.8
Lane LOS	F	F	A	A
Approach Delay (s)	Err	Err	9.4	5.8
Approach LOS	F	F		

Intersection Summary			
Average Delay	Err		
Intersection Capacity Utilization	262.1%	ICU Level of Service	H
Analysis Period (min)	15		

Movement	EBL	EBR	NBL	NBT	SBT	SBR
Lane Configurations						
Volume (vph)	250	560	440	1167	1278	110
Ideal Flow (vphpl)	1900	1900	1900	1900	1900	1900
Total Lost time (s)	4.0	4.0	4.0	4.0	4.0	
Lane Util. Factor	1.00	1.00	1.00	0.95	0.95	
Frt	1.00	0.85	1.00	1.00	0.99	
Flt Protected	0.95	1.00	0.95	1.00	1.00	
Satd. Flow (prot)	1787	1599	1805	3610	3532	
Flt Permitted	0.95	1.00	0.95	1.00	1.00	
Satd. Flow (perm)	1787	1599	1805	3610	3532	
Peak-hour factor, PHF	0.98	0.98	0.98	0.98	0.98	0.98
Adj. Flow (vph)	255	571	449	1191	1304	112
RTOR Reduction (vph)	0	364	0	0	8	0
Lane Group Flow (vph)	255	207	449	1191	1408	0
Heavy Vehicles (%)	1%	1%	0%	0%	1%	1%
Turn Type		Perm	Prot			
Protected Phases	2		3	8	4	
Permitted Phases		2				
Actuated Green, G (s)	14.1	14.1	20.2	55.3	30.6	
Effective Green, g (s)	14.1	14.1	20.7	55.8	31.1	
Actuated g/C Ratio	0.18	0.18	0.27	0.72	0.40	
Clearance Time (s)	4.0	4.0	4.5	4.5	4.5	
Vehicle Extension (s)	2.0	2.0	2.0	2.5	2.5	
Lane Grp Cap (vph)	323	289	480	2586	1410	
v/s Ratio Prot	c0.14		c0.25	0.33	c0.40	
v/s Ratio Perm		0.13				
v/c Ratio	0.79	0.71	0.94	0.46	1.00	
Uniform Delay, d1	30.5	30.0	27.9	4.7	23.4	
Progression Factor	1.00	1.00	1.00	1.00	1.00	
Incremental Delay, d2	11.2	6.8	25.4	0.1	23.5	
Delay (s)	41.7	36.8	53.3	4.8	46.9	
Level of Service	D	D	D	A	D	
Approach Delay (s)	38.3			18.1	46.9	
Approach LOS	D			B	D	

Intersection Summary			
HCM Average Control Delay	32.9	HCM Level of Service	C
HCM Volume to Capacity ratio	0.93		
Actuated Cycle Length (s)	77.9	Sum of lost time (s)	12.0
Intersection Capacity Utilization	87.1%	ICU Level of Service	E
Analysis Period (min)	15		

c Critical Lane Group

Movement	EBL	EBT	EBR	WBL	WBT	WBR	NBL	NBT	NBR	SBL	SBT	SBR
Lane Configurations												
Volume (vph)	104	830	1000	180	630	148	520	1031	240	314	1037	142
Ideal Flow (vphpl)	1900	1900	1900	1900	1900	1900	1900	1900	1900	1900	1900	1900
Total Lost time (s)	4.0	4.0	4.0	4.0	4.0	4.0	4.0	4.0	4.0	4.0	4.0	4.0
Lane Util. Factor	0.97	0.91	1.00	0.97	0.91	1.00	0.97	0.91	1.00	0.97	0.91	1.00
Frt	1.00	1.00	0.85	1.00	1.00	0.85	1.00	1.00	0.85	1.00	1.00	0.85
Flt Protected	0.95	1.00	1.00	0.95	1.00	1.00	0.95	1.00	1.00	0.95	1.00	1.00
Satd. Flow (prot)	3502	5187	1615	3502	5187	1615	3502	5187	1615	3467	5136	1599
Flt Permitted	0.95	1.00	1.00	0.95	1.00	1.00	0.95	1.00	1.00	0.95	1.00	1.00
Satd. Flow (perm)	3502	5187	1615	3502	5187	1615	3502	5187	1615	3467	5136	1599
Peak-hour factor, PHF	0.97	0.97	0.97	0.97	0.97	0.97	0.97	0.97	0.97	0.97	0.97	0.97
Adj. Flow (vph)	107	856	1031	186	649	153	536	1063	247	324	1069	146
RTOR Reduction (vph)	0	0	0	0	0	108	0	0	110	0	0	98
Lane Group Flow (vph)	107	856	1031	186	649	45	536	1063	137	324	1069	48
Heavy Vehicles (%)	0%	0%	0%	0%	0%	0%	0%	0%	0%	1%	1%	1%
Turn Type	Prot		Free	Prot		Perm	Prot		Perm	Prot		Perm
Protected Phases	7	4		3	8		5	2		1	6	
Permitted Phases			Free			8			2			6
Actuated Green, G (s)	4.6	22.5	87.2	6.1	24.0	24.0	9.6	25.6	25.6	11.0	27.0	27.0
Effective Green, g (s)	6.1	24.0	87.2	7.6	25.5	25.5	11.1	27.1	27.1	12.5	28.5	28.5
Actuated g/C Ratio	0.07	0.28	1.00	0.09	0.29	0.29	0.13	0.31	0.31	0.14	0.33	0.33
Clearance Time (s)	5.5	5.5		5.5	5.5	5.5	5.5	5.5	5.5	5.5	5.5	5.5
Vehicle Extension (s)	2.0	3.0		2.0	3.0	3.0	2.0	3.0	3.0	2.0	3.0	3.0
Lane Grp Cap (vph)	245	1428	1615	305	1517	472	446	1612	502	497	1679	523
v/s Ratio Prot	0.03	0.17		0.05	0.13		c0.15	0.20		0.09	0.21	
v/s Ratio Perm			c0.64			0.03			0.09			0.03
v/c Ratio	0.44	0.60	0.64	0.61	0.43	0.09	1.20	0.66	0.27	0.65	0.64	0.09
Uniform Delay, d1	38.9	27.4	0.0	38.4	24.9	22.5	38.1	26.0	22.6	35.3	24.9	20.4
Progression Factor	1.00	1.00	1.00	1.00	1.00	1.00	1.00	1.00	1.00	1.00	1.00	1.00
Incremental Delay, d2	0.5	0.7	1.9	2.4	0.2	0.1	110.6	1.0	0.3	2.3	0.8	0.1
Delay (s)	39.4	28.1	1.9	40.7	25.1	22.5	148.6	27.0	22.9	37.6	25.7	20.4
Level of Service	D	C	A	D	C	C	F	C	C	D	C	C
Approach Delay (s)		15.2			27.7			61.8			27.7	
Approach LOS		B			C			E			C	

Intersection Summary			
HCM Average Control Delay	33.7	HCM Level of Service	C
HCM Volume to Capacity ratio	0.71		
Actuated Cycle Length (s)	87.2	Sum of lost time (s)	4.0
Intersection Capacity Utilization	69.4%	ICU Level of Service	C
Analysis Period (min)	15		

c Critical Lane Group

Level Of Service Computation Report
2000 HCM 4-Way Stop Method (Future Volume Alternative)

****

Intersection #4 Larch Rd/Tracy Blvd

****

Cycle (sec): 100 Critical Vol./Cap.(X): 4.211
Loss Time (sec): 0 (Y+R=4.0 sec) Average Delay (sec/veh): 986.1
Optimal Cycle: 0 Level Of Service: F

****

Street Name:	Tracy Blvd						Larch Rd					
Approach:	North Bound			South Bound			East Bound			West Bound		
Movement:	L - T - R			L - T - R			L - T - R			L - T - R		
Control:	Stop Sign			Stop Sign			Stop Sign			Stop Sign		
Rights:	Include			Include			Include			Include		
Min. Green:	0	0	0	0	0	0	0	0	0	0	0	0
Lanes:	1 0 1	0 1		1 0 0	1 0		0 0 1!	0 0		0 1	0 0 1	
Volume Module:												
Base Vol:	630	330	100	10	110	10	10	600	850	160	120	20
Growth Adj:	1.00	1.00	1.00	1.00	1.00	1.00	1.00	1.00	1.00	1.00	1.00	1.00
Initial Bse:	630	330	100	10	110	10	10	600	850	160	120	20
Added Vol:	310	923	0	52	420	0	0	0	122	0	0	93
PasserByVol:	0	0	0	0	0	0	0	0	0	0	0	0
Initial Fut:	940	1253	100	62	530	10	10	600	972	160	120	113
User Adj:	1.00	1.00	1.00	1.00	1.00	1.00	1.00	1.00	1.00	1.00	1.00	1.00
PHF Adj:	0.95	0.95	0.95	0.95	0.95	0.95	0.95	0.95	0.95	0.95	0.95	0.95
PHF Volume:	989	1319	105	65	558	11	11	632	1023	168	126	119
Reduct Vol:	0	0	0	0	0	0	0	0	0	0	0	0
Reduced Vol:	989	1319	105	65	558	11	11	632	1023	168	126	119
PCE Adj:	1.00	1.00	1.00	1.00	1.00	1.00	1.00	1.00	1.00	1.00	1.00	1.00
MLF Adj:	1.00	1.00	1.00	1.00	1.00	1.00	1.00	1.00	1.00	1.00	1.00	1.00
FinalVolume:	989	1319	105	65	558	11	11	632	1023	168	126	119
Saturation Flow Module:												
Adjustment:	1.00	1.00	1.00	1.00	1.00	1.00	1.00	1.00	1.00	1.00	1.00	1.00
Lanes:	1.00	1.00	1.00	1.00	0.98	0.02	0.01	0.38	0.61	0.57	0.43	1.00
Final Sat.:	346	364	389	355	371	7	2	150	243	209	157	405
Capacity Analysis Module:												
Vol/Sat:	2.86	3.63	0.27	0.18	1.51	1.51	4.21	4.21	4.21	0.81	0.81	0.29
Crit Moves:	****					****		****		****		
Delay/Veh:	863.3	1206	15.2	15.0	265	265.3	1467	1467	1467	42.9	42.9	15.2
Delay Adj:	1.00	1.00	1.00	1.00	1.00	1.00	1.00	1.00	1.00	1.00	1.00	1.00
AdjDel/Veh:	863.3	1206	15.2	15.0	265	265.3	1467	1467	1467	42.9	42.9	15.2
LOS by Move:	F	F	C	B	F	F	F	F	F	E	E	C
ApproachDel:	1013.5			239.5			1466.8			34.9		
Delay Adj:	1.00			1.00			1.00			1.00		
ApprAdjDel:	1013.5			239.5			1466.8			34.9		
LOS by Appr:	F			F			F			D		
AllWayAvgQ:	81.7	121	0.4	0.2	26.5	26.5	160	160	159.8	3.1	3.1	0.4

****

Note: Queue reported is the number of cars per lane.

****

Movement	EBL	EBT	EBR	WBL	WBT	WBR	NBL	NBT	NBR	SBL	SBT	SBR
Lane Configurations												
Volume (vph)	0	0	0	430	0	1376	440	1017	0	0	1559	233
Ideal Flow (vphpl)	1900	1900	1900	1900	1900	1900	1900	1900	1900	1900	1900	1900
Total Lost time (s)					4.0	4.0	4.0	4.0			4.0	
Lane Util. Factor					1.00	1.00	1.00	0.95			0.95	
Frt					1.00	0.85	1.00	1.00			0.98	
Flt Protected					0.95	1.00	0.95	1.00			1.00	
Satd. Flow (prot)					1787	1599	1787	3574			3505	
Flt Permitted					0.95	1.00	0.95	1.00			1.00	
Satd. Flow (perm)					1787	1599	1787	3574			3505	
Peak-hour factor, PHF	0.95	0.95	0.95	0.95	0.95	0.95	0.95	0.95	0.95	0.95	0.95	0.95
Adj. Flow (vph)	0	0	0	453	0	1448	463	1071	0	0	1641	245
RTOR Reduction (vph)	0	0	0	0	0	69	0	0	0	0	11	0
Lane Group Flow (vph)	0	0	0	0	453	1379	463	1071	0	0	1875	0
Heavy Vehicles (%)	0%	0%	0%	1%	1%	1%	1%	1%	1%	1%	1%	1%
Turn Type				Perm		Perm	Prot					
Protected Phases					8		5	2			6	
Permitted Phases				8		8						
Actuated Green, G (s)					36.0	36.0	21.0	65.1			40.1	
Effective Green, g (s)					36.0	36.0	21.0	66.0			41.0	
Actuated g/C Ratio					0.33	0.33	0.19	0.60			0.37	
Clearance Time (s)					4.0	4.0	4.0	4.9			4.9	
Vehicle Extension (s)					3.0	3.0	3.0	3.0			3.0	
Lane Grp Cap (vph)					585	523	341	2144			1306	
v/s Ratio Prot							c0.26	0.30			c0.54	
v/s Ratio Perm					0.25	c0.86						
v/c Ratio					0.77	2.64	1.36	0.50			1.44	
Uniform Delay, d1					33.3	37.0	44.5	12.6			34.5	
Progression Factor					1.00	1.00	1.00	1.00			1.00	
Incremental Delay, d2					6.3	742.4	179.0	0.2			200.6	
Delay (s)					39.7	779.4	223.5	12.8			235.1	
Level of Service					D	F	F	B			F	
Approach Delay (s)		0.0			603.1			76.4			235.1	
Approach LOS		A			F			E			F	

Intersection Summary			
HCM Average Control Delay	320.8	HCM Level of Service	F
HCM Volume to Capacity ratio	1.86		
Actuated Cycle Length (s)	110.0	Sum of lost time (s)	12.0
Intersection Capacity Utilization	133.2%	ICU Level of Service	H
Analysis Period (min)	15		

c Critical Lane Group

Movement	EBL	EBT	EBR	WBL	WBT	WBR	NBL	NBT	NBR	SBL	SBT	SBR
Lane Configurations												
Volume (vph)	349	0	540	0	0	0	0	1107	480	1045	944	0
Ideal Flow (vphpl)	1900	1900	1900	1900	1900	1900	1900	1900	1900	1900	1900	1900
Total Lost time (s)		4.0	4.0					4.0		4.0	4.0	
Lane Util. Factor		1.00	1.00					0.95		1.00	0.95	
Frt		1.00	0.85					0.95		1.00	1.00	
Flt Protected		0.95	1.00					1.00		0.95	1.00	
Satd. Flow (prot)		1787	1599					3412		1787	3574	
Flt Permitted		0.95	1.00					1.00		0.95	1.00	
Satd. Flow (perm)		1787	1599					3412		1787	3574	
Peak-hour factor, PHF	0.92	0.92	0.92	0.92	0.92	0.92	0.92	0.92	0.92	0.92	0.92	0.92
Adj. Flow (vph)	379	0	587	0	0	0	0	1203	522	1136	1026	0
RTOR Reduction (vph)	0	0	90	0	0	0	0	46	0	0	0	0
Lane Group Flow (vph)	0	379	497	0	0	0	0	1679	0	1136	1026	0
Heavy Vehicles (%)	1%	1%	1%	0%	0%	0%	1%	1%	1%	1%	1%	1%
Turn Type	Perm		Perm							Prot		
Protected Phases		4						2		1	6	
Permitted Phases	4		4									
Actuated Green, G (s)		30.1	30.1					40.1		21.0	65.1	
Effective Green, g (s)		31.0	31.0					41.0		21.0	66.0	
Actuated g/C Ratio		0.30	0.30					0.39		0.20	0.63	
Clearance Time (s)		4.9	4.9					4.9		4.0	4.9	
Vehicle Extension (s)		3.0	3.0					3.0		3.0	3.0	
Lane Grp Cap (vph)		528	472					1332		357	2247	
v/s Ratio Prot								c0.49		c0.64	0.29	
v/s Ratio Perm		0.21	c0.31									
v/c Ratio		0.72	1.05					1.26		3.18	0.46	
Uniform Delay, d1		33.1	37.0					32.0		42.0	10.2	
Progression Factor		1.00	1.00					1.00		1.00	1.00	
Incremental Delay, d2		4.6	56.4					123.3		989.2	0.1	
Delay (s)		37.7	93.4					155.3		1031.2	10.3	
Level of Service		D	F					F		F	B	
Approach Delay (s)		71.5			0.0			155.3			546.7	
Approach LOS		E			A			F			F	

Intersection Summary			
HCM Average Control Delay	313.0	HCM Level of Service	F
HCM Volume to Capacity ratio	1.62		
Actuated Cycle Length (s)	105.0	Sum of lost time (s)	12.0
Intersection Capacity Utilization	133.2%	ICU Level of Service	H
Analysis Period (min)	15		

c Critical Lane Group

Movement	EBL	EBT	EBR	WBL	WBT	WBR	NBL	NBT	NBR	SBL	SBT	SBR
Lane Configurations												
Volume (vph)	208	270	410	80	160	184	380	960	50	303	911	114
Ideal Flow (vphpl)	1900	1900	1900	1900	1900	1900	1900	1900	1900	1900	1900	1900
Total Lost time (s)	4.0	4.0		4.0	4.0		4.0	4.0		4.0	4.0	
Lane Util. Factor	1.00	0.95		1.00	0.95		1.00	0.95		1.00	0.95	
Frt	1.00	0.91		1.00	0.92		1.00	0.99		1.00	0.98	
Flt Protected	0.95	1.00		0.95	1.00		0.95	1.00		0.95	1.00	
Satd. Flow (prot)	1805	3283		1787	3287		1787	3548		1787	3514	
Flt Permitted	0.95	1.00		0.95	1.00		0.95	1.00		0.95	1.00	
Satd. Flow (perm)	1805	3283		1787	3287		1787	3548		1787	3514	
Peak-hour factor, PHF	0.97	0.97	0.97	0.97	0.97	0.97	0.97	0.97	0.97	0.97	0.97	0.97
Adj. Flow (vph)	214	278	423	82	165	190	392	990	52	312	939	118
RTOR Reduction (vph)	0	296	0	0	166	0	0	3	0	0	8	0
Lane Group Flow (vph)	214	405	0	82	189	0	392	1039	0	312	1049	0
Heavy Vehicles (%)	0%	0%	0%	1%	1%	1%	1%	1%	1%	1%	1%	1%
Turn Type	Prot			Prot			Prot			Prot		
Protected Phases	5	2		1	6		3	8		7	4	
Permitted Phases												
Actuated Green, G (s)	14.3	18.6		7.0	11.3		19.0	33.9		18.0	32.9	
Effective Green, g (s)	14.8	19.6		7.5	12.3		19.5	34.4		18.5	33.4	
Actuated g/C Ratio	0.15	0.20		0.08	0.13		0.20	0.36		0.19	0.35	
Clearance Time (s)	4.5	5.0		4.5	5.0		4.5	4.5		4.5	4.5	
Vehicle Extension (s)	1.0	3.0		1.0	3.0		1.0	3.0		1.0	3.0	
Lane Grp Cap (vph)	278	670		140	421		363	1271		344	1223	
v/s Ratio Prot	c0.12	c0.12		0.05	0.06		c0.22	0.29		0.17	c0.30	
v/s Ratio Perm												
v/c Ratio	0.77	0.60		0.59	0.45		1.08	0.82		0.91	0.86	
Uniform Delay, d1	39.0	34.7		42.7	38.7		38.2	27.9		37.9	29.1	
Progression Factor	1.00	1.00		1.00	1.00		1.00	1.00		1.00	1.00	
Incremental Delay, d2	11.0	1.5		4.0	0.8		70.3	5.9		25.9	7.9	
Delay (s)	49.9	36.2		46.7	39.5		108.5	33.9		63.8	37.0	
Level of Service	D	D		D	D		F	C		E	D	
Approach Delay (s)		39.4			40.8			54.3			43.1	
Approach LOS		D			D			D			D	

Intersection Summary			
HCM Average Control Delay	45.9	HCM Level of Service	D
HCM Volume to Capacity ratio	0.83		
Actuated Cycle Length (s)	96.0	Sum of lost time (s)	12.0
Intersection Capacity Utilization	88.3%	ICU Level of Service	E
Analysis Period (min)	15		

c Critical Lane Group

Movement	EBL	EBT	EBR	WBL	WBT	WBR	NBL	NBT	NBR	SBL	SBT	SBR
Lane Configurations												
Volume (veh/h)	370	10	362	10	10	10	203	40	10	10	40	20
Sign Control		Stop			Stop			Free			Free	
Grade		0%			0%			0%			0%	
Peak Hour Factor	0.94	0.94	0.94	0.94	0.94	0.94	0.94	0.94	0.94	0.94	0.94	0.94
Hourly flow rate (vph)	394	11	385	11	11	11	216	43	11	11	43	21
Pedestrians												
Lane Width (ft)												
Walking Speed (ft/s)												
Percent Blockage												
Right turn flare (veh)												
Median type								None			None	
Median storage veh)												
Upstream signal (ft)												
pX, platoon unblocked												
vC, conflicting volume	570	560	53	945	565	48	64			53		
vC1, stage 1 conf vol												
vC2, stage 2 conf vol												
vCu, unblocked vol	570	560	53	945	565	48	64			53		
tC, single (s)	7.1	6.5	6.2	7.1	6.5	6.2	4.1			4.1		
tC, 2 stage (s)												
tF (s)	3.5	4.0	3.3	3.5	4.0	3.3	2.2			2.2		
p0 queue free %	0	97	62	92	97	99	86			99		
cM capacity (veh/h)	373	374	1017	132	373	1027	1532			1559		

Direction, Lane #	EB 1	EB 2	WB 1	NB 1	SB 1
Volume Total	394	396	32	269	74
Volume Left	394	0	11	216	11
Volume Right	0	385	11	11	21
cSH	373	972	267	1532	1559
Volume to Capacity	1.06	0.41	0.12	0.14	0.01
Queue Length 95th (ft)	338	50	10	12	1
Control Delay (s)	96.2	11.2	20.3	6.4	1.1
Lane LOS	F	B	C	A	A
Approach Delay (s)	53.6		20.3	6.4	1.1
Approach LOS	F		C		

Intersection Summary			
Average Delay	38.4		
Intersection Capacity Utilization	54.5%	ICU Level of Service	A
Analysis Period (min)	15		

Movement	EBL	EBT	EBR	WBL	WBT	WBR	NBL	NBT	NBR	SBL	SBT	SBR
Lane Configurations												
Volume (vph)	60	410	70	40	127	50	80	301	30	230	330	70
Ideal Flow (vphpl)	1900	1900	1900	1900	1900	1900	1900	1900	1900	1900	1900	1900
Total Lost time (s)	4.0	4.0		4.0	4.0		4.0	4.0	4.0	4.0	4.0	4.0
Lane Util. Factor	1.00	0.95		1.00	0.95		1.00	1.00	1.00	1.00	1.00	1.00
Frt	1.00	0.98		1.00	0.96		1.00	1.00	0.85	1.00	1.00	0.85
Flt Protected	0.95	1.00		0.95	1.00		0.95	1.00	1.00	0.95	1.00	1.00
Satd. Flow (prot)	1805	3531		1805	3458		1805	1900	1615	1805	1900	1615
Flt Permitted	0.95	1.00		0.95	1.00		0.95	1.00	1.00	0.95	1.00	1.00
Satd. Flow (perm)	1805	3531		1805	3458		1805	1900	1615	1805	1900	1615
Peak-hour factor, PHF	0.92	0.92	0.92	0.92	0.92	0.92	0.92	0.92	0.92	0.92	0.92	0.92
Adj. Flow (vph)	65	446	76	43	138	54	87	327	33	250	359	76
RTOR Reduction (vph)	0	15	0	0	41	0	0	0	15	0	0	22
Lane Group Flow (vph)	65	507	0	43	151	0	87	327	18	250	359	54
Heavy Vehicles (%)	0%	0%	0%	0%	0%	0%	0%	0%	0%	0%	0%	0%
Turn Type	Prot			Prot			Prot		Perm	Prot		Perm
Protected Phases	1	6		5	2		3	8		7	4	
Permitted Phases									8			4
Actuated Green, G (s)	3.8	16.0		3.4	15.6		6.0	17.3	17.3	12.9	24.2	24.2
Effective Green, g (s)	4.3	16.5		3.9	16.1		6.5	17.8	17.8	13.4	24.7	24.7
Actuated g/C Ratio	0.06	0.24		0.06	0.24		0.10	0.26	0.26	0.20	0.37	0.37
Clearance Time (s)	4.5	4.5		4.5	4.5		4.5	4.5	4.5	4.5	4.5	4.5
Vehicle Extension (s)	1.0	3.0		1.0	3.0		1.0	2.0	2.0	1.0	2.0	2.0
Lane Grp Cap (vph)	115	862		104	824		174	500	425	358	694	590
v/s Ratio Prot	c0.04	c0.14		0.02	0.04		0.05	c0.17		c0.14	0.19	
v/s Ratio Perm									0.01			0.03
v/c Ratio	0.57	0.59		0.41	0.18		0.50	0.65	0.04	0.70	0.52	0.09
Uniform Delay, d1	30.7	22.6		30.7	20.5		29.0	22.2	18.6	25.2	16.8	14.1
Progression Factor	1.00	1.00		1.00	1.00		1.00	1.00	1.00	1.00	1.00	1.00
Incremental Delay, d2	3.8	1.0		1.0	0.1		0.8	2.3	0.0	4.7	0.3	0.0
Delay (s)	34.5	23.6		31.7	20.6		29.8	24.5	18.6	30.0	17.1	14.1
Level of Service	C	C		C	C		C	C	B	C	B	B
Approach Delay (s)		24.8			22.7			25.1			21.4	
Approach LOS		C			C			C			C	

Intersection Summary			
HCM Average Control Delay	23.4	HCM Level of Service	C
HCM Volume to Capacity ratio	0.60		
Actuated Cycle Length (s)	67.6	Sum of lost time (s)	12.0
Intersection Capacity Utilization	60.5%	ICU Level of Service	B
Analysis Period (min)	15		

c Critical Lane Group

Movement	EBL	EBT	EBR	WBL	WBT	WBR	NBL	NBT	NBR	SBL	SBT	SBR
Lane Configurations												
Volume (vph)	529	960	90	430	830	458	450	1844	320	475	1785	155
Ideal Flow (vphpl)	1900	1900	1900	1900	1900	1900	1900	1900	1900	1900	1900	1900
Total Lost time (s)	4.0	4.0	4.0	4.0	4.0	4.0	4.0	4.0	4.0	4.0	4.0	4.0
Lane Util. Factor	0.97	0.91	1.00	0.97	0.91	1.00	0.97	0.91	1.00	0.97	0.91	1.00
Frt	1.00	1.00	0.85	1.00	1.00	0.85	1.00	1.00	0.85	1.00	1.00	0.85
Flt Protected	0.95	1.00	1.00	0.95	1.00	1.00	0.95	1.00	1.00	0.95	1.00	1.00
Satd. Flow (prot)	3502	5187	1615	3502	5187	1615	3502	5187	1615	3502	5187	1615
Flt Permitted	0.95	1.00	1.00	0.95	1.00	1.00	0.95	1.00	1.00	0.95	1.00	1.00
Satd. Flow (perm)	3502	5187	1615	3502	5187	1615	3502	5187	1615	3502	5187	1615
Peak-hour factor, PHF	0.97	0.97	0.97	0.97	0.97	0.97	0.97	0.97	0.97	0.97	0.97	0.97
Adj. Flow (vph)	545	990	93	443	856	472	464	1901	330	490	1840	160
RTOR Reduction (vph)	0	0	0	0	0	0	0	0	78	0	0	41
Lane Group Flow (vph)	545	990	93	443	856	472	464	1901	252	490	1840	119
Heavy Vehicles (%)	0%	0%	0%	0%	0%	0%	0%	0%	0%	0%	0%	0%
Turn Type	Prot		Free	Prot		Free	Prot		Perm	Prot		Perm
Protected Phases	5	2		1	6		7	4		3	8	
Permitted Phases			Free			Free			4			8
Actuated Green, G (s)	22.0	33.9	145.4	20.4	32.3	145.4	18.0	50.1	50.1	19.0	51.1	51.1
Effective Green, g (s)	23.0	35.9	145.4	21.4	34.3	145.4	19.0	52.1	52.1	20.0	53.1	53.1
Actuated g/C Ratio	0.16	0.25	1.00	0.15	0.24	1.00	0.13	0.36	0.36	0.14	0.37	0.37
Clearance Time (s)	5.0	6.0		5.0	6.0		5.0	6.0	6.0	5.0	6.0	6.0
Vehicle Extension (s)	3.0	3.0		3.0	3.0		3.0	3.0	3.0	3.0	3.0	3.0
Lane Grp Cap (vph)	554	1281	1615	515	1224	1615	458	1859	579	482	1894	590
v/s Ratio Prot	c0.16	c0.19		0.13	0.17		0.13	c0.37		c0.14	0.35	
v/s Ratio Perm			0.06			c0.29			0.16			0.07
v/c Ratio	0.98	0.77	0.06	0.86	0.70	0.29	1.01	1.02	0.43	1.02	0.97	0.20
Uniform Delay, d1	61.0	51.0	0.0	60.5	50.8	0.0	63.2	46.7	35.5	62.7	45.4	31.6
Progression Factor	1.00	1.00	1.00	1.00	1.00	1.00	1.00	1.00	1.00	1.00	1.00	1.00
Incremental Delay, d2	33.8	3.0	0.1	13.7	1.8	0.5	45.4	26.8	0.5	45.2	14.5	0.2
Delay (s)	94.9	53.9	0.1	74.2	52.6	0.5	108.6	73.4	36.0	107.9	59.9	31.8
Level of Service	F	D	A	E	D	A	F	E	D	F	E	C
Approach Delay (s)		64.5			44.1			74.9			67.5	
Approach LOS		E			D			E			E	

Intersection Summary			
HCM Average Control Delay	64.5	HCM Level of Service	E
HCM Volume to Capacity ratio	0.93		
Actuated Cycle Length (s)	145.4	Sum of lost time (s)	12.0
Intersection Capacity Utilization	93.6%	ICU Level of Service	F
Analysis Period (min)	15		

c Critical Lane Group

Movement	EBL	EBT	EBR	WBL	WBT	WBR	NBL	NBT	NBR	SBL	SBT	SBR
Lane Configurations												
Volume (vph)	357	540	570	60	350	170	610	647	90	127	623	359
Ideal Flow (vphpl)	1900	1900	1900	1900	1900	1900	1900	1900	1900	1900	1900	1900
Total Lost time (s)	4.0	4.0	4.0	4.0	4.0	4.0	4.0	4.0	4.0	4.0	4.0	4.0
Lane Util. Factor	0.97	0.95	1.00	0.97	0.95	1.00	0.97	0.95	1.00	0.97	0.95	1.00
Frt	1.00	1.00	0.85	1.00	1.00	0.85	1.00	1.00	0.85	1.00	1.00	0.85
Flt Protected	0.95	1.00	1.00	0.95	1.00	1.00	0.95	1.00	1.00	0.95	1.00	1.00
Satd. Flow (prot)	3502	3610	1615	3502	3610	1615	3502	3610	1615	3502	3610	1615
Flt Permitted	0.95	1.00	1.00	0.95	1.00	1.00	0.95	1.00	1.00	0.95	1.00	1.00
Satd. Flow (perm)	3502	3610	1615	3502	3610	1615	3502	3610	1615	3502	3610	1615
Peak-hour factor, PHF	0.96	0.96	0.96	0.96	0.96	0.96	0.96	0.96	0.96	0.96	0.96	0.96
Adj. Flow (vph)	372	562	594	62	365	177	635	674	94	132	649	374
RTOR Reduction (vph)	0	0	307	0	0	143	0	0	35	0	0	105
Lane Group Flow (vph)	372	562	287	62	365	34	635	674	59	132	649	269
Heavy Vehicles (%)	0%	0%	0%	0%	0%	0%	0%	0%	0%	0%	0%	0%
Turn Type	Prot		Perm	Prot		Perm	Prot		Perm	Prot		Perm
Protected Phases	5	2		1	6		3	8		7	4	
Permitted Phases			2			6			8			4
Actuated Green, G (s)	14.7	26.3	26.3	5.2	16.8	16.8	20.5	36.1	36.1	8.3	23.9	23.9
Effective Green, g (s)	15.2	27.8	27.8	5.7	18.3	18.3	21.0	37.6	37.6	8.8	25.4	25.4
Actuated g/C Ratio	0.16	0.29	0.29	0.06	0.19	0.19	0.22	0.39	0.39	0.09	0.26	0.26
Clearance Time (s)	4.5	5.5	5.5	4.5	5.5	5.5	4.5	5.5	5.5	4.5	5.5	5.5
Vehicle Extension (s)	2.0	2.5	2.5	2.0	2.5	2.5	2.0	2.0	2.0	2.0	2.0	2.0
Lane Grp Cap (vph)	555	1046	468	208	689	308	767	1415	633	321	956	428
v/s Ratio Prot	c0.11	0.16		0.02	0.10		c0.18	0.19		0.04	c0.18	
v/s Ratio Perm			c0.18			0.02			0.04			0.17
v/c Ratio	0.67	0.54	0.61	0.30	0.53	0.11	0.83	0.48	0.09	0.41	0.68	0.63
Uniform Delay, d1	38.0	28.6	29.4	43.2	34.9	32.1	35.7	21.8	18.4	41.1	31.6	31.1
Progression Factor	1.00	1.00	1.00	1.00	1.00	1.00	1.00	1.00	1.00	1.00	1.00	1.00
Incremental Delay, d2	2.5	0.4	2.0	0.3	0.6	0.1	7.0	0.1	0.0	0.3	1.5	2.1
Delay (s)	40.5	29.1	31.4	43.5	35.5	32.2	42.7	21.9	18.4	41.4	33.1	33.2
Level of Service	D	C	C	D	D	C	D	C	B	D	C	C
Approach Delay (s)		32.8			35.3			31.1			34.1	
Approach LOS		C			D			C			C	

Intersection Summary			
HCM Average Control Delay	32.9	HCM Level of Service	C
HCM Volume to Capacity ratio	0.69		
Actuated Cycle Length (s)	95.9	Sum of lost time (s)	12.0
Intersection Capacity Utilization	67.9%	ICU Level of Service	C
Analysis Period (min)	15		

c Critical Lane Group

Movement	EBL	EBT	EBR	WBL	WBT	WBR	NBL	NBT	NBR	SBL	SBT	SBR
Lane Configurations												
Volume (vph)	60	518	100	90	325	67	100	157	110	94	141	90
Ideal Flow (vphpl)	1900	1900	1900	1900	1900	1900	1900	1900	1900	1900	1900	1900
Total Lost time (s)	4.0	4.0		4.0	4.0		4.0	4.0		4.0	4.0	4.0
Lane Util. Factor	1.00	0.95		1.00	0.95		1.00	1.00		1.00	1.00	1.00
Frt	1.00	0.98		1.00	0.97		1.00	0.94		1.00	1.00	0.85
Flt Protected	0.95	1.00		0.95	1.00		0.95	1.00		0.95	1.00	1.00
Satd. Flow (prot)	1805	3522		1787	3483		1787	1765		1805	1900	1615
Flt Permitted	0.95	1.00		0.95	1.00		0.95	1.00		0.95	1.00	1.00
Satd. Flow (perm)	1805	3522		1787	3483		1787	1765		1805	1900	1615
Peak-hour factor, PHF	0.98	0.98	0.98	0.98	0.98	0.98	0.98	0.98	0.98	0.98	0.98	0.98
Adj. Flow (vph)	61	529	102	92	332	68	102	160	112	96	144	92
RTOR Reduction (vph)	0	15	0	0	15	0	0	22	0	0	0	62
Lane Group Flow (vph)	61	616	0	92	385	0	102	250	0	96	144	30
Heavy Vehicles (%)	0%	0%	0%	1%	1%	1%	1%	1%	1%	0%	0%	0%
Turn Type	Prot			Prot			Prot			Prot		Perm
Protected Phases	1	6		5	2		3	8		7	4	
Permitted Phases												4
Actuated Green, G (s)	4.3	22.5		6.7	24.9		7.0	15.3		6.8	15.1	15.1
Effective Green, g (s)	4.3	23.0		6.7	25.4		7.0	15.8		6.8	15.6	15.6
Actuated g/C Ratio	0.06	0.34		0.10	0.37		0.10	0.23		0.10	0.23	0.23
Clearance Time (s)	4.0	4.5		4.0	4.5		4.0	4.5		4.0	4.5	4.5
Vehicle Extension (s)	2.0	5.0		2.0	3.0		2.0	2.0		2.0	2.0	2.0
Lane Grp Cap (vph)	114	1186		175	1295		183	408		180	434	369
v/s Ratio Prot	0.03	c0.17		c0.05	0.11		c0.06	c0.14		0.05	0.08	
v/s Ratio Perm												0.02
v/c Ratio	0.54	0.52		0.53	0.30		0.56	0.61		0.53	0.33	0.08
Uniform Delay, d1	31.0	18.2		29.3	15.1		29.2	23.5		29.2	22.0	20.7
Progression Factor	1.00	1.00		1.00	1.00		1.00	1.00		1.00	1.00	1.00
Incremental Delay, d2	2.4	0.8		1.3	0.1		2.1	1.9		1.5	0.2	0.0
Delay (s)	33.4	19.0		30.6	15.3		31.3	25.4		30.8	22.2	20.8
Level of Service	C	B		C	B		C	C		C	C	C
Approach Delay (s)		20.3			18.1			27.0			24.3	
Approach LOS		C			B			C			C	

Intersection Summary			
HCM Average Control Delay	21.7	HCM Level of Service	C
HCM Volume to Capacity ratio	0.51		
Actuated Cycle Length (s)	68.3	Sum of lost time (s)	12.0
Intersection Capacity Utilization	56.0%	ICU Level of Service	B
Analysis Period (min)	15		

c Critical Lane Group

Movement	EBL	EBR	NBL	NBT	SBT	SBR
Lane Configurations						
Volume (veh/h)	0	472	1015	360	130	0
Sign Control	Stop			Free	Free	
Grade	0%			0%	0%	
Peak Hour Factor	0.92	0.92	0.92	0.92	0.92	0.92
Hourly flow rate (vph)	0	513	1103	391	141	0
Pedestrians						
Lane Width (ft)						
Walking Speed (ft/s)						
Percent Blockage						
Right turn flare (veh)						
Median type				None	None	
Median storage veh)						
Upstream signal (ft)						
pX, platoon unblocked						
vC, conflicting volume	2739	141	141			
vC1, stage 1 conf vol						
vC2, stage 2 conf vol						
vCu, unblocked vol	2739	141	141			
tC, single (s)	6.4	6.2	4.1			
tC, 2 stage (s)						
tF (s)	3.5	3.3	2.2			
p0 queue free %	100	43	23			
cM capacity (veh/h)	5	907	1442			

Direction, Lane #	EB 1	NB 1	NB 2	SB 1	SB 2
Volume Total	513	1103	391	141	0
Volume Left	0	1103	0	0	0
Volume Right	513	0	0	0	0
cSH	907	1442	1700	1700	1700
Volume to Capacity	0.57	0.77	0.23	0.08	0.00
Queue Length 95th (ft)	91	205	0	0	0
Control Delay (s)	14.0	15.1	0.0	0.0	0.0
Lane LOS	B	C			
Approach Delay (s)	14.0	11.1		0.0	
Approach LOS	B				

Intersection Summary			
Average Delay	11.1		
Intersection Capacity Utilization	102.3%	ICU Level of Service	G
Analysis Period (min)	15		

Movement	WBL	WBR	NBT	NBR	SBL	SBT
Lane Configurations						
Volume (veh/h)	209	0	270	467	0	80
Sign Control	Stop		Free			Free
Grade	0%		0%			0%
Peak Hour Factor	0.92	0.92	0.92	0.92	0.92	0.92
Hourly flow rate (vph)	227	0	293	508	0	87
Pedestrians						
Lane Width (ft)						
Walking Speed (ft/s)						
Percent Blockage						
Right turn flare (veh)						
Median type			None			None
Median storage veh)						
Upstream signal (ft)						
pX, platoon unblocked						
vC, conflicting volume	634	547			801	
vC1, stage 1 conf vol						
vC2, stage 2 conf vol						
vCu, unblocked vol	634	547			801	
tC, single (s)	6.4	6.2			4.1	
tC, 2 stage (s)						
tF (s)	3.5	3.3			2.2	
p0 queue free %	49	100			100	
cM capacity (veh/h)	443	537			822	

Direction, Lane #	WB 1	NB 1	SB 1
Volume Total	227	801	87
Volume Left	227	0	0
Volume Right	0	508	0
cSH	443	1700	822
Volume to Capacity	0.51	0.47	0.00
Queue Length 95th (ft)	71	0	0
Control Delay (s)	21.4	0.0	0.0
Lane LOS	C		
Approach Delay (s)	21.4	0.0	0.0
Approach LOS	C		

Intersection Summary			
Average Delay	4.4		
Intersection Capacity Utilization	61.1%	ICU Level of Service	B
Analysis Period (min)	15		

Movement	EBL	EBT	EBR	WBL	WBT	WBR	NBL	NBT	NBR	SBL	SBT	SBR
Lane Configurations												
Volume (vph)	30	1040	740	180	410	52	690	171	430	19	100	10
Ideal Flow (vphpl)	1900	1900	1900	1900	1900	1900	1900	1900	1900	1900	1900	1900
Total Lost time (s)	4.0	4.0	4.0	4.0	4.0		4.0	4.0	4.0	4.0	4.0	
Lane Util. Factor	1.00	0.95	1.00	1.00	0.95		0.97	1.00	1.00	1.00	1.00	
Frt	1.00	1.00	0.85	1.00	0.98		1.00	1.00	0.85	1.00	0.99	
Flt Protected	0.95	1.00	1.00	0.95	1.00		0.95	1.00	1.00	0.95	1.00	
Satd. Flow (prot)	1805	3610	1615	1805	3549		3433	1863	1583	1770	1837	
Flt Permitted	0.95	1.00	1.00	0.95	1.00		0.95	1.00	1.00	0.95	1.00	
Satd. Flow (perm)	1805	3610	1615	1805	3549		3433	1863	1583	1770	1837	
Peak-hour factor, PHF	0.92	0.92	0.92	0.92	0.92	0.92	0.92	0.92	0.92	0.92	0.92	0.92
Adj. Flow (vph)	33	1130	804	196	446	57	750	186	467	21	109	11
RTOR Reduction (vph)	0	0	364	0	10	0	0	0	156	0	4	0
Lane Group Flow (vph)	33	1130	440	196	493	0	750	186	311	21	116	0
Heavy Vehicles (%)	0%	0%	0%	0%	0%	0%	2%	2%	2%	2%	2%	2%
Turn Type	Prot		Perm	Prot			Prot		Perm	Prot		
Protected Phases	7	4		3	8		5	2		1	6	
Permitted Phases			4						2			
Actuated Green, G (s)	2.9	29.7	29.7	10.0	36.8		19.0	30.9	30.9	1.5	13.4	
Effective Green, g (s)	2.9	29.7	29.7	10.0	36.8		19.0	30.9	30.9	1.5	13.4	
Actuated g/C Ratio	0.03	0.34	0.34	0.11	0.42		0.22	0.35	0.35	0.02	0.15	
Clearance Time (s)	4.0	4.0	4.0	4.0	4.0		4.0	4.0	4.0	4.0	4.0	
Vehicle Extension (s)	3.0	3.0	3.0	3.0	3.0		3.0	3.0	3.0	3.0	3.0	
Lane Grp Cap (vph)	59	1217	544	205	1482		740	653	555	30	279	
v/s Ratio Prot	0.02	c0.31		c0.11	0.14		c0.22	0.10		0.01	0.06	
v/s Ratio Perm			0.27						c0.20			
v/c Ratio	0.56	0.93	0.81	0.96	0.33		1.01	0.28	0.56	0.70	0.41	
Uniform Delay, d1	42.0	28.2	26.6	38.8	17.3		34.5	20.6	23.1	43.1	33.8	
Progression Factor	1.00	1.00	1.00	1.00	1.00		1.00	1.00	1.00	1.00	1.00	
Incremental Delay, d2	11.0	12.2	8.7	49.9	0.1		36.5	0.2	1.3	52.7	1.0	
Delay (s)	53.0	40.3	35.3	88.7	17.5		71.0	20.9	24.4	95.8	34.8	
Level of Service	D	D	D	F	B		E	C	C	F	C	
Approach Delay (s)		38.5			37.5			48.9			43.9	
Approach LOS		D			D			D			D	

Intersection Summary			
HCM Average Control Delay	42.0	HCM Level of Service	D
HCM Volume to Capacity ratio	0.86		
Actuated Cycle Length (s)	88.1	Sum of lost time (s)	12.0
Intersection Capacity Utilization	75.1%	ICU Level of Service	D
Analysis Period (min)	15		

c Critical Lane Group

Movement	EBL	EBT	EBR	WBL	WBT	WBR	NBL	NBT	NBR	SBL	SBT	SBR
Lane Configurations												
Volume (vph)	10	630	849	220	140	68	492	391	140	45	249	10
Ideal Flow (vphpl)	1900	1900	1900	1900	1900	1900	1900	1900	1900	1900	1900	1900
Total Lost time (s)	4.0	4.0	4.0	4.0	4.0		4.0	4.0	4.0	4.0	4.0	
Lane Util. Factor	1.00	0.95	1.00	1.00	1.00		0.97	0.95	1.00	1.00	1.00	
Frt	1.00	1.00	0.85	1.00	0.95		1.00	1.00	0.85	1.00	0.99	
Flt Protected	0.95	1.00	1.00	0.95	1.00		0.95	1.00	1.00	0.95	1.00	
Satd. Flow (prot)	1770	3539	1583	1770	1777		3400	3505	1568	1719	1796	
Flt Permitted	0.95	1.00	1.00	0.95	1.00		0.95	1.00	1.00	0.95	1.00	
Satd. Flow (perm)	1770	3539	1583	1770	1777		3400	3505	1568	1719	1796	
Peak-hour factor, PHF	0.92	0.92	0.92	0.92	0.92	0.92	0.92	0.92	0.92	0.92	0.92	0.92
Adj. Flow (vph)	11	685	923	239	152	74	535	425	152	49	271	11
RTOR Reduction (vph)	0	0	0	0	23	0	0	0	101	0	2	0
Lane Group Flow (vph)	11	685	923	239	203	0	535	425	51	49	280	0
Heavy Vehicles (%)	2%	2%	2%	2%	2%	1%	3%	3%	3%	5%	5%	10%
Turn Type	Prot		Free	Prot			Prot		Perm	Prot		
Protected Phases	7	4		3	8		5	2		1	6	
Permitted Phases			Free						2			
Actuated Green, G (s)	0.8	18.8	72.7	10.0	28.0		12.0	24.4	24.4	3.5	15.9	
Effective Green, g (s)	0.8	18.8	72.7	10.0	28.0		12.0	24.4	24.4	3.5	15.9	
Actuated g/C Ratio	0.01	0.26	1.00	0.14	0.39		0.17	0.34	0.34	0.05	0.22	
Clearance Time (s)	4.0	4.0		4.0	4.0		4.0	4.0	4.0	4.0	4.0	
Vehicle Extension (s)	3.0	3.0		3.0	3.0		3.0	3.0	3.0	3.0	3.0	
Lane Grp Cap (vph)	19	915	1583	243	684		561	1176	526	83	393	
v/s Ratio Prot	0.01	c0.19		c0.14	0.11		c0.16	0.12		0.03	0.16	
v/s Ratio Perm			c0.58						0.03			
v/c Ratio	0.58	0.75	0.58	0.98	0.30		0.95	0.36	0.10	0.59	0.71	
Uniform Delay, d1	35.8	24.8	0.0	31.3	15.5		30.1	18.3	16.6	33.9	26.3	
Progression Factor	1.00	1.00	1.00	1.00	1.00		1.00	1.00	1.00	1.00	1.00	
Incremental Delay, d2	36.3	3.4	1.6	52.8	0.2		26.7	0.2	0.1	10.7	6.0	
Delay (s)	72.1	28.2	1.6	84.0	15.8		56.7	18.4	16.7	44.6	32.3	
Level of Service	E	C	A	F	B		E	B	B	D	C	
Approach Delay (s)		13.3			50.8			36.6			34.1	
Approach LOS		B			D			D			C	

Intersection Summary			
HCM Average Control Delay	27.6	HCM Level of Service	C
HCM Volume to Capacity ratio	0.73		
Actuated Cycle Length (s)	72.7	Sum of lost time (s)	8.0
Intersection Capacity Utilization	70.7%	ICU Level of Service	C
Analysis Period (min)	15		

c Critical Lane Group

Movement	EBL	EBT	EBR	WBL	WBT	WBR	NBL	NBT	NBR	SBL	SBT	SBR
Lane Configurations												
Volume (vph)	0	0	0	470	0	478	360	645	0	0	1243	165
Ideal Flow (vphpl)	1900	1900	1900	1900	1900	1900	1900	1900	1900	1900	1900	1900
Total Lost time (s)				4.0	4.0	4.0	4.0	4.0			4.0	
Lane Util. Factor				0.95	0.95	1.00	0.97	0.95			0.95	
Frt				1.00	1.00	0.85	1.00	1.00			0.98	
Flt Protected				0.95	0.95	1.00	0.95	1.00			1.00	
Satd. Flow (prot)				1665	1665	1568	3400	3539			3477	
Flt Permitted				0.95	0.95	1.00	0.95	1.00			1.00	
Satd. Flow (perm)				1665	1665	1568	3400	3539			3477	
Peak-hour factor, PHF	0.94	0.94	0.94	0.94	0.94	0.94	0.94	0.94	0.94	0.94	0.94	0.94
Adj. Flow (vph)	0	0	0	500	0	509	383	686	0	0	1322	176
RTOR Reduction (vph)	0	0	0	0	0	0	0	0	0	0	11	0
Lane Group Flow (vph)	0	0	0	250	250	509	383	686	0	0	1487	0
Heavy Vehicles (%)	0%	0%	0%	3%	3%	3%	3%	2%	3%	2%	2%	2%
Turn Type				Perm		Free	Prot					
Protected Phases					8		5	2			6	
Permitted Phases				8		Free						
Actuated Green, G (s)				17.1	17.1	80.0	11.2	54.0			38.8	
Effective Green, g (s)				17.1	17.1	80.0	11.2	54.9			39.7	
Actuated g/C Ratio				0.21	0.21	1.00	0.14	0.69			0.50	
Clearance Time (s)				4.0	4.0		4.0	4.9			4.9	
Vehicle Extension (s)				3.0	3.0		3.0	3.0			3.0	
Lane Grp Cap (vph)				356	356	1568	476	2429			1725	
v/s Ratio Prot							c0.11	0.19			c0.43	
v/s Ratio Perm				c0.15	0.15	0.32						
v/c Ratio				0.70	0.70	0.32	0.80	0.28			0.86	
Uniform Delay, d1				29.1	29.1	0.0	33.3	4.9			17.7	
Progression Factor				1.00	1.00	1.00	1.00	1.00			1.00	
Incremental Delay, d2				6.2	6.2	0.6	9.6	0.1			4.7	
Delay (s)				35.3	35.3	0.6	42.9	4.9			22.4	
Level of Service				D	D	A	D	A			C	
Approach Delay (s)		0.0			17.7			18.5			22.4	
Approach LOS		A			B			B			C	

Intersection Summary			
HCM Average Control Delay	20.0	HCM Level of Service	B
HCM Volume to Capacity ratio	0.81		
Actuated Cycle Length (s)	80.0	Sum of lost time (s)	12.0
Intersection Capacity Utilization	72.9%	ICU Level of Service	C
Analysis Period (min)	15		

c Critical Lane Group

Movement	EBL	EBT	EBR	WBL	WBT	WBR	NBL	NBT	NBR	SBL	SBT	SBR
Lane Configurations												
Volume (vph)	126	0	520	0	0	0	0	879	450	781	933	0
Ideal Flow (vphpl)	1900	1900	1900	1900	1900	1900	1900	1900	1900	1900	1900	1900
Total Lost time (s)	4.0	4.0	4.0					4.0	4.9	4.0	4.0	
Lane Util. Factor	1.00	0.95	0.95					0.95	1.00	0.97	0.95	
Frt	1.00	0.85	0.85					1.00	0.85	1.00	1.00	
Flt Protected	0.95	1.00	1.00					1.00	1.00	0.95	1.00	
Satd. Flow (prot)	1752	1490	1490					3539	1583	3467	3574	
Flt Permitted	0.95	1.00	1.00					1.00	1.00	0.95	1.00	
Satd. Flow (perm)	1752	1490	1490					3539	1583	3467	3574	
Peak-hour factor, PHF	0.95	0.95	0.95	0.95	0.95	0.95	0.95	0.95	0.95	0.95	0.95	0.95
Adj. Flow (vph)	133	0	547	0	0	0	0	925	474	822	982	0
RTOR Reduction (vph)	0	134	134	0	0	0	0	0	307	0	0	0
Lane Group Flow (vph)	133	140	139	0	0	0	0	925	167	822	982	0
Heavy Vehicles (%)	3%	3%	3%	0%	0%	0%	2%	2%	2%	1%	1%	1%
Turn Type	Perm		Perm						Perm	Prot		
Protected Phases		4						2		1	6	
Permitted Phases	4		4						2			
Actuated Green, G (s)	12.8	12.8	12.8					26.7	26.7	22.7	53.4	
Effective Green, g (s)	13.7	13.7	13.7					27.6	26.7	22.7	54.3	
Actuated g/C Ratio	0.18	0.18	0.18					0.36	0.35	0.30	0.71	
Clearance Time (s)	4.9	4.9	4.9					4.9	4.9	4.0	4.9	
Vehicle Extension (s)	3.0	3.0	3.0					3.0	3.0	3.0	3.0	
Lane Grp Cap (vph)	316	269	269					1285	556	1036	2554	
v/s Ratio Prot		c0.09						c0.26		c0.24	0.27	
v/s Ratio Perm	0.08		0.09						0.11			
v/c Ratio	0.42	0.52	0.52					0.72	0.30	0.79	0.38	
Uniform Delay, d1	27.6	28.2	28.2					20.9	17.9	24.5	4.3	
Progression Factor	1.00	1.00	1.00					1.00	1.00	1.00	1.00	
Incremental Delay, d2	0.9	1.8	1.7					2.0	0.3	4.3	0.1	
Delay (s)	28.5	30.0	29.9					22.8	18.2	28.7	4.4	
Level of Service	C	C	C					C	B	C	A	
Approach Delay (s)		29.7			0.0			21.3			15.5	
Approach LOS		C			A			C			B	

Intersection Summary			
HCM Average Control Delay	20.0	HCM Level of Service	C
HCM Volume to Capacity ratio	0.70		
Actuated Cycle Length (s)	76.0	Sum of lost time (s)	12.0
Intersection Capacity Utilization	72.9%	ICU Level of Service	C
Analysis Period (min)	15		

c Critical Lane Group

Movement	EBL	EBT	EBR	WBL	WBT	WBR	NBL	NBT	NBR	SBL	SBT	SBR
Lane Configurations												
Volume (vph)	410	10	385	10	10	10	158	40	10	10	40	50
Ideal Flow (vphpl)	1900	1900	1900	1900	1900	1900	1900	1900	1900	1900	1900	1900
Total Lost time (s)	4.0	4.0			4.0			4.0			4.0	
Lane Util. Factor	1.00	1.00			1.00			1.00			1.00	
Frt	1.00	0.85			0.95			0.99			0.93	
Flt Protected	0.95	1.00			0.98			0.96			0.99	
Satd. Flow (prot)	1787	1606			1785			1765			1745	
Flt Permitted	0.74	1.00			0.89			0.71			0.96	
Satd. Flow (perm)	1384	1606			1608			1297			1689	
Peak-hour factor, PHF	0.92	0.92	0.92	0.92	0.92	0.92	0.92	0.92	0.92	0.92	0.92	0.92
Adj. Flow (vph)	446	11	418	11	11	11	172	43	11	11	43	54
RTOR Reduction (vph)	0	215	0	0	6	0	0	3	0	0	37	0
Lane Group Flow (vph)	446	214	0	0	27	0	0	223	0	0	71	0
Heavy Vehicles (%)	1%	1%	1%	0%	0%	0%	3%	3%	3%	1%	1%	1%
Turn Type	Perm			Perm			Perm			Perm		
Protected Phases		4			8			2			6	
Permitted Phases	4			8			2			6		
Actuated Green, G (s)	19.2	19.2			19.2			12.3			12.3	
Effective Green, g (s)	19.2	19.2			19.2			12.3			12.3	
Actuated g/C Ratio	0.49	0.49			0.49			0.31			0.31	
Clearance Time (s)	4.0	4.0			4.0			4.0			4.0	
Vehicle Extension (s)	3.0	3.0			3.0			3.0			3.0	
Lane Grp Cap (vph)	673	781			782			404			526	
v/s Ratio Prot		0.13										
v/s Ratio Perm	c0.32				0.02			c0.17			0.04	
v/c Ratio	0.66	0.27			0.03			0.55			0.13	
Uniform Delay, d1	7.7	6.0			5.3			11.3			9.8	
Progression Factor	1.00	1.00			1.00			1.00			1.00	
Incremental Delay, d2	2.5	0.2			0.0			1.6			0.1	
Delay (s)	10.2	6.2			5.3			12.9			9.9	
Level of Service	B	A			A			B			A	
Approach Delay (s)		8.2			5.3			12.9			9.9	
Approach LOS		A			A			B			A	

Intersection Summary			
HCM Average Control Delay	9.1	HCM Level of Service	A
HCM Volume to Capacity ratio	0.62		
Actuated Cycle Length (s)	39.5	Sum of lost time (s)	8.0
Intersection Capacity Utilization	54.2%	ICU Level of Service	A
Analysis Period (min)	15		

c Critical Lane Group

Movement	EBL	EBT	EBR	WBL	WBT	WBR	NBL	NBT	NBR	SBL	SBT	SBR
Lane Configurations												
Volume (vph)	30	1020	700	210	390	470	660	237	410	142	138	10
Ideal Flow (vphpl)	1900	1900	1900	1900	1900	1900	1900	1900	1900	1900	1900	1900
Total Lost time (s)	4.0	4.0	4.0	4.0	4.0		4.0	4.0	4.0	4.0	4.0	
Lane Util. Factor	1.00	0.95	1.00	1.00	0.95		0.97	1.00	1.00	1.00	1.00	
Frt	1.00	1.00	0.85	1.00	0.92		1.00	1.00	0.85	1.00	0.99	
Flt Protected	0.95	1.00	1.00	0.95	1.00		0.95	1.00	1.00	0.95	1.00	
Satd. Flow (prot)	1805	3610	1615	1805	3314		3433	1863	1583	1770	1844	
Flt Permitted	0.95	1.00	1.00	0.95	1.00		0.95	1.00	1.00	0.95	1.00	
Satd. Flow (perm)	1805	3610	1615	1805	3314		3433	1863	1583	1770	1844	
Peak-hour factor, PHF	0.92	0.92	0.92	0.92	0.92	0.92	0.92	0.92	0.92	0.92	0.92	0.92
Adj. Flow (vph)	33	1109	761	228	424	511	717	258	446	154	150	11
RTOR Reduction (vph)	0	0	0	0	220	0	0	0	144	0	3	0
Lane Group Flow (vph)	33	1109	761	228	715	0	717	258	302	154	158	0
Heavy Vehicles (%)	0%	0%	0%	0%	0%	0%	2%	2%	2%	2%	2%	2%
Turn Type	Prot		Free	Prot			Prot		Perm	Prot		
Protected Phases	7	4		3	8		5	2		1	6	
Permitted Phases			Free						2			
Actuated Green, G (s)	2.9	28.7	86.2	11.0	36.8		18.0	25.5	25.5	5.0	12.5	
Effective Green, g (s)	2.9	28.7	86.2	11.0	36.8		18.0	25.5	25.5	5.0	12.5	
Actuated g/C Ratio	0.03	0.33	1.00	0.13	0.43		0.21	0.30	0.30	0.06	0.15	
Clearance Time (s)	4.0	4.0		4.0	4.0		4.0	4.0	4.0	4.0	4.0	
Vehicle Extension (s)	3.0	3.0		3.0	3.0		3.0	3.0	3.0	3.0	3.0	
Lane Grp Cap (vph)	61	1202	1615	230	1415		717	551	468	103	267	
v/s Ratio Prot	0.02	c0.31		c0.13	0.22		c0.21	0.14		c0.09	0.09	
v/s Ratio Perm			0.47						c0.19			
v/c Ratio	0.54	0.92	0.47	0.99	0.51		1.00	0.47	0.65	1.50	0.59	
Uniform Delay, d1	41.0	27.7	0.0	37.6	18.0		34.1	24.8	26.4	40.6	34.5	
Progression Factor	1.00	1.00	1.00	1.00	1.00		1.00	1.00	1.00	1.00	1.00	
Incremental Delay, d2	9.4	11.7	1.0	56.7	0.3		33.6	0.6	3.1	266.9	3.5	
Delay (s)	50.4	39.3	1.0	94.2	18.3		67.7	25.4	29.5	307.5	37.9	
Level of Service	D	D	A	F	B		E	C	C	F	D	
Approach Delay (s)		24.2			33.2			48.0			169.7	
Approach LOS		C			C			D			F	

Intersection Summary			
HCM Average Control Delay	43.0	HCM Level of Service	D
HCM Volume to Capacity ratio	0.89		
Actuated Cycle Length (s)	86.2	Sum of lost time (s)	12.0
Intersection Capacity Utilization	79.9%	ICU Level of Service	D
Analysis Period (min)	15		

c Critical Lane Group

Movement	EBL	EBT	EBR	WBL	WBT	WBR	NBL	NBT	NBR	SBL	SBT	SBR
Lane Configurations												
Volume (vph)	10	600	972	160	120	113	940	1253	100	62	530	10
Ideal Flow (vphpl)	1900	1900	1900	1900	1900	1900	1900	1900	1900	1900	1900	1900
Total Lost time (s)	4.0	4.0	4.0	4.0	4.0		4.0	4.0	4.0	4.0	4.0	
Lane Util. Factor	1.00	0.95	1.00	1.00	1.00		0.97	0.95	1.00	1.00	1.00	
Frt	1.00	1.00	0.85	1.00	0.93		1.00	1.00	0.85	1.00	1.00	
Flt Protected	0.95	1.00	1.00	0.95	1.00		0.95	1.00	1.00	0.95	1.00	
Satd. Flow (prot)	1805	3610	1615	1752	1726		3467	3574	1599	1770	1876	
Flt Permitted	0.95	1.00	1.00	0.95	1.00		0.95	1.00	1.00	0.95	1.00	
Satd. Flow (perm)	1805	3610	1615	1752	1726		3467	3574	1599	1770	1876	
Peak-hour factor, PHF	0.92	0.92	0.92	0.92	0.92	0.92	0.92	0.92	0.92	0.92	0.92	0.92
Adj. Flow (vph)	11	652	1057	174	130	123	1022	1362	109	67	576	11
RTOR Reduction (vph)	0	0	0	0	32	0	0	0	27	0	1	0
Lane Group Flow (vph)	11	652	1057	174	221	0	1022	1362	82	67	586	0
Heavy Vehicles (%)	0%	0%	0%	3%	3%	1%	1%	1%	1%	2%	1%	2%
Turn Type	Prot		Free	Prot			Prot		Perm	Prot		
Protected Phases	7	4		3	8		5	2		1	6	
Permitted Phases			Free						2			
Actuated Green, G (s)	0.8	20.2	104.0	10.0	29.4		28.0	51.5	51.5	6.3	29.8	
Effective Green, g (s)	0.8	20.2	104.0	10.0	29.4		28.0	51.5	51.5	6.3	29.8	
Actuated g/C Ratio	0.01	0.19	1.00	0.10	0.28		0.27	0.50	0.50	0.06	0.29	
Clearance Time (s)	4.0	4.0		4.0	4.0		4.0	4.0	4.0	4.0	4.0	
Vehicle Extension (s)	3.0	3.0		3.0	3.0		3.0	3.0	3.0	3.0	3.0	
Lane Grp Cap (vph)	14	701	1615	168	488		933	1770	792	107	538	
v/s Ratio Prot	0.01	c0.18		c0.10	0.13		c0.29	0.38		0.04	c0.31	
v/s Ratio Perm			c0.65						0.05			
v/c Ratio	0.79	0.93	0.65	1.04	0.45		1.10	0.77	0.10	0.63	1.09	
Uniform Delay, d1	51.5	41.2	0.0	47.0	30.7		38.0	21.4	14.0	47.7	37.1	
Progression Factor	1.00	1.00	1.00	1.00	1.00		1.00	1.00	1.00	1.00	1.00	
Incremental Delay, d2	130.6	18.9	2.1	79.2	0.7		59.0	2.1	0.1	10.9	65.5	
Delay (s)	182.1	60.1	2.1	126.2	31.4		97.0	23.5	14.0	58.6	102.6	
Level of Service	F	E	A	F	C		F	C	B	E	F	
Approach Delay (s)		25.2			70.0			53.2			98.1	
Approach LOS		C			E			D			F	

Intersection Summary			
HCM Average Control Delay	51.0	HCM Level of Service	D
HCM Volume to Capacity ratio	1.01		
Actuated Cycle Length (s)	104.0	Sum of lost time (s)	12.0
Intersection Capacity Utilization	94.1%	ICU Level of Service	F
Analysis Period (min)	15		

c Critical Lane Group

Movement	EBL	EBT	EBR	WBL	WBT	WBR	NBL	NBT	NBR	SBL	SBT	SBR
Lane Configurations												
Volume (vph)	0	0	0	430	0	1376	440	1017	0	0	1559	233
Ideal Flow (vphpl)	1900	1900	1900	1900	1900	1900	1900	1900	1900	1900	1900	1900
Total Lost time (s)				4.0	4.0	4.0	4.0	4.0			4.0	
Lane Util. Factor				0.95	0.95	1.00	0.97	0.95			0.95	
Frt				1.00	1.00	0.85	1.00	1.00			0.98	
Flt Protected				0.95	0.95	1.00	0.95	1.00			1.00	
Satd. Flow (prot)				1698	1698	1599	3467	3574			3505	
Flt Permitted				0.95	0.95	1.00	0.95	1.00			1.00	
Satd. Flow (perm)				1698	1698	1599	3467	3574			3505	
Peak-hour factor, PHF	0.95	0.95	0.95	0.95	0.95	0.95	0.95	0.95	0.95	0.95	0.95	0.95
Adj. Flow (vph)	0	0	0	453	0	1448	463	1071	0	0	1641	245
RTOR Reduction (vph)	0	0	0	0	0	0	0	0	0	0	12	0
Lane Group Flow (vph)	0	0	0	226	227	1448	463	1071	0	0	1874	0
Heavy Vehicles (%)	0%	0%	0%	1%	1%	1%	1%	1%	1%	1%	1%	1%
Turn Type				Perm		Free	Prot					
Protected Phases					8		5	2			6	
Permitted Phases				8		Free						
Actuated Green, G (s)				16.2	16.2	82.4	13.0	57.3			40.3	
Effective Green, g (s)				16.2	16.2	82.4	13.0	58.2			41.2	
Actuated g/C Ratio				0.20	0.20	1.00	0.16	0.71			0.50	
Clearance Time (s)				4.0	4.0		4.0	4.9			4.9	
Vehicle Extension (s)				3.0	3.0		3.0	3.0			3.0	
Lane Grp Cap (vph)				334	334	1599	547	2524			1753	
v/s Ratio Prot							0.13	0.30			c0.53	
v/s Ratio Perm				0.13	0.13	c0.91						
v/c Ratio				0.68	0.68	0.91	0.85	0.42			1.07	
Uniform Delay, d1				30.7	30.7	0.0	33.7	5.1			20.6	
Progression Factor				1.00	1.00	1.00	1.00	1.00			1.00	
Incremental Delay, d2				5.4	5.4	8.9	11.6	0.1			42.6	
Delay (s)				36.0	36.1	8.9	45.3	5.2			63.2	
Level of Service				D	D	A	D	A			E	
Approach Delay (s)		0.0			15.4			17.3			63.2	
Approach LOS		A			B			B			E	

Intersection Summary			
HCM Average Control Delay	32.9	HCM Level of Service	C
HCM Volume to Capacity ratio	0.99		
Actuated Cycle Length (s)	82.4	Sum of lost time (s)	4.0
Intersection Capacity Utilization	89.7%	ICU Level of Service	E
Analysis Period (min)	15		

c Critical Lane Group

Movement	EBL	EBT	EBR	WBL	WBT	WBR	NBL	NBT	NBR	SBL	SBT	SBR
Lane Configurations												
Volume (vph)	349	0	540	0	0	0	0	1107	480	1045	944	0
Ideal Flow (vphpl)	1900	1900	1900	1900	1900	1900	1900	1900	1900	1900	1900	1900
Total Lost time (s)	4.0	4.0	4.0					4.0	4.9	4.0	4.0	
Lane Util. Factor	1.00	0.95	0.95					0.95	1.00	0.97	0.95	
Frt	1.00	0.85	0.85					1.00	0.85	1.00	1.00	
Flt Protected	0.95	1.00	1.00					1.00	1.00	0.95	1.00	
Satd. Flow (prot)	1787	1519	1519					3574	1599	3467	3574	
Flt Permitted	0.95	1.00	1.00					1.00	1.00	0.95	1.00	
Satd. Flow (perm)	1787	1519	1519					3574	1599	3467	3574	
Peak-hour factor, PHF	0.92	0.92	0.92	0.92	0.92	0.92	0.92	0.92	0.92	0.92	0.92	0.92
Adj. Flow (vph)	379	0	587	0	0	0	0	1203	522	1136	1026	0
RTOR Reduction (vph)	0	123	123	0	0	0	0	0	297	0	0	0
Lane Group Flow (vph)	379	171	170	0	0	0	0	1203	225	1136	1026	0
Heavy Vehicles (%)	1%	1%	1%	0%	0%	0%	1%	1%	1%	1%	1%	1%
Turn Type	Perm		Perm						Perm	Prot		
Protected Phases		4						2		1	6	
Permitted Phases	4		4						2			
Actuated Green, G (s)	23.9	23.9	23.9					37.1	37.1	35.0	76.1	
Effective Green, g (s)	24.8	24.8	24.8					38.0	37.1	35.0	77.0	
Actuated g/C Ratio	0.23	0.23	0.23					0.35	0.34	0.32	0.70	
Clearance Time (s)	4.9	4.9	4.9					4.9	4.9	4.0	4.9	
Vehicle Extension (s)	3.0	3.0	3.0					3.0	3.0	3.0	3.0	
Lane Grp Cap (vph)	404	343	343					1237	540	1105	2506	
v/s Ratio Prot		0.11						c0.34		c0.33	0.29	
v/s Ratio Perm	c0.21		0.11						0.14			
v/c Ratio	0.94	0.50	0.50					0.97	0.42	1.03	0.41	
Uniform Delay, d1	41.7	37.1	37.0					35.4	28.0	37.4	6.9	
Progression Factor	1.00	1.00	1.00					1.00	1.00	1.00	1.00	
Incremental Delay, d2	29.3	1.1	1.1					19.2	0.5	34.5	0.1	
Delay (s)	71.0	38.2	38.2					54.6	28.5	71.9	7.0	
Level of Service	E	D	D					D	C	E	A	
Approach Delay (s)		51.1			0.0			46.7			41.1	
Approach LOS		D			A			D			D	

Intersection Summary			
HCM Average Control Delay	45.1	HCM Level of Service	D
HCM Volume to Capacity ratio	0.98		
Actuated Cycle Length (s)	109.8	Sum of lost time (s)	12.0
Intersection Capacity Utilization	89.7%	ICU Level of Service	E
Analysis Period (min)	15		

c Critical Lane Group

Movement	EBL	EBT	EBR	WBL	WBT	WBR	NBL	NBT	NBR	SBL	SBT	SBR
Lane Configurations												
Volume (vph)	370	10	362	10	10	10	203	40	10	10	40	20
Ideal Flow (vphpl)	1900	1900	1900	1900	1900	1900	1900	1900	1900	1900	1900	1900
Total Lost time (s)	4.0	4.0			4.0			4.0			4.0	
Lane Util. Factor	1.00	1.00			1.00			1.00			1.00	
Frt	1.00	0.85			0.95			0.99			0.96	
Flt Protected	0.95	1.00			0.98			0.96			0.99	
Satd. Flow (prot)	1787	1607			1785			1764			1797	
Flt Permitted	0.74	1.00			0.89			0.72			0.95	
Satd. Flow (perm)	1384	1607			1609			1318			1714	
Peak-hour factor, PHF	0.94	0.94	0.94	0.94	0.94	0.94	0.94	0.94	0.94	0.94	0.94	0.94
Adj. Flow (vph)	394	11	385	11	11	11	216	43	11	11	43	21
RTOR Reduction (vph)	0	213	0	0	6	0	0	3	0	0	14	0
Lane Group Flow (vph)	394	183	0	0	27	0	0	267	0	0	61	0
Heavy Vehicles (%)	1%	1%	1%	0%	0%	0%	3%	3%	3%	1%	1%	1%
Turn Type	Perm			Perm			Perm			Perm		
Protected Phases		4			8			2			6	
Permitted Phases	4			8			2			6		
Actuated Green, G (s)	17.6	17.6			17.6			13.9			13.9	
Effective Green, g (s)	17.6	17.6			17.6			13.9			13.9	
Actuated g/C Ratio	0.45	0.45			0.45			0.35			0.35	
Clearance Time (s)	4.0	4.0			4.0			4.0			4.0	
Vehicle Extension (s)	3.0	3.0			3.0			3.0			3.0	
Lane Grp Cap (vph)	617	716			717			464			603	
v/s Ratio Prot		0.11										
v/s Ratio Perm	c0.28				0.02			c0.20			0.04	
v/c Ratio	0.64	0.25			0.04			0.58			0.10	
Uniform Delay, d1	8.5	6.8			6.2			10.4			8.6	
Progression Factor	1.00	1.00			1.00			1.00			1.00	
Incremental Delay, d2	2.2	0.2			0.0			1.7			0.1	
Delay (s)	10.7	7.0			6.2			12.1			8.7	
Level of Service	B	A			A			B			A	
Approach Delay (s)		8.8			6.2			12.1			8.7	
Approach LOS		A			A			B			A	

Intersection Summary			
HCM Average Control Delay	9.5	HCM Level of Service	A
HCM Volume to Capacity ratio	0.61		
Actuated Cycle Length (s)	39.5	Sum of lost time (s)	8.0
Intersection Capacity Utilization	54.5%	ICU Level of Service	A
Analysis Period (min)	15		

c Critical Lane Group

APPENDIX C:
SIGNAL WARRANT WORKSHEETS

FEHR & PEERS
TRANSPORTATION CONSULTANTS

Sheet No	1	of	6

Project	Holly Sugar Sports Park EIR
Scenario	Existing Conditions
Peak Hour	PM

Major Street	Corral Hollow Rd
Minor Street	Larch Rd

Turn Movement Volumes

	NB	SB	EB	WB
Left	34	8	13	60
Through	75	31	59	29
Right	84	6	77	39
Total	193	45	149	128

Major Street Direction

x	North/South
	East/West

Figure 4C-4
Warrant 3, Peak Hour (70% Factor)
(Rural Areas)

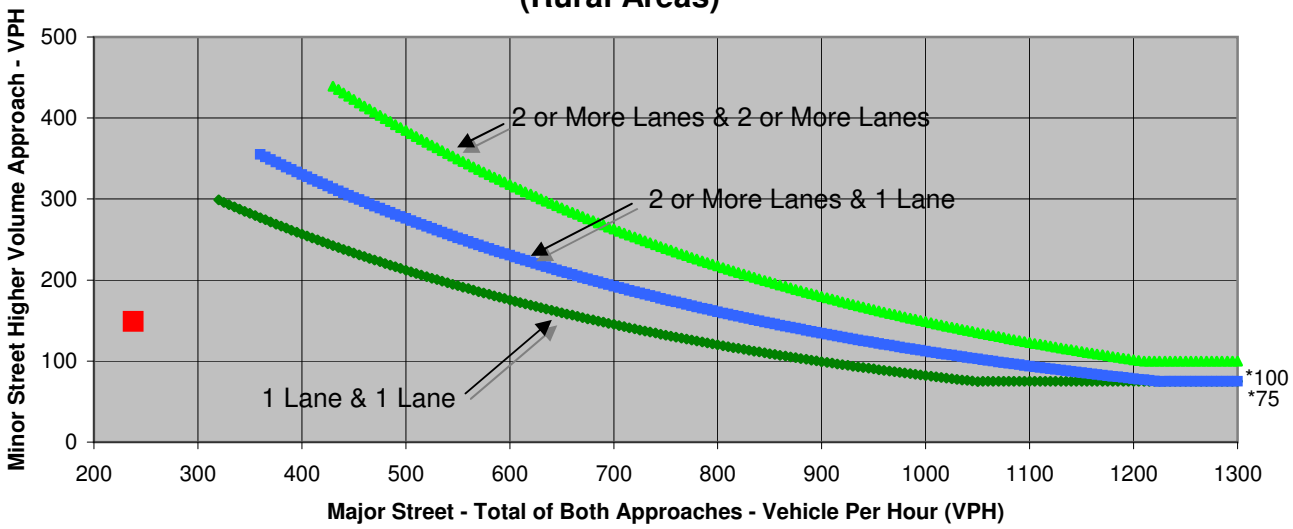

* Note: 100 VPH APPLIES AS THE LOWER THRESHOLD VOLUME FOR A MINOR STREET APPROACH WITH TWO OR MORE LANES AND 75 VPH APPLIES AS THE LOWER THRESHOLD VOLUME FOR A MINOR STREET APPROACHING WITH ONE LANE.

Source: *California Manual on Uniform Traffic Control Devices*, Caltrans, 2006

	Major Street	Minor Street	Warrant Met
	Corral Hollow Rd	Larch Rd	
Number of Approach Lanes	1	1	NO
Traffic Volume (VPH) *	238	149	

* Note: Traffic Volume for Major Street is Total Volume of Both Approches.
Traffic Volume for Minor Street is the Volume of High Volume Approach.

FEHR & PEERS
TRANSPORTATION CONSULTANTS

Sheet No	2	of	6

Project	Holly Sugar Sports Park EIR
Scenario	Existing Conditions
Peak Hour	SAT

Major Street	Corral Hollow Rd
Minor Street	Larch Rd

Turn Movement Volumes

	NB	SB	EB	WB
Left	11	4	10	89
Through	35	44	36	16
Right	69	9	42	22
Total	115	57	88	127

Major Street Direction

x	North/South
	East/West

Figure 4C-4
Warrant 3, Peak Hour (70% Factor)
(Rural Areas)

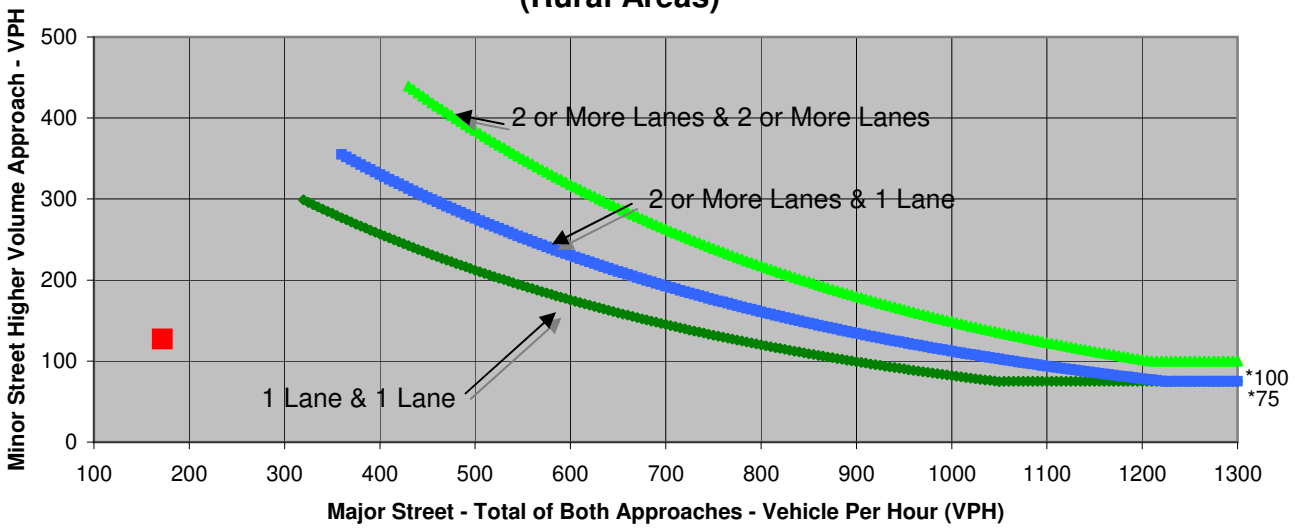

* Note: 100 VPH APPLIES AS THE LOWER THRESHOLD VOLUME FOR A MINOR STREET APPROACH WITH TWO OR MORE LANES AND 75 VPH APPLIES AS THE LOWER THRESHOLD VOLUME FOR A MINOR STREET APPROACHING WITH ONE LANE.

Source: *California Manual on Uniform Traffic Control Devices*, Caltrans, 2006

	Major Street	Minor Street	Warrant Met
	Corral Hollow Rd	Larch Rd	
Number of Approach Lanes	1	1	NO
Traffic Volume (VPH) *	172	127	

* Note: Traffic Volume for Major Street is Total Volume of Both Approches.
Traffic Volume for Minor Street is the Volume of High Volume Approach.

FEHR & PEERS
TRANSPORTATION CONSULTANTS

Sheet No	3	of	6

Project	Holly Sugar Sports Park EIR
Scenario	Existing Conditions
Peak Hour	PM

Major Street	Tracy Blvd
Minor Street	Larch Rd

Turn Movement Volumes

	NB	SB	EB	WB
Left	65	2	7	151
Through	148	89	77	65
Right	115	6	69	15
Total	328	97	153	231

Major Street Direction

x	North/South
	East/West

Figure 4C-4
Warrant 3, Peak Hour (70% Factor)
(Rural Areas)

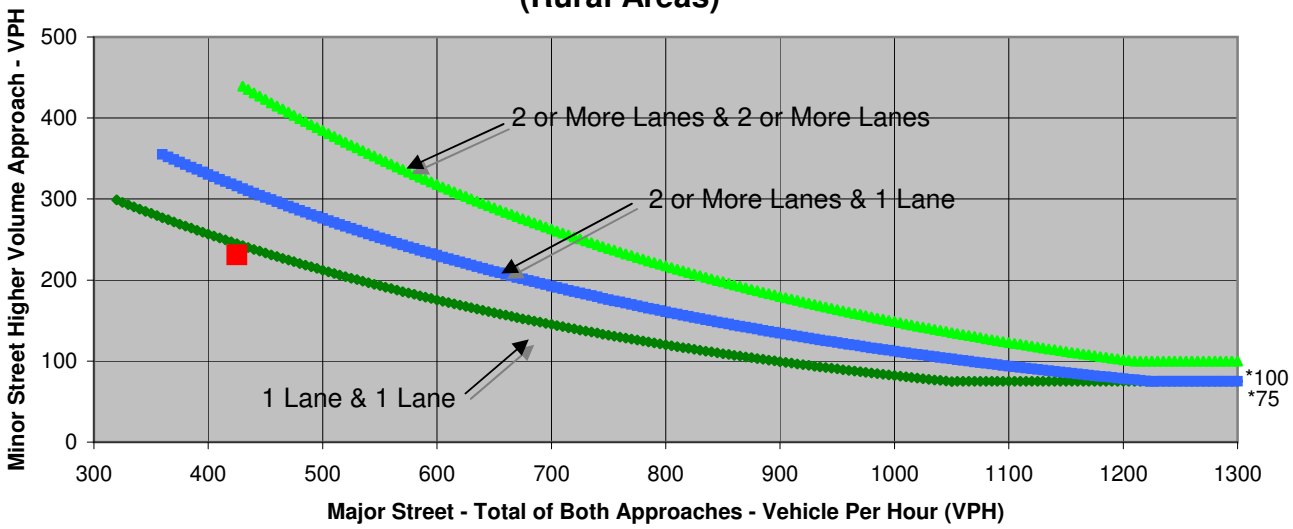

* Note: 100 VPH APPLIES AS THE LOWER THRESHOLD VOLUME FOR A MINOR STREET APPROACH WITH TWO OR MORE LANES AND 75 VPH APPLIES AS THE LOWER THRESHOLD VOLUME FOR A MINOR STREET APPROACHING WITH ONE LANE.

Source: *California Manual on Uniform Traffic Control Devices*, Caltrans, 2006

	Major Street	Minor Street	Warrant Met
	Tracy Blvd	Larch Rd	
Number of Approach Lanes	2	1	NO
Traffic Volume (VPH) *	425	231	

* Note: Traffic Volume for Major Street is Total Volume of Both Approches.
Traffic Volume for Minor Street is the Volume of High Volume Approach.

FEHR & PEERS
TRANSPORTATION CONSULTANTS

Sheet No	4	of	6

Project	Holly Sugar Sports Park EIR
Scenario	Existing Conditions
Peak Hour	SAT

Major Street	Tracy Blvd
Minor Street	Larch Rd

Turn Movement Volumes

	NB	SB	EB	WB
Left	80	8	8	92
Through	114	89	46	44
Right	67	9	69	2
Total	261	106	123	138

Major Street Direction

x	North/South
	East/West

Figure 4C-4
Warrant 3, Peak Hour (70% Factor)
(Rural Areas)

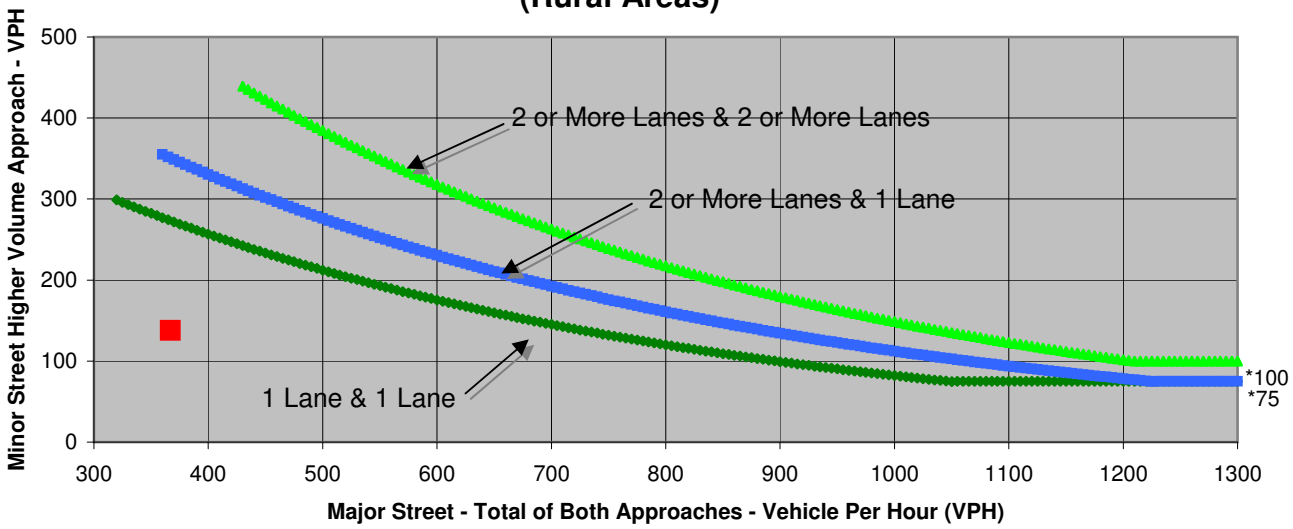

* Note: 100 VPH APPLIES AS THE LOWER THRESHOLD VOLUME FOR A MINOR STREET APPROACH WITH TWO OR MORE LANES AND 75 VPH APPLIES AS THE LOWER THRESHOLD VOLUME FOR A MINOR STREET APPROACHING WITH ONE LANE.

Source: *California Manual on Uniform Traffic Control Devices*, Caltrans, 2006

	Major Street	Minor Street	Warrant Met
	Tracy Blvd	Larch Rd	
Number of Approach Lanes	2	1	NO
Traffic Volume (VPH) *	367	138	

* Note: Traffic Volume for Major Street is Total Volume of Both Approches.
Traffic Volume for Minor Street is the Volume of High Volume Approach.

FEHR & PEERS
TRANSPORTATION CONSULTANTS

Sheet No	5	of	6

Project	Holly Sugar Sports Park EIR
Scenario	Existing Conditions
Peak Hour	PM

Major Street	Holly Dr
Minor Street	Larch Rd

Turn Movement Volumes

	NB	SB	EB	WB
Left	43	1	75	4
Through	28	35	5	8
Right	9	43	87	3
Total	80	79	167	15

Major Street Direction

x	North/South
	East/West

Figure 4C-4
Warrant 3, Peak Hour (70% Factor)
(Rural Areas)

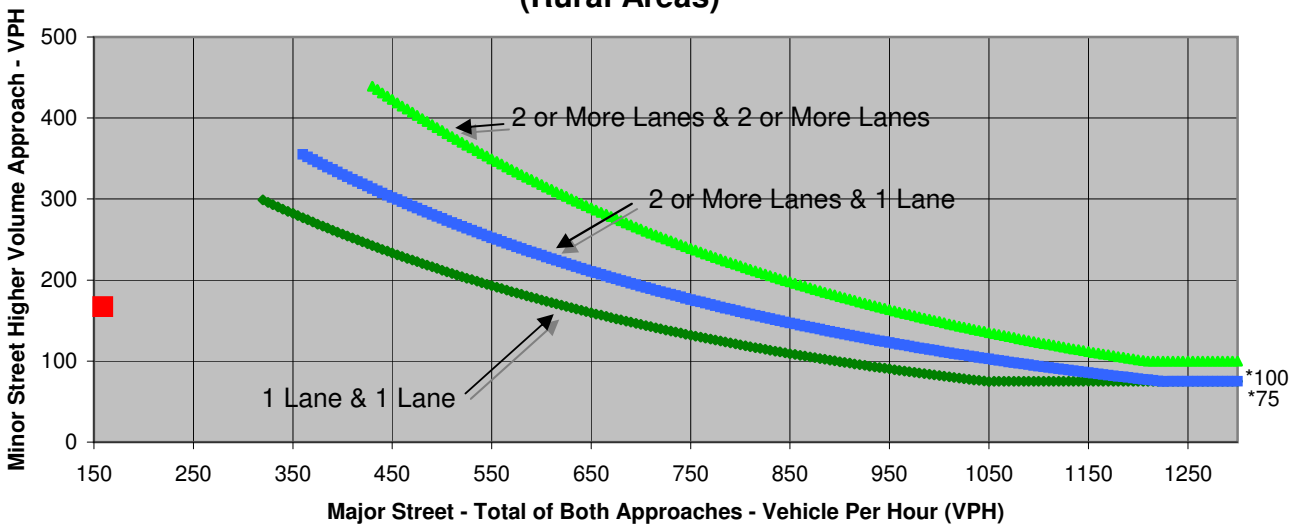

* Note: 100 VPH APPLIES AS THE LOWER THRESHOLD VOLUME FOR A MINOR STREET APPROACH WITH TWO OR MORE LANES AND 75 VPH APPLIES AS THE LOWER THRESHOLD VOLUME FOR A MINOR STREET APPROACHING WITH ONE LANE.

Source: *California Manual on Uniform Traffic Control Devices*, Caltrans, 2006

	Major Street	Minor Street	Warrant Met
	Holly Dr	Larch Rd	
Number of Approach Lanes	1	1	NO
Traffic Volume (VPH) *	159	167	

* Note: Traffic Volume for Major Street is Total Volume of Both Approches.
Traffic Volume for Minor Street is the Volume of High Volume Approach.

FEHR & PEERS
TRANSPORTATION CONSULTANTS

Sheet No	6	of	6

Project	Holly Sugar Sports Park EIR
Scenario	Existing Conditions
Peak Hour	SAT

Major Street	Holly Dr
Minor Street	Larch Rd

Turn Movement Volumes

	NB	SB	EB	WB
Left	33	3	35	2
Through	26	32	3	5
Right	2	18	47	1
Total	61	53	85	8

Major Street Direction

x	North/South
	East/West

Figure 4C-4
Warrant 3, Peak Hour (70% Factor)
(Rural Areas)

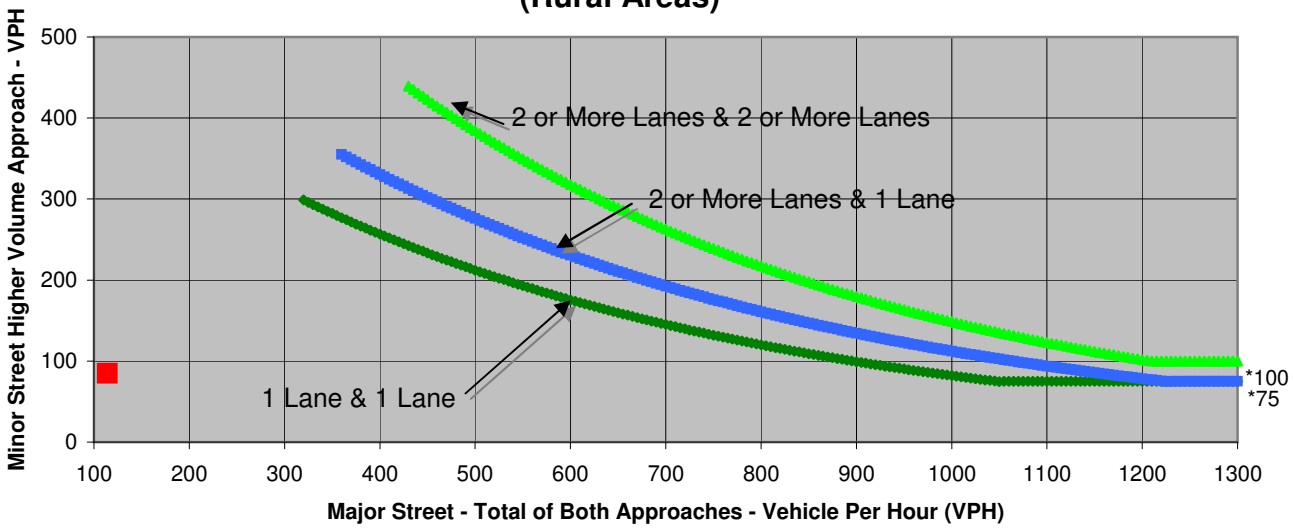

* Note: 100 VPH APPLIES AS THE LOWER THRESHOLD VOLUME FOR A MINOR STREET APPROACH WITH TWO OR MORE LANES AND 75 VPH APPLIES AS THE LOWER THRESHOLD VOLUME FOR A MINOR STREET APPROACHING WITH ONE LANE.

Source: *California Manual on Uniform Traffic Control Devices*, Caltrans, 2006

	Major Street	Minor Street	Warrant Met
	Holly Dr	Larch Rd	
Number of Approach Lanes	1	1	NO
Traffic Volume (VPH) *	114	85	

* Note: Traffic Volume for Major Street is Total Volume of Both Approches.
Traffic Volume for Minor Street is the Volume of High Volume Approach.

FEHR & PEERS
TRANSPORTATION CONSULTANTS

Sheet No	1	of	6

Project	Holly Sugar Sports Park EIR
Scenario	Near Term Conditions
Peak Hour	PM

Major Street	Corral Hollow Rd
Minor Street	Larch Rd

Turn Movement Volumes

	NB	SB	EB	WB
Left	40	10	20	70
Through	80	40	60	30
Right	90	10	80	40
Total	210	60	160	140

Major Street Direction

x	North/South
	East/West

Figure 4C-4
Warrant 3, Peak Hour (70% Factor)
(Rural Areas)

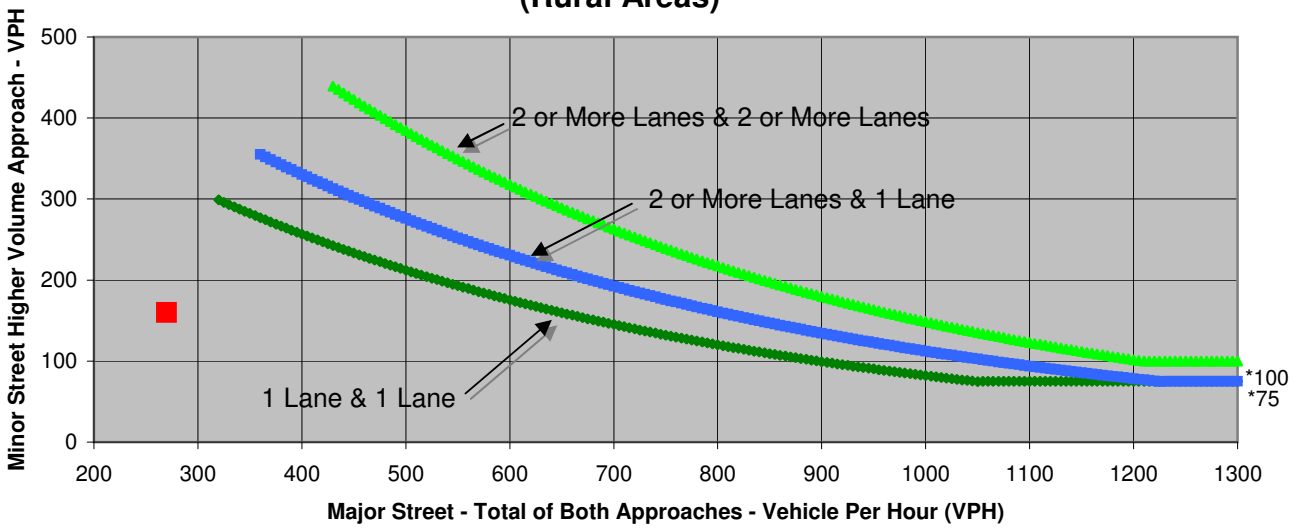

* Note: 100 VPH APPLIES AS THE LOWER THRESHOLD VOLUME FOR A MINOR STREET APPROACH WITH TWO OR MORE LANES AND 75 VPH APPLIES AS THE LOWER THRESHOLD VOLUME FOR A MINOR STREET APPROACHING WITH ONE LANE.

Source: *California Manual on Uniform Traffic Control Devices*, Caltrans, 2006

	Major Street	Minor Street	Warrant Met
	Corral Hollow Rd	Larch Rd	
Number of Approach Lanes	1	1	NO
Traffic Volume (VPH) *	270	160	

* Note: Traffic Volume for Major Street is Total Volume of Both Approches.
Traffic Volume for Minor Street is the Volume of High Volume Approach.

FEHR & PEERS
TRANSPORTATION CONSULTANTS

Sheet No	2	of	6

Project	Holly Sugar Sports Park EIR
Scenario	Near Term Conditions
Peak Hour	SAT

Major Street	Corral Hollow Rd
Minor Street	Larch Rd

Turn Movement Volumes

	NB	SB	EB	WB
Left	20	10	20	90
Through	40	50	40	20
Right	70	10	50	30
Total	130	70	110	140

Major Street Direction

x	North/South
	East/West

Figure 4C-4
Warrant 3, Peak Hour (70% Factor)
(Rural Areas)

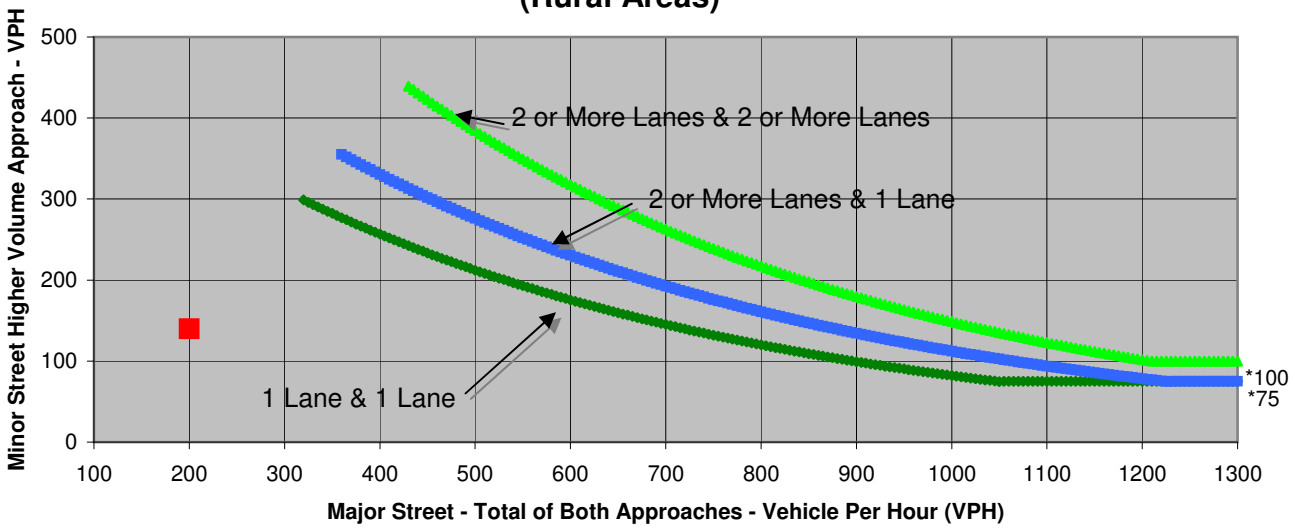

* Note: 100 VPH APPLIES AS THE LOWER THRESHOLD VOLUME FOR A MINOR STREET APPROACH WITH TWO OR MORE LANES AND 75 VPH APPLIES AS THE LOWER THRESHOLD VOLUME FOR A MINOR STREET APPROACHING WITH ONE LANE.

Source: *California Manual on Uniform Traffic Control Devices*, Caltrans, 2006

	Major Street	Minor Street	Warrant Met
	Corral Hollow Rd	Larch Rd	
Number of Approach Lanes	1	1	NO
Traffic Volume (VPH) *	200	140	

* Note: Traffic Volume for Major Street is Total Volume of Both Approches.
Traffic Volume for Minor Street is the Volume of High Volume Approach.

FEHR & PEERS
TRANSPORTATION CONSULTANTS

Sheet No	3	of	6

Project	Holly Sugar Sports Park EIR
Scenario	Near Term Conditions
Peak Hour	PM

Major Street	Tracy Blvd
Minor Street	Larch Rd

Turn Movement Volumes

	NB	SB	EB	WB
Left	70	10	10	160
Through	150	90	80	70
Right	120	10	70	20
Total	340	110	160	250

Major Street Direction

x	North/South
	East/West

Figure 4C-4
Warrant 3, Peak Hour (70% Factor)
(Rural Areas)

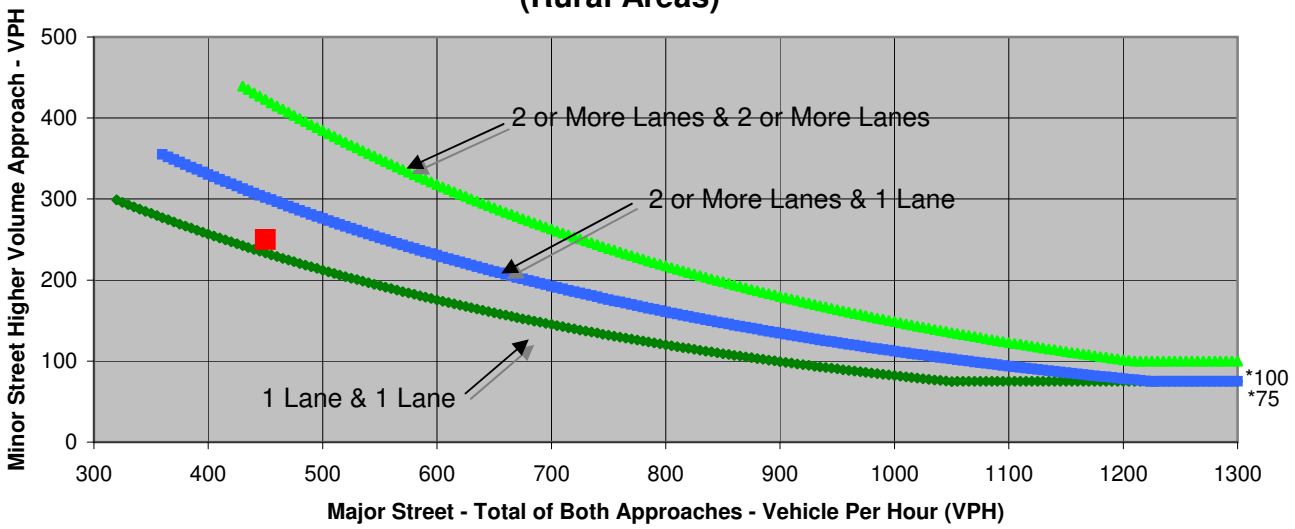

* Note: 100 VPH APPLIES AS THE LOWER THRESHOLD VOLUME FOR A MINOR STREET APPROACH WITH TWO OR MORE LANES AND 75 VPH APPLIES AS THE LOWER THRESHOLD VOLUME FOR A MINOR STREET APPROACHING WITH ONE LANE.

Source: *California Manual on Uniform Traffic Control Devices*, Caltrans, 2006

	Major Street	Minor Street	Warrant Met
	Tracy Blvd	Larch Rd	
Number of Approach Lanes	2	1	NO
Traffic Volume (VPH) *	450	250	

* Note: Traffic Volume for Major Street is Total Volume of Both Approches.
Traffic Volume for Minor Street is the Volume of High Volume Approach.

FEHR & PEERS
TRANSPORTATION CONSULTANTS

Sheet No	4	of	6

Project	Holly Sugar Sports Park EIR
Scenario	Near Term Conditions
Peak Hour	SAT

Major Street	Tracy Blvd
Minor Street	Larch Rd

Turn Movement Volumes

	NB	SB	EB	WB
Left	90	10	10	100
Through	120	90	50	50
Right	70	10	70	10
Total	280	110	130	160

Major Street Direction

x	North/South
	East/West

Figure 4C-4
Warrant 3, Peak Hour (70% Factor)
(Rural Areas)

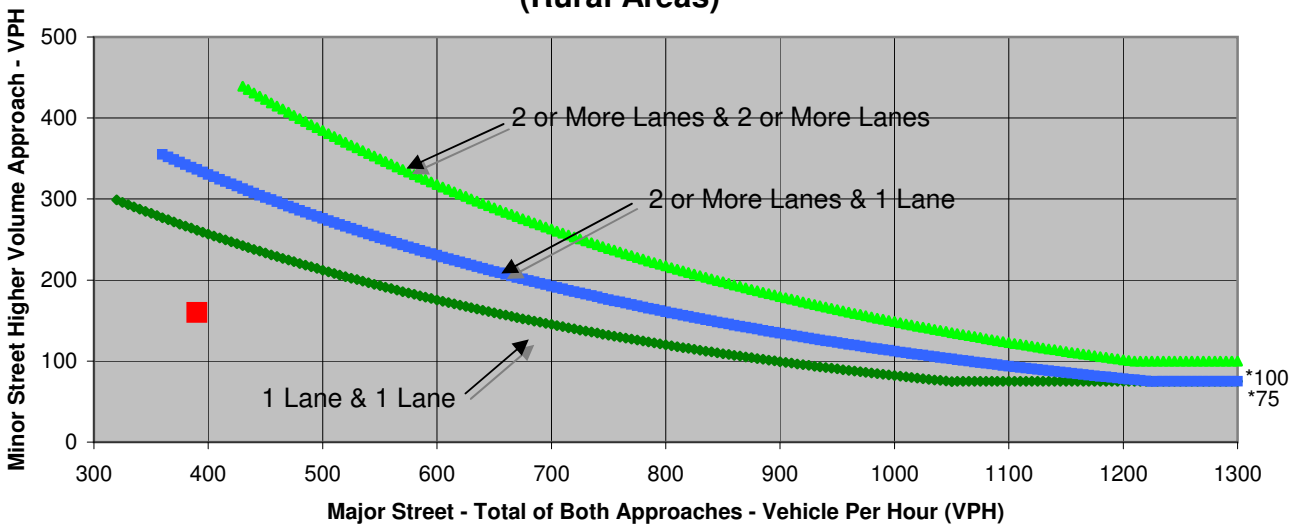

* Note: 100 VPH APPLIES AS THE LOWER THRESHOLD VOLUME FOR A MINOR STREET APPROACH WITH TWO OR MORE LANES AND 75 VPH APPLIES AS THE LOWER THRESHOLD VOLUME FOR A MINOR STREET APPROACHING WITH ONE LANE.

Source: *California Manual on Uniform Traffic Control Devices*, Caltrans, 2006

	Major Street	Minor Street	Warrant Met
	Tracy Blvd	Larch Rd	
Number of Approach Lanes	2	1	NO
Traffic Volume (VPH) *	390	160	

* Note: Traffic Volume for Major Street is Total Volume of Both Approches.
Traffic Volume for Minor Street is the Volume of High Volume Approach.

FEHR & PEERS
TRANSPORTATION CONSULTANTS

Sheet No	5	of	6

Project	Holly Sugar Sports Park EIR
Scenario	Near Term Conditions
Peak Hour	PM

Major Street	Holly Dr
Minor Street	Larch Rd

Turn Movement Volumes

	NB	SB	EB	WB
Left	50	10	80	10
Through	30	40	10	10
Right	10	50	90	10
Total	90	100	180	30

Major Street Direction

x	North/South
	East/West

Figure 4C-4
Warrant 3, Peak Hour (70% Factor)
(Rural Areas)

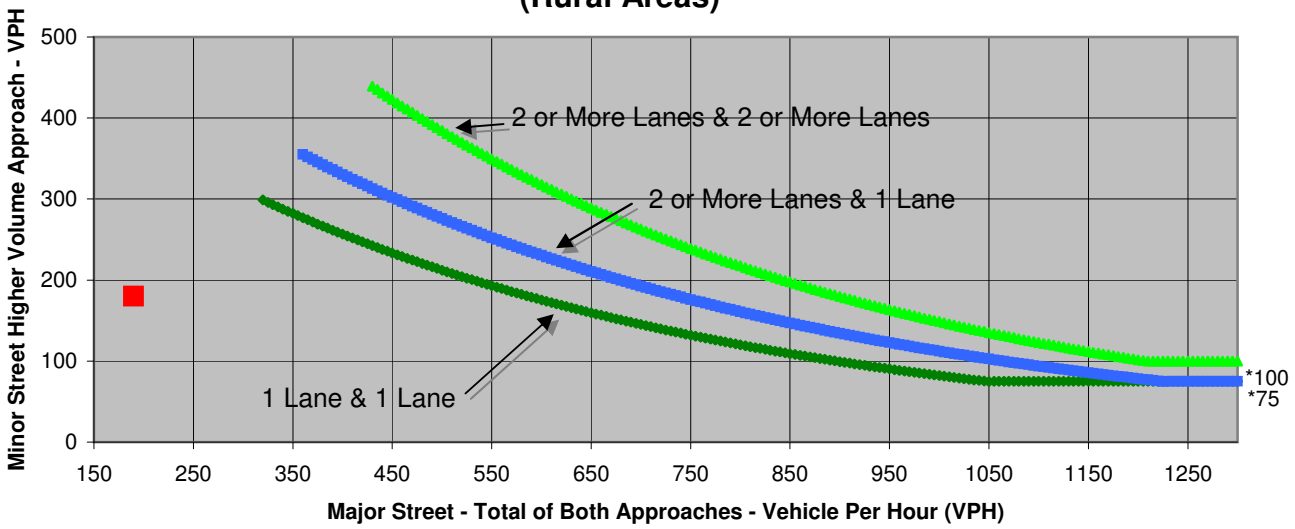

* Note: 100 VPH APPLIES AS THE LOWER THRESHOLD VOLUME FOR A MINOR STREET APPROACH WITH TWO OR MORE LANES AND 75 VPH APPLIES AS THE LOWER THRESHOLD VOLUME FOR A MINOR STREET APPROACHING WITH ONE LANE.

Source: *California Manual on Uniform Traffic Control Devices*, Caltrans, 2006

	Major Street	Minor Street	Warrant Met
	Holly Dr	Larch Rd	
Number of Approach Lanes	1	1	NO
Traffic Volume (VPH) *	190	180	

* Note: Traffic Volume for Major Street is Total Volume of Both Approches.
Traffic Volume for Minor Street is the Volume of High Volume Approach.

FEHR & PEERS
TRANSPORTATION CONSULTANTS

Sheet No	6	of	6

Project	Holly Sugar Sports Park EIR
Scenario	Near-Term Conditions
Peak Hour	SAT

Major Street	Holly Dr
Minor Street	Larch Rd

Turn Movement Volumes

	NB	SB	EB	WB
Left	40	10	40	10
Through	30	40	10	10
Right	10	20	50	10
Total	80	70	100	30

Major Street Direction

x	North/South
	East/West

Figure 4C-4
Warrant 3, Peak Hour (70% Factor)
(Rural Areas)

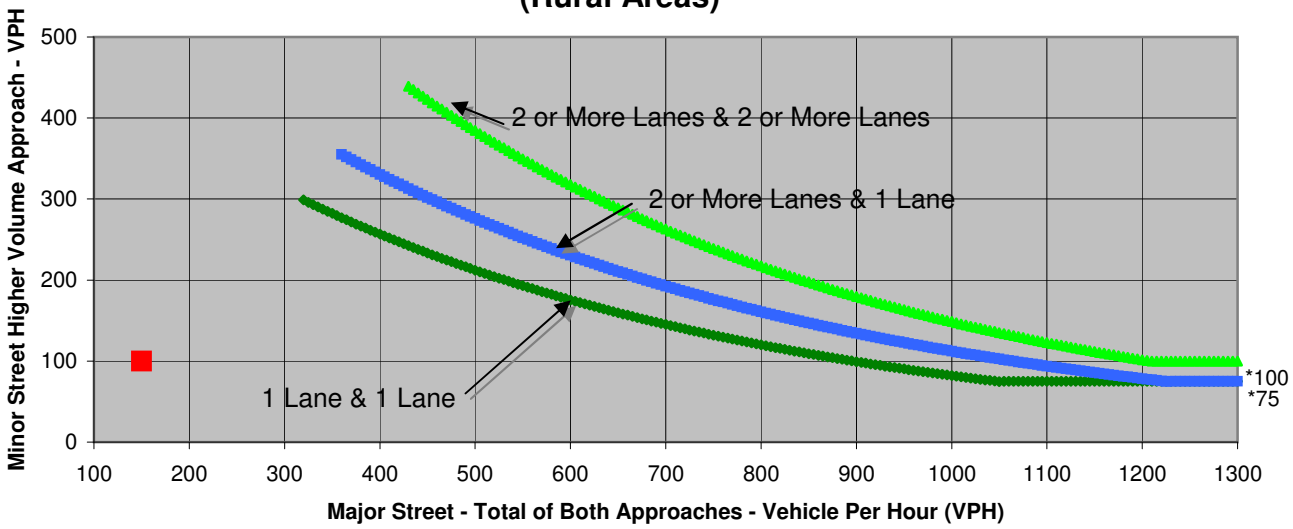

* Note: 100 VPH APPLIES AS THE LOWER THRESHOLD VOLUME FOR A MINOR STREET APPROACH WITH TWO OR MORE LANES AND 75 VPH APPLIES AS THE LOWER THRESHOLD VOLUME FOR A MINOR STREET APPROACHING WITH ONE LANE.

Source: *California Manual on Uniform Traffic Control Devices*, Caltrans, 2006

	Major Street	Minor Street	Warrant Met
	Holly Dr	Larch Rd	
Number of Approach Lanes	1	1	NO
Traffic Volume (VPH) *	150	100	

* Note: Traffic Volume for Major Street is Total Volume of Both Approches.
Traffic Volume for Minor Street is the Volume of High Volume Approach.

FEHR & PEERS
TRANSPORTATION CONSULTANTS

Sheet No	1	of	10

Project	Holly Sugar Sports Park EIR
Scenario	Near Term Plus Project Conditions
Peak Hour	PM

Major Street	Corral Hollow Rd
Minor Street	Larch Rd

Turn Movement Volumes

	NB	SB	EB	WB
Left	40	14	20	70
Through	130	63	60	30
Right	90	10	80	47
Total	260	87	160	147

Major Street Direction

x	North/South
	East/West

Figure 4C-4
Warrant 3, Peak Hour (70% Factor)
(Rural Areas)

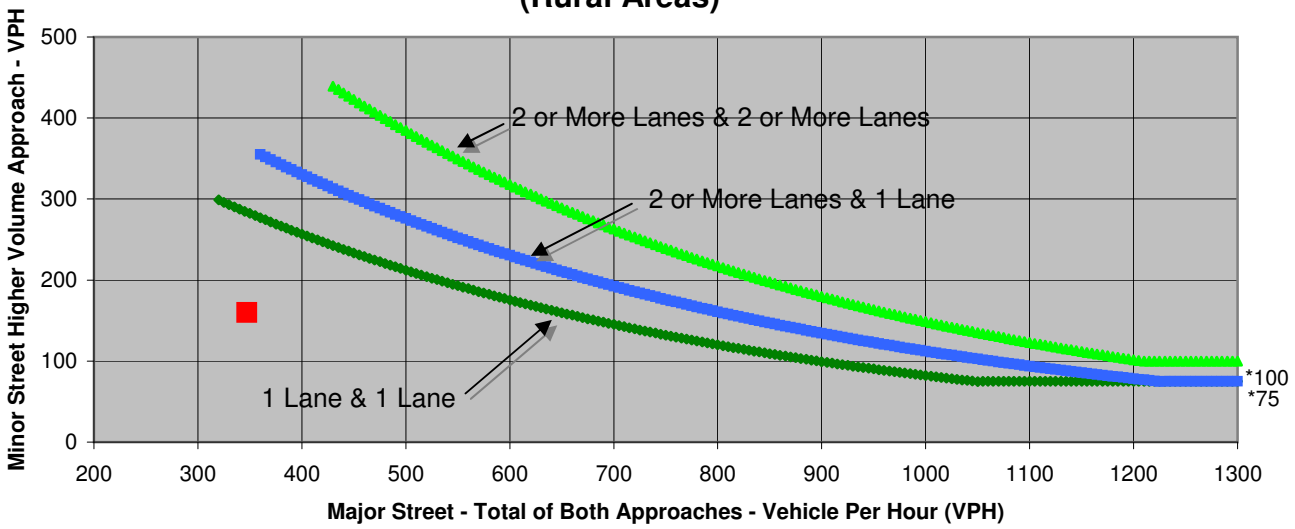

* Note: 100 VPH APPLIES AS THE LOWER THRESHOLD VOLUME FOR A MINOR STREET APPROACH WITH TWO OR MORE LANES AND 75 VPH APPLIES AS THE LOWER THRESHOLD VOLUME FOR A MINOR STREET APPROACHING WITH ONE LANE.

Source: *California Manual on Uniform Traffic Control Devices*, Caltrans, 2006

	Major Street	Minor Street	Warrant Met
	Corral Hollow Rd	Larch Rd	
Number of Approach Lanes	1	1	NO
Traffic Volume (VPH) *	347	160	

* Note: Traffic Volume for Major Street is Total Volume of Both Approches.
Traffic Volume for Minor Street is the Volume of High Volume Approach.

FEHR & PEERS
TRANSPORTATION CONSULTANTS

Sheet No	2	of	10

Project	Holly Sugar Sports Park EIR
Scenario	Near Term Plus Project Conditions
Peak Hour	SAT

Major Street	Corral Hollow Rd
Minor Street	Larch Rd

Turn Movement Volumes

	NB	SB	EB	WB
Left	20	125	20	90
Through	153	104	40	20
Right	70	10	50	330
Total	243	239	110	440

Major Street Direction

x	North/South
	East/West

Figure 4C-4
Warrant 3, Peak Hour (70% Factor)
(Rural Areas)

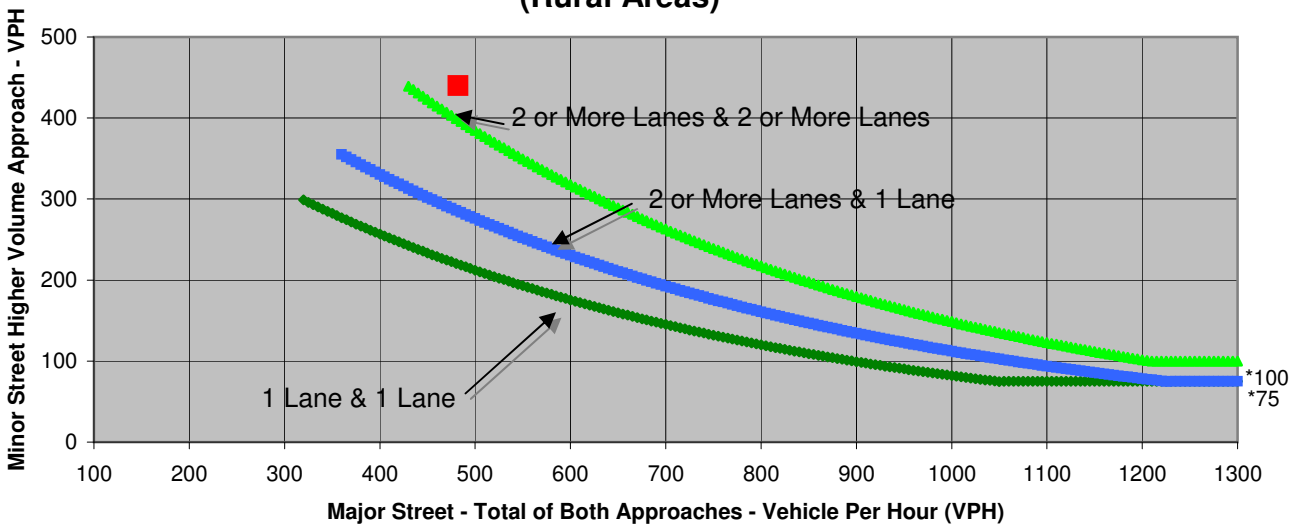

* Note: 100 VPH APPLIES AS THE LOWER THRESHOLD VOLUME FOR A MINOR STREET APPROACH WITH TWO OR MORE LANES AND 75 VPH APPLIES AS THE LOWER THRESHOLD VOLUME FOR A MINOR STREET APPROACHING WITH ONE LANE.

Source: *California Manual on Uniform Traffic Control Devices*, Caltrans, 2006

	Major Street	Minor Street	Warrant Met
	Corral Hollow Rd	Larch Rd	
Number of Approach Lanes	1	1	YES
Traffic Volume (VPH) *	482	440	

* Note: Traffic Volume for Major Street is Total Volume of Both Approches.
Traffic Volume for Minor Street is the Volume of High Volume Approach.

FEHR & PEERS
TRANSPORTATION CONSULTANTS

Sheet No	3	of	10

Project	Holly Sugar Sports Park EIR
Scenario	Near Term Plus Project Conditions
Peak Hour	PM

Major Street	Tracy Blvd
Minor Street	Larch Rd

Turn Movement Volumes

	NB	SB	EB	WB
Left	77	23	10	160
Through	275	147	80	70
Right	120	10	74	50
Total	472	180	164	280

Major Street Direction

x	North/South
	East/West

Figure 4C-4
Warrant 3, Peak Hour (70% Factor)
(Rural Areas)

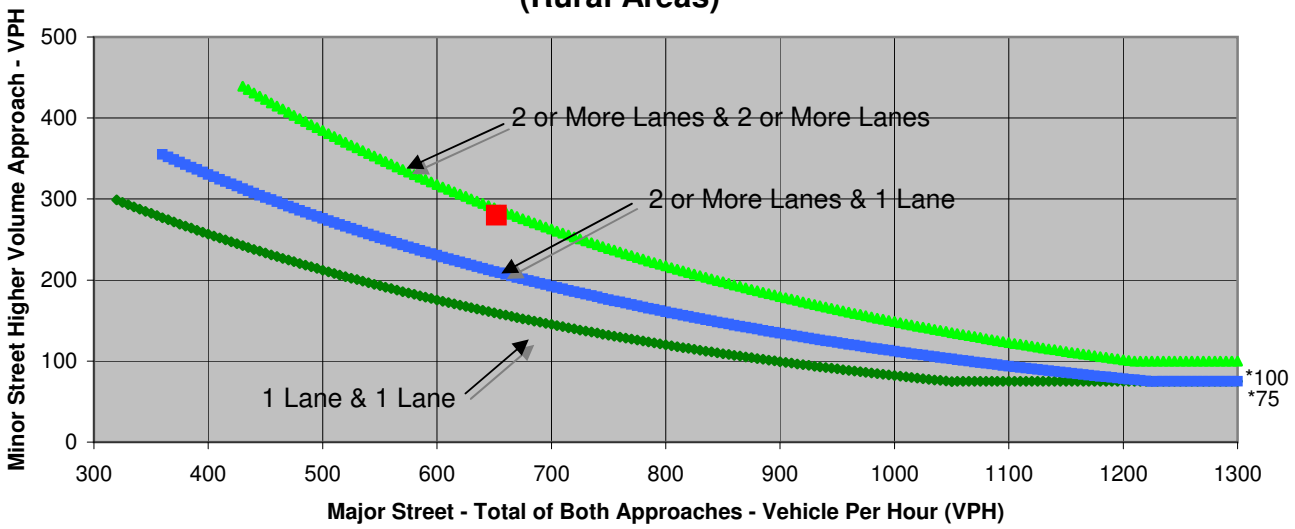

* Note: 100 VPH APPLIES AS THE LOWER THRESHOLD VOLUME FOR A MINOR STREET APPROACH WITH TWO OR MORE LANES AND 75 VPH APPLIES AS THE LOWER THRESHOLD VOLUME FOR A MINOR STREET APPROACHING WITH ONE LANE.

Source: *California Manual on Uniform Traffic Control Devices*, Caltrans, 2006

	Major Street	Minor Street	Warrant Met
	Tracy Blvd	Larch Rd	
Number of Approach Lanes	2	1	YES
Traffic Volume (VPH) *	652	280	

* Note: Traffic Volume for Major Street is Total Volume of Both Approches.
Traffic Volume for Minor Street is the Volume of High Volume Approach.

FEHR & PEERS
TRANSPORTATION CONSULTANTS

Sheet No	4	of	10

Project	Holly Sugar Sports Park EIR
Scenario	Near Term Plus Project Conditions
Peak Hour	SAT

Major Street	Tracy Blvd
Minor Street	Larch Rd

Turn Movement Volumes

	NB	SB	EB	WB
Left	390	42	10	100
Through	928	422	50	50
Right	70	10	185	77
Total	1,388	474	245	227

Major Street Direction

x	North/South
	East/West

Figure 4C-4
Warrant 3, Peak Hour (70% Factor)
(Rural Areas)

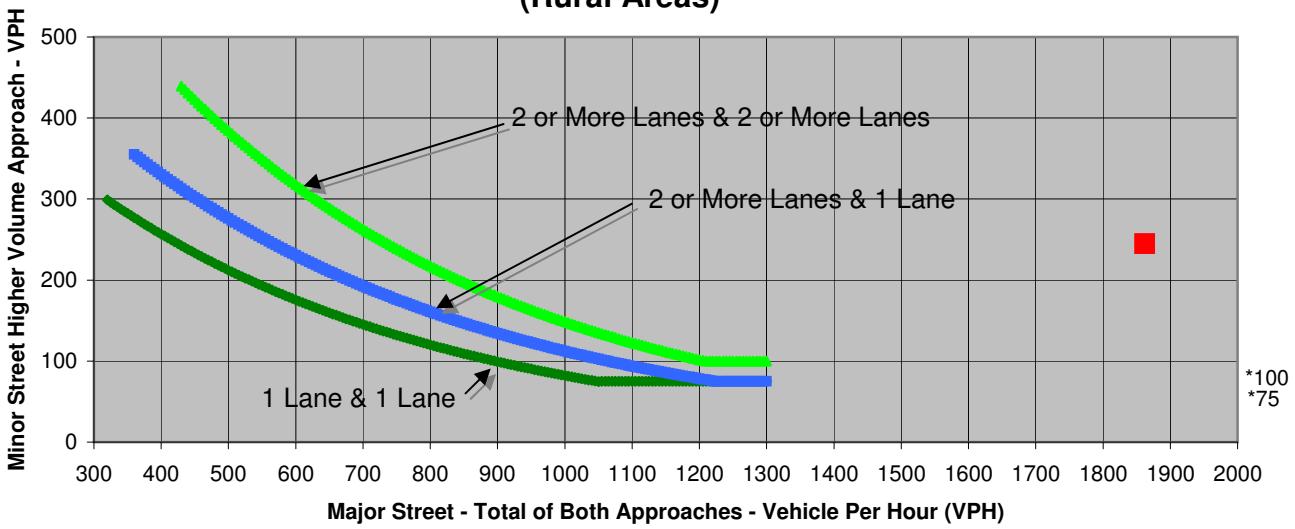

* Note: 100 VPH APPLIES AS THE LOWER THRESHOLD VOLUME FOR A MINOR STREET APPROACH WITH TWO OR MORE LANES AND 75 VPH APPLIES AS THE LOWER THRESHOLD VOLUME FOR A MINOR STREET APPROACHING WITH ONE LANE.

Source: *California Manual on Uniform Traffic Control Devices*, Caltrans, 2006

	Major Street	Minor Street	Warrant Met
	Tracy Blvd	Larch Rd	
Number of Approach Lanes	2	1	YES
Traffic Volume (VPH) *	1,862	245	

* Note: Traffic Volume for Major Street is Total Volume of Both Approches.
Traffic Volume for Minor Street is the Volume of High Volume Approach.

FEHR & PEERS
TRANSPORTATION CONSULTANTS

Sheet No	5	of	10

Project	Holly Sugar Sports Park EIR
Scenario	Near Term Plus Project Conditions
Peak Hour	PM

Major Street	Holly Dr
Minor Street	Larch Rd

Turn Movement Volumes

	NB	SB	EB	WB
Left	80	10	80	10
Through	30	40	10	10
Right	10	50	103	10
Total	120	100	193	30

Major Street Direction

x	North/South
	East/West

Figure 4C-4
Warrant 3, Peak Hour (70% Factor)
(Rural Areas)

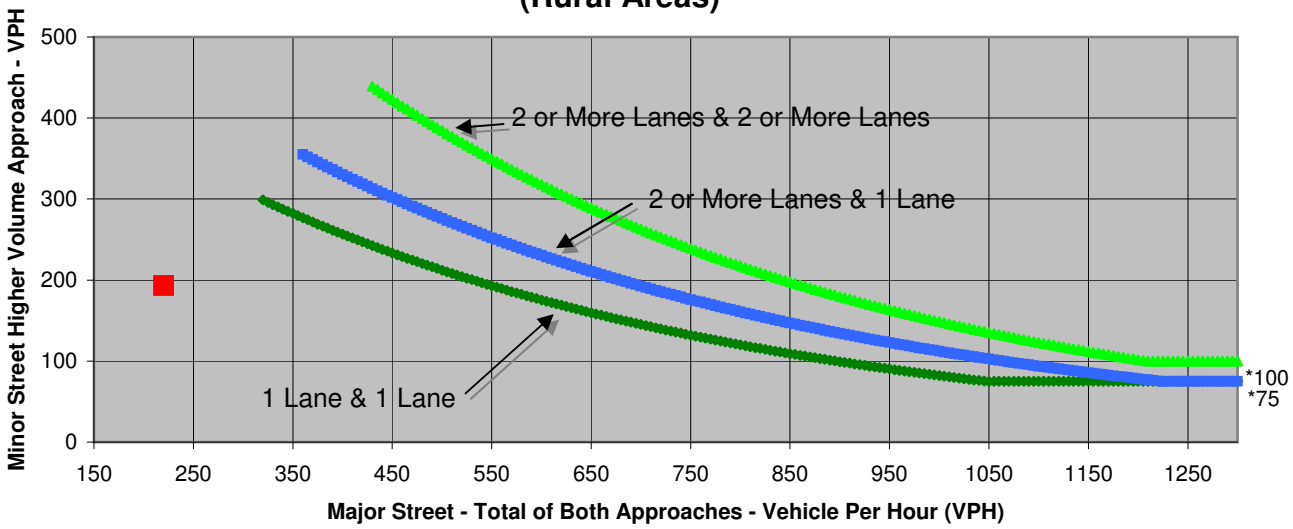

* Note: 100 VPH APPLIES AS THE LOWER THRESHOLD VOLUME FOR A MINOR STREET APPROACH WITH TWO OR MORE LANES AND 75 VPH APPLIES AS THE LOWER THRESHOLD VOLUME FOR A MINOR STREET APPROACHING WITH ONE LANE.

Source: *California Manual on Uniform Traffic Control Devices*, Caltrans, 2006

	Major Street	Minor Street	Warrant Met
	Holly Dr	Larch Rd	
Number of Approach Lanes	1	1	NO
Traffic Volume (VPH) *	220	193	

* Note: Traffic Volume for Major Street is Total Volume of Both Approches.
Traffic Volume for Minor Street is the Volume of High Volume Approach.

FEHR & PEERS
TRANSPORTATION CONSULTANTS

Sheet No	6	of	10

Project	Holly Sugar Sports Park EIR
Scenario	Near-Term Plus Project Conditions
Peak Hour	SAT

Major Street	Holly Dr
Minor Street	Larch Rd

Turn Movement Volumes

	NB	SB	EB	WB
Left	107	10	40	10
Through	30	40	10	10
Right	10	20	82	10
Total	147	70	132	30

Major Street Direction

x	North/South
	East/West

Figure 4C-4
Warrant 3, Peak Hour (70% Factor)
(Rural Areas)

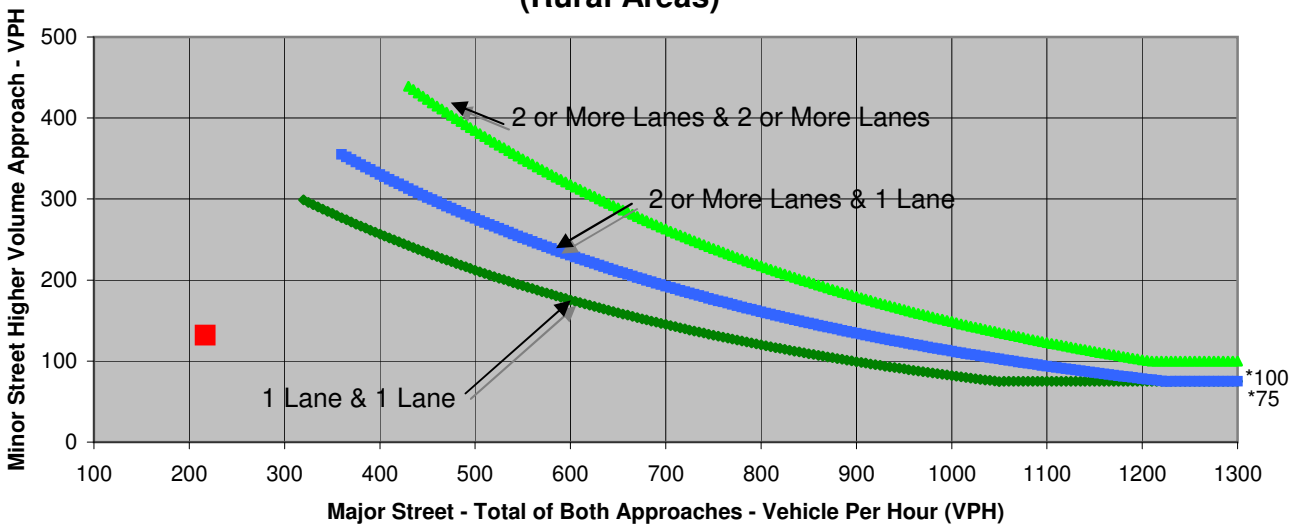

* Note: 100 VPH APPLIES AS THE LOWER THRESHOLD VOLUME FOR A MINOR STREET APPROACH WITH TWO OR MORE LANES AND 75 VPH APPLIES AS THE LOWER THRESHOLD VOLUME FOR A MINOR STREET APPROACHING WITH ONE LANE.

Source: *California Manual on Uniform Traffic Control Devices*, Caltrans, 2006

	Major Street	Minor Street	Warrant Met
	Holly Dr	Larch Rd	
Number of Approach Lanes	1	1	NO
Traffic Volume (VPH) *	217	132	

* Note: Traffic Volume for Major Street is Total Volume of Both Approches.
Traffic Volume for Minor Street is the Volume of High Volume Approach.

FEHR & PEERS
TRANSPORTATION CONSULTANTS

Sheet No	7	of	10

Project	Holly Sugar Sports Park EIR
Scenario	Near Term Plus Project Conditions
Peak Hour	PM

Major Street	Corral Hollow Rd
Minor Street	Tracy Blvd

Turn Movement Volumes

	NB	SB	EB	WB
Left	155			
Through	180	110		
Right			71	
Total	335	110	71	0

Major Street Direction

x	North/South
	East/West

Figure 4C-4
Warrant 3, Peak Hour (70% Factor)
(Rural Areas)

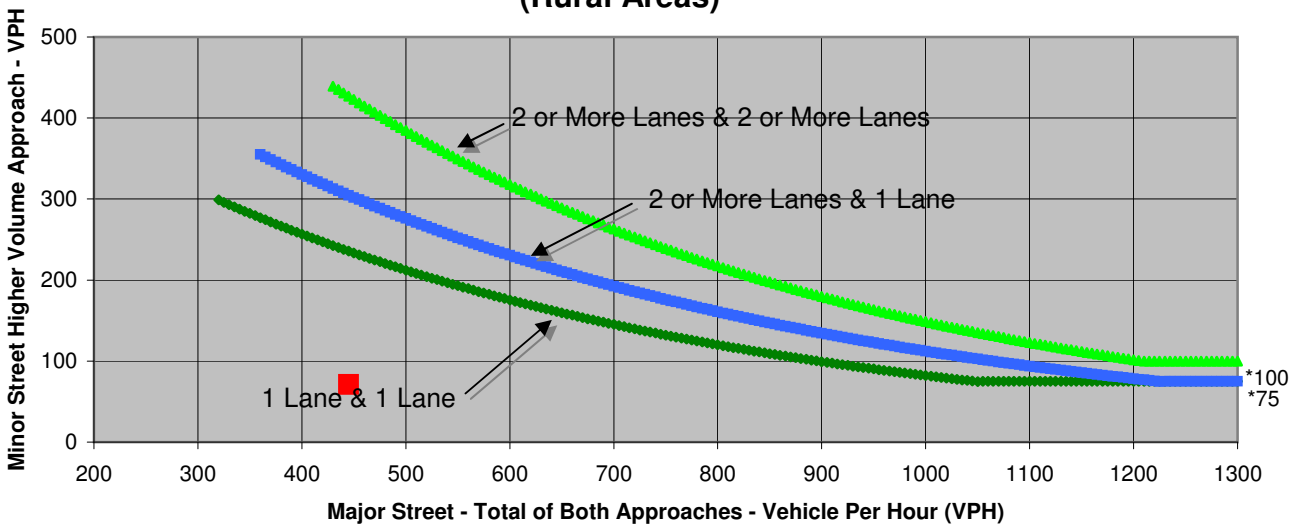

* Note: 100 VPH APPLIES AS THE LOWER THRESHOLD VOLUME FOR A MINOR STREET APPROACH WITH TWO OR MORE LANES AND 75 VPH APPLIES AS THE LOWER THRESHOLD VOLUME FOR A MINOR STREET APPROACHING WITH ONE LANE.

Source: *California Manual on Uniform Traffic Control Devices*, Caltrans, 2006

	Major Street	Minor Street	Warrant Met
	Corral Hollow Rd	Tracy Blvd	
Number of Approach Lanes	1	1	NO
Traffic Volume (VPH) *	445	71	

* Note: Traffic Volume for Major Street is Total Volume of Both Approches.
Traffic Volume for Minor Street is the Volume of High Volume Approach.

FEHR & PEERS
TRANSPORTATION CONSULTANTS

Sheet No	8	of	10

Project	Holly Sugar Sports Park EIR
Scenario	Near Term Plus Project Conditions
Peak Hour	SAT

Major Street	Tracy Blvd
Minor Street	Project Driveway

Turn Movement Volumes

	NB	SB	EB	WB
Left	875		0	
Through	140	110		
Right		0	364	
Total	1,015	110	364	0

Major Street Direction

x	North/South
	East/West

Figure 4C-4
Warrant 3, Peak Hour (70% Factor)
(Rural Areas)

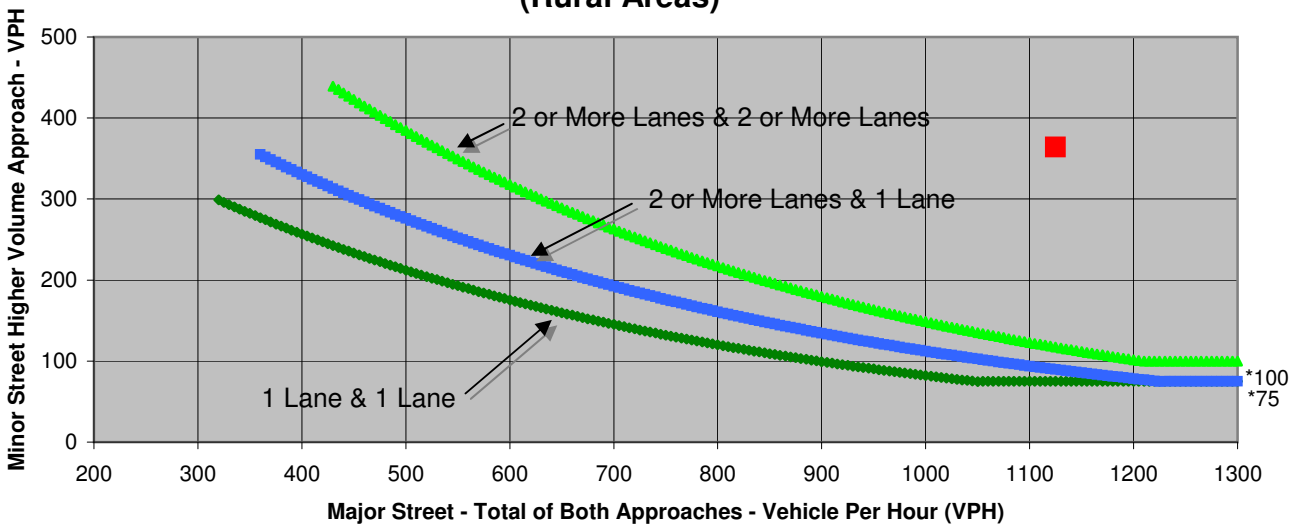

* Note: 100 VPH APPLIES AS THE LOWER THRESHOLD VOLUME FOR A MINOR STREET APPROACH WITH TWO OR MORE LANES AND 75 VPH APPLIES AS THE LOWER THRESHOLD VOLUME FOR A MINOR STREET APPROACHING WITH ONE LANE.

Source: *California Manual on Uniform Traffic Control Devices*, Caltrans, 2006

	Major Street	Minor Street	Warrant Met
	Tracy Blvd	Project Driveway	
Number of Approach Lanes	1	1	YES
Traffic Volume (VPH) *	1,125	364	

* Note: Traffic Volume for Major Street is Total Volume of Both Approches.
Traffic Volume for Minor Street is the Volume of High Volume Approach.

FEHR & PEERS
TRANSPORTATION CONSULTANTS

Sheet No	9	of	10

Project	Holly Sugar Sports Park EIR
Scenario	Near Term Plus Project Conditions
Peak Hour	PM

Major Street	Corral Hollow Rd
Minor Street	Project Driveway

Turn Movement Volumes

	NB	SB	EB	WB
Left				26
Through	140	60		
Right	58			
Total	198	60	0	26

Major Street Direction

x	North/South
	East/West

Figure 4C-4
Warrant 3, Peak Hour (70% Factor)
(Rural Areas)

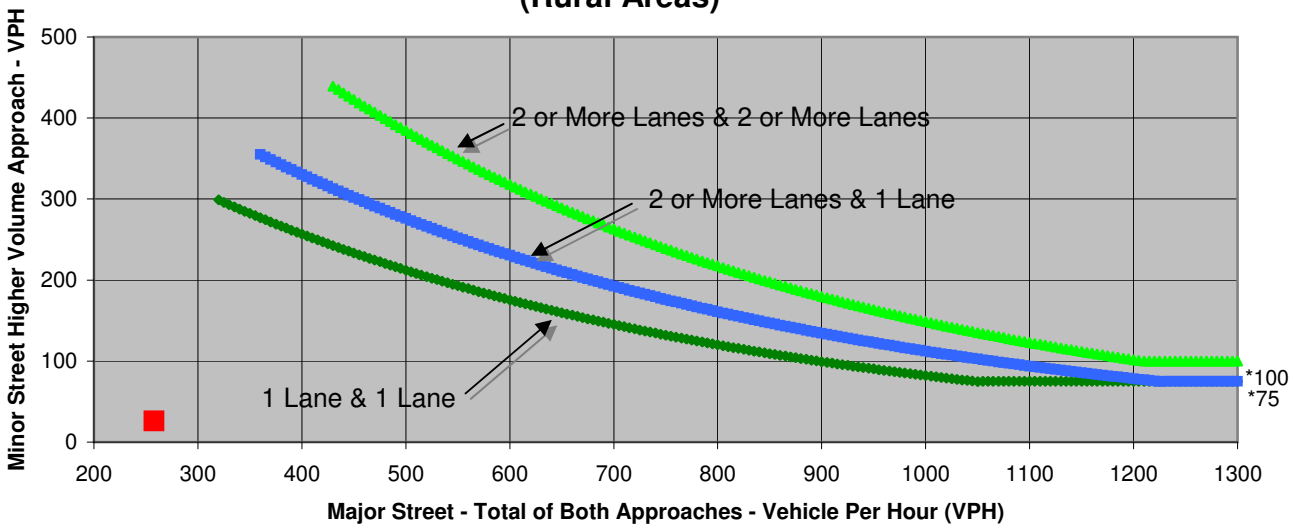

* Note: 100 VPH APPLIES AS THE LOWER THRESHOLD VOLUME FOR A MINOR STREET APPROACH WITH TWO OR MORE LANES AND 75 VPH APPLIES AS THE LOWER THRESHOLD VOLUME FOR A MINOR STREET APPROACHING WITH ONE LANE.

Source: *California Manual on Uniform Traffic Control Devices*, Caltrans, 2006

	Major Street	Minor Street	Warrant Met
	Corral Hollow Rd	Project Driveway	
Number of Approach Lanes	1	1	NO
Traffic Volume (VPH) *	258	26	

* Note: Traffic Volume for Major Street is Total Volume of Both Approches.
Traffic Volume for Minor Street is the Volume of High Volume Approach.

FEHR & PEERS
TRANSPORTATION CONSULTANTS

Sheet No	10	of	10

Project	Holly Sugar Sports Park EIR
Scenario	Near Term Plus Project Conditions
Peak Hour	SAT

Major Street	Corral Hollow Rd
Minor Street	Project Driveway

Turn Movement Volumes

	NB	SB	EB	WB
Left				168
Through	90	70		
Right	413			
Total	503	70	0	168

Major Street Direction

x	North/South
	East/West

Figure 4C-4
Warrant 3, Peak Hour (70% Factor)
(Rural Areas)

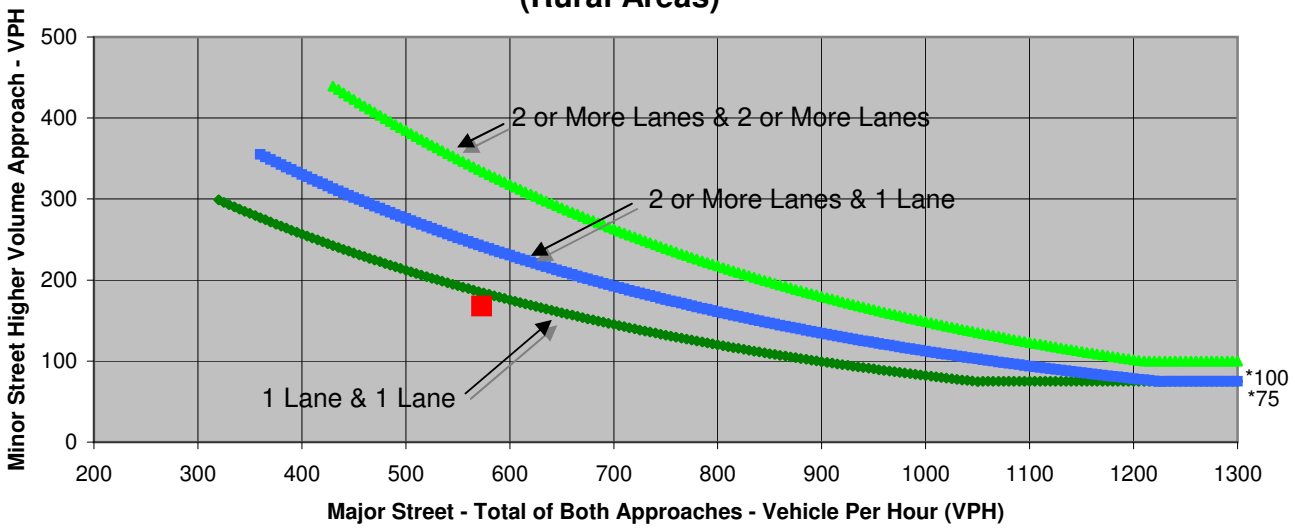

* Note: 100 VPH APPLIES AS THE LOWER THRESHOLD VOLUME FOR A MINOR STREET APPROACH WITH TWO OR MORE LANES AND 75 VPH APPLIES AS THE LOWER THRESHOLD VOLUME FOR A MINOR STREET APPROACHING WITH ONE LANE.

Source: *California Manual on Uniform Traffic Control Devices*, Caltrans, 2006

	Major Street	Minor Street	Warrant Met
	Corral Hollow Rd	Project Driveway	
Number of Approach Lanes	1	1	NO
Traffic Volume (VPH) *	573	168	

* Note: Traffic Volume for Major Street is Total Volume of Both Approches.
Traffic Volume for Minor Street is the Volume of High Volume Approach.

FEHR & PEERS
TRANSPORTATION CONSULTANTS

Sheet No	1	of	6

Project	Holly Sugar Sports Park EIR
Scenario	Cumulative Conditions
Peak Hour	PM

Major Street	Corral Hollow Rd
Minor Street	Larch Rd

Turn Movement Volumes

	NB	SB	EB	WB
Left	690	10	30	180
Through	90	40	1,040	410
Right	430	10	740	40
Total	1,210	60	1,810	630

Major Street Direction

x	North/South
	East/West

Figure 4C-3
Warrant 3, Peak Hour
(Urban Areas)

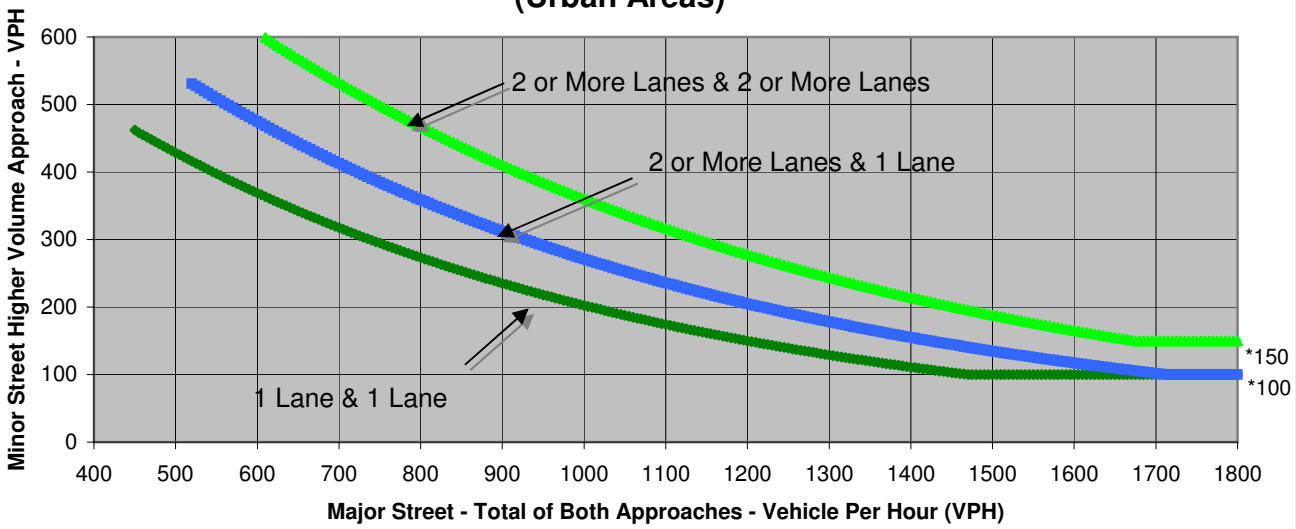

* Note: 150 VPH APPLIES AS THE LOWER THRESHOLD VOLUME FOR A MINOR STREET APPROACH WITH TWO OR MORE LANES AND 100 VPH APPLIES AS THE LOWER THRESHOLD VOLUME FOR A MINOR STREET APPROACHING WITH ONE LANE.

Source: *California Manual on Uniform Traffic Control Devices*, Caltrans, 2006

	Major Street	Minor Street	Warrant Met
	Corral Hollow Rd	Larch Rd	
Number of Approach Lanes	1	1	YES
Traffic Volume (VPH) *	1,270	1,810	

* Note: Traffic Volume for Major Street is Total Volume of Both Approches.
Traffic Volume for Minor Street is the Volume of High Volume Approach.

FEHR & PEERS
TRANSPORTATION CONSULTANTS

Sheet No	2	of	6

Project	Holly Sugar Sports Park EIR
Scenario	Cumulative Conditions
Peak Hour	SAT

Major Street	Corral Hollow Rd
Minor Street	Larch Rd

Turn Movement Volumes

	NB	SB	EB	WB
Left	660	20	30	210
Through	80	50	1,020	390
Right	410	10	700	160
Total	1,150	80	1,750	760

Major Street Direction

x	North/South
	East/West

Figure 4C-3
Warrant 3, Peak Hour
(Urban Areas)

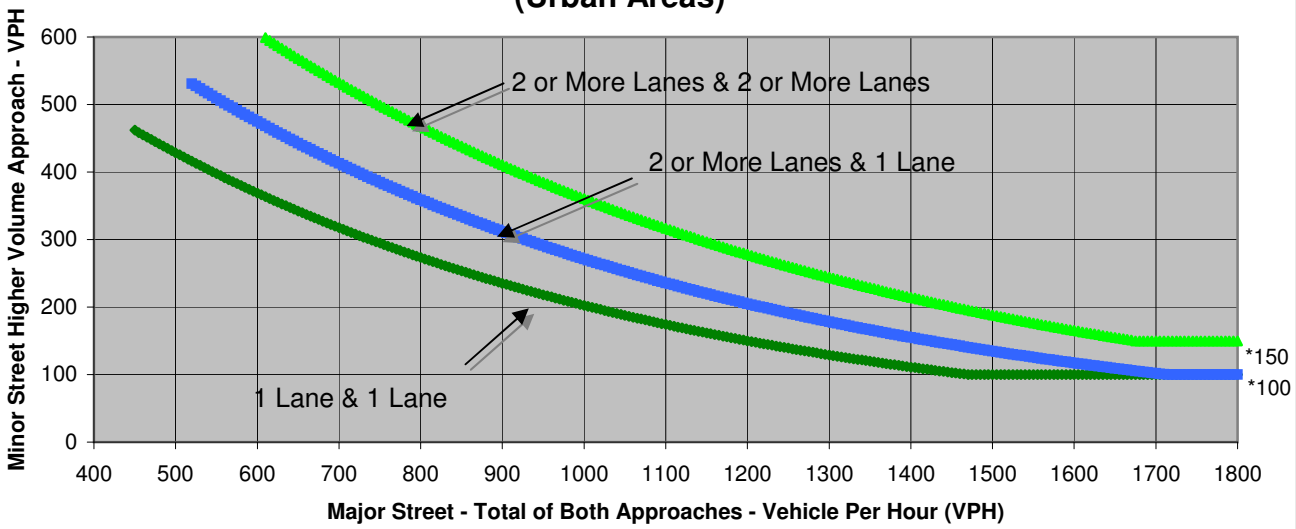

* Note: 150 VPH APPLIES AS THE LOWER THRESHOLD VOLUME FOR A MINOR STREET APPROACH WITH TWO OR MORE LANES AND 100 VPH APPLIES AS THE LOWER THRESHOLD VOLUME FOR A MINOR STREET APPROACHING WITH ONE LANE.

Source: *California Manual on Uniform Traffic Control Devices*, Caltrans, 2006

	Major Street	Minor Street	Warrant Met
	Corral Hollow Rd	Larch Rd	
Number of Approach Lanes	1	1	YES
Traffic Volume (VPH) *	1,230	1,750	

* Note: Traffic Volume for Major Street is Total Volume of Both Approches.
Traffic Volume for Minor Street is the Volume of High Volume Approach.

FEHR & PEERS
TRANSPORTATION CONSULTANTS

Sheet No	3	of	6

Project	Holly Sugar Sports Park EIR
Scenario	Cumulative Conditions
Peak Hour	PM

Major Street	Tracy Blvd
Minor Street	Larch Rd

Turn Movement Volumes

	NB	SB	EB	WB
Left	480	10	10	220
Through	190	100	630	140
Right	140	10	840	20
Total	810	120	1,480	380

Major Street Direction

x	North/South
	East/West

Figure 4C-3
Warrant 3, Peak Hour
(Urban Areas)

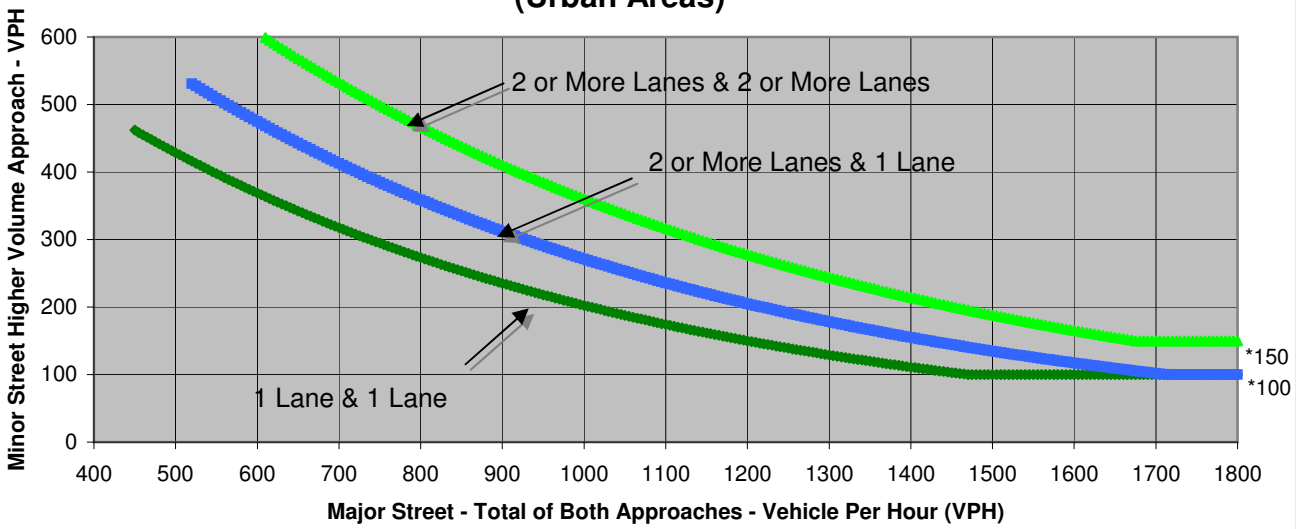

* Note: 150 VPH APPLIES AS THE LOWER THRESHOLD VOLUME FOR A MINOR STREET APPROACH WITH TWO OR MORE LANES AND 100 VPH APPLIES AS THE LOWER THRESHOLD VOLUME FOR A MINOR STREET APPROACHING WITH ONE LANE.

Source: *California Manual on Uniform Traffic Control Devices*, Caltrans, 2006

	Major Street	Minor Street	Warrant Met
	Tracy Blvd	Larch Rd	
Number of Approach Lanes	2	1	YES
Traffic Volume (VPH) *	930	1,480	

* Note: Traffic Volume for Major Street is Total Volume of Both Approches.
Traffic Volume for Minor Street is the Volume of High Volume Approach.

FEHR & PEERS
TRANSPORTATION CONSULTANTS

Sheet No	4	of	6

Project	Holly Sugar Sports Park EIR
Scenario	Cumulative Conditions
Peak Hour	SAT

Major Street	Tracy Blvd
Minor Street	Larch Rd

Turn Movement Volumes

	NB	SB	EB	WB
Left	630	10	10	160
Through	330	110	600	120
Right	100	10	850	20
Total	1,060	130	1,460	300

Major Street Direction

x	North/South
	East/West

Figure 4C-3
Warrant 3, Peak Hour
(Urban Areas)

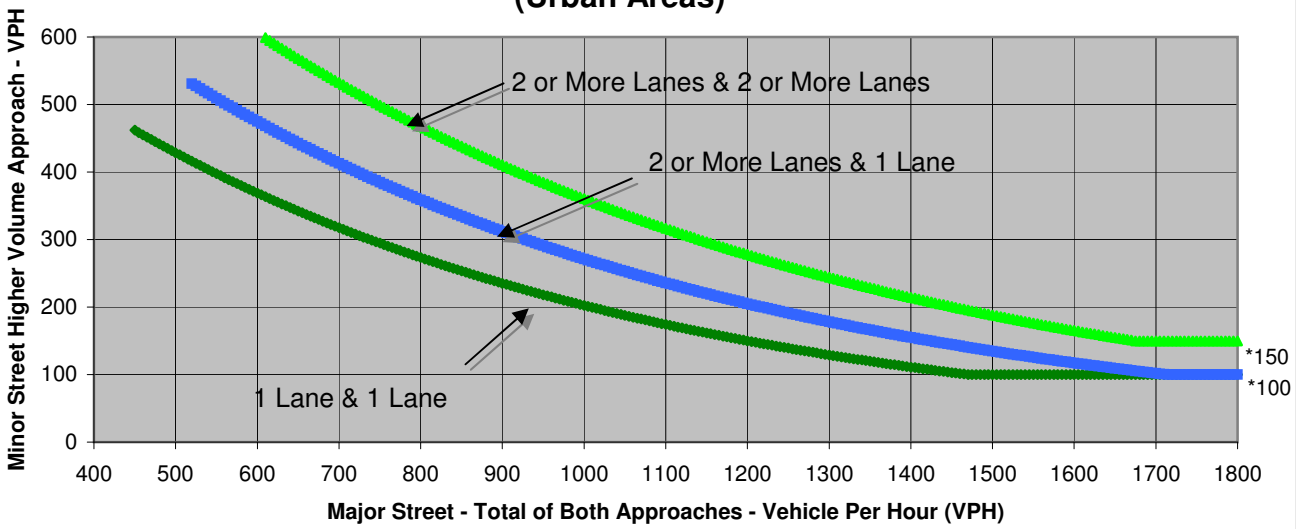

* Note: 150 VPH APPLIES AS THE LOWER THRESHOLD VOLUME FOR A MINOR STREET APPROACH WITH TWO OR MORE LANES AND 100 VPH APPLIES AS THE LOWER THRESHOLD VOLUME FOR A MINOR STREET APPROACHING WITH ONE LANE.

Source: *California Manual on Uniform Traffic Control Devices*, Caltrans, 2006

	Major Street	Minor Street	Warrant Met
	Tracy Blvd	Larch Rd	
Number of Approach Lanes	2	1	YES
Traffic Volume (VPH) *	1,190	1,460	

* Note: Traffic Volume for Major Street is Total Volume of Both Approches.
Traffic Volume for Minor Street is the Volume of High Volume Approach.

FEHR & PEERS
TRANSPORTATION CONSULTANTS

Sheet No	6	of	6

Project	Holly Sugar Sports Park EIR
Scenario	Cumulative Conditions
Peak Hour	PM

Major Street	Holly Dr
Minor Street	Larch Rd

Turn Movement Volumes

	NB	SB	EB	WB
Left	110	10	410	10
Through	40	40	10	10
Right	10	50	350	10
Total	160	100	770	30

Major Street Direction

x	North/South
	East/West

Figure 4C-3
Warrant 3, Peak Hour
(Urban Areas)

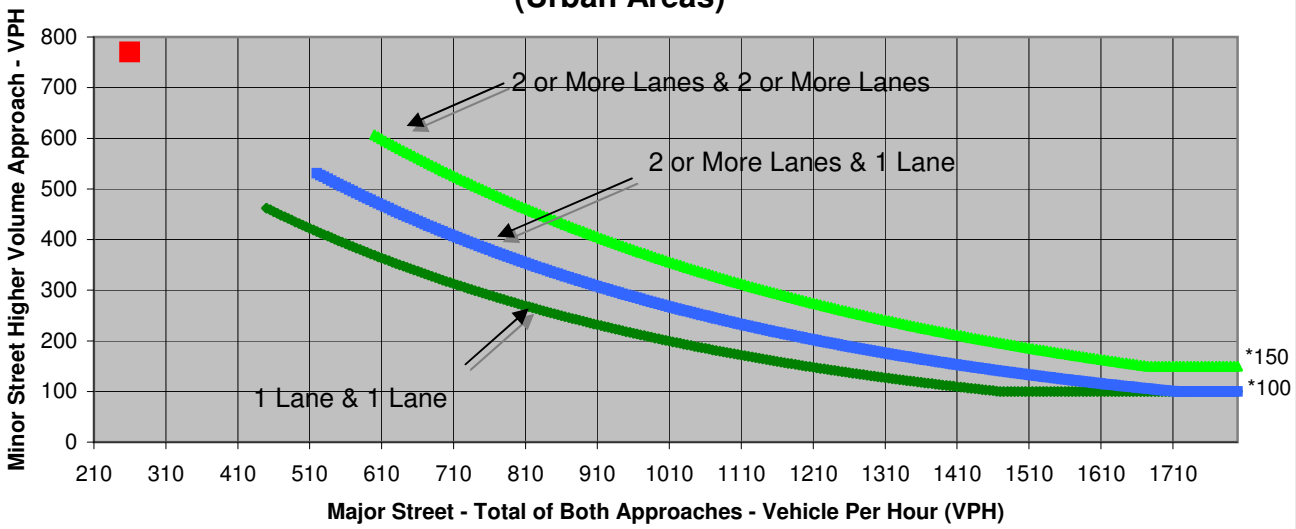

* Note: 150 VPH APPLIES AS THE LOWER THRESHOLD VOLUME FOR A MINOR STREET APPROACH WITH TWO OR MORE LANES AND 100 VPH APPLIES AS THE LOWER THRESHOLD VOLUME FOR A MINOR STREET APPROACHING WITH ONE LANE.

Source: *California Manual on Uniform Traffic Control Devices*, Caltrans, 2006

	Major Street	Minor Street	Warrant Met
	Holly Dr	Larch Rd	
Number of Approach Lanes	1	1	YES
Traffic Volume (VPH) *	260	770	

* Note: Traffic Volume for Major Street is Total Volume of Both Approches.
Traffic Volume for Minor Street is the Volume of High Volume Approach.

FEHR & PEERS
TRANSPORTATION CONSULTANTS

Sheet No	6	of	6

Project	Holly Sugar Sports Park EIR
Scenario	Cumulative Conditions
Peak Hour	SAT

Major Street	Holly Dr
Minor Street	Larch Rd

Turn Movement Volumes

	NB	SB	EB	WB
Left	110	10	370	10
Through	40	40	10	10
Right	10	20	310	10
Total	160	70	690	30

Major Street Direction

x	North/South
	East/West

Figure 4C-3
Warrant 3, Peak Hour
(Urban Areas)

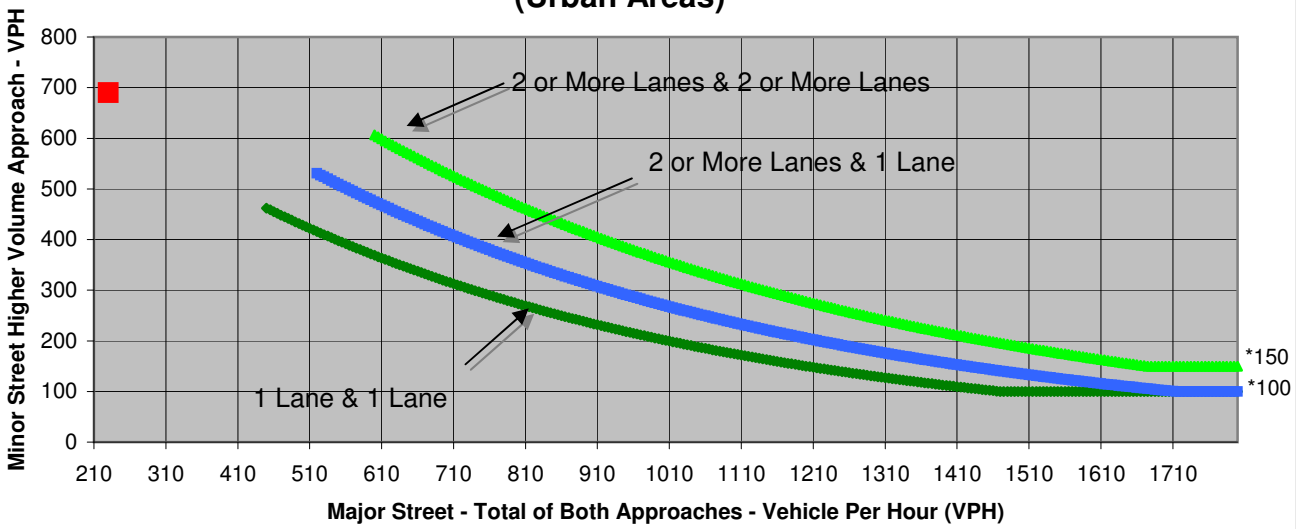

* Note: 150 VPH APPLIES AS THE LOWER THRESHOLD VOLUME FOR A MINOR STREET APPROACH WITH TWO OR MORE LANES AND 100 VPH APPLIES AS THE LOWER THRESHOLD VOLUME FOR A MINOR STREET APPROACHING WITH ONE LANE.

Source: *California Manual on Uniform Traffic Control Devices*, Caltrans, 2006

	Major Street	Minor Street	Warrant Met
	Holly Dr	Larch Rd	
Number of Approach Lanes	1	1	YES
Traffic Volume (VPH) *	230	690	

* Note: Traffic Volume for Major Street is Total Volume of Both Approches.
Traffic Volume for Minor Street is the Volume of High Volume Approach.

FEHR & PEERS
TRANSPORTATION CONSULTANTS

Sheet No	1	of	4

Project	Holly Sugar Sports Park EIR
Scenario	Cumulative Plus Project Conditions
Peak Hour	PM

Major Street	Tracy Blvd
Minor Street	Project Driveway

Turn Movement Volumes

	NB	SB	EB	WB
Left	248			
Through	220	120		
Right			184	
Total	468	120	184	0

Major Street Direction

x	North/South
	East/West

Figure 4C-3
Warrant 3, Peak Hour
(Urban Areas)

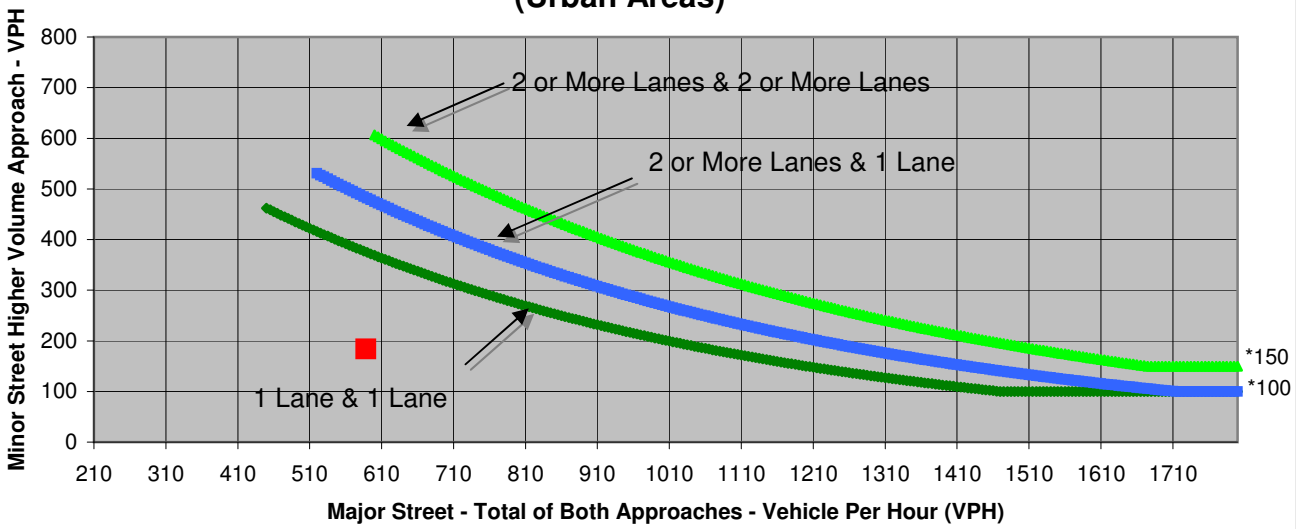

* Note: 150 VPH APPLIES AS THE LOWER THRESHOLD VOLUME FOR A MINOR STREET APPROACH WITH TWO OR MORE LANES AND 100 VPH APPLIES AS THE LOWER THRESHOLD VOLUME FOR A MINOR STREET APPROACHING WITH ONE LANE.

Source: *California Manual on Uniform Traffic Control Devices*, Caltrans, 2006

	Major Street	Minor Street	Warrant Met
	Tracy Blvd	Project Driveway	
Number of Approach Lanes	1	1	NO
Traffic Volume (VPH) *	588	184	

* Note: Traffic Volume for Major Street is Total Volume of Both Approches.
Traffic Volume for Minor Street is the Volume of High Volume Approach.

FEHR & PEERS
TRANSPORTATION CONSULTANTS

Sheet No	2	of	4

Project	Holly Sugar Sports Park EIR
Scenario	Cumulative Plus Project Conditions
Peak Hour	SAT

Major Street	Tracy Blvd
Minor Street	Project Driveway

Turn Movement Volumes

	NB	SB	EB	WB
Left	1,015			
Through	360	130		
Right			472	
Total	1,375	130	472	0

Major Street Direction

x	North/South
	East/West

Figure 4C-3
Warrant 3, Peak Hour
(Urban Areas)

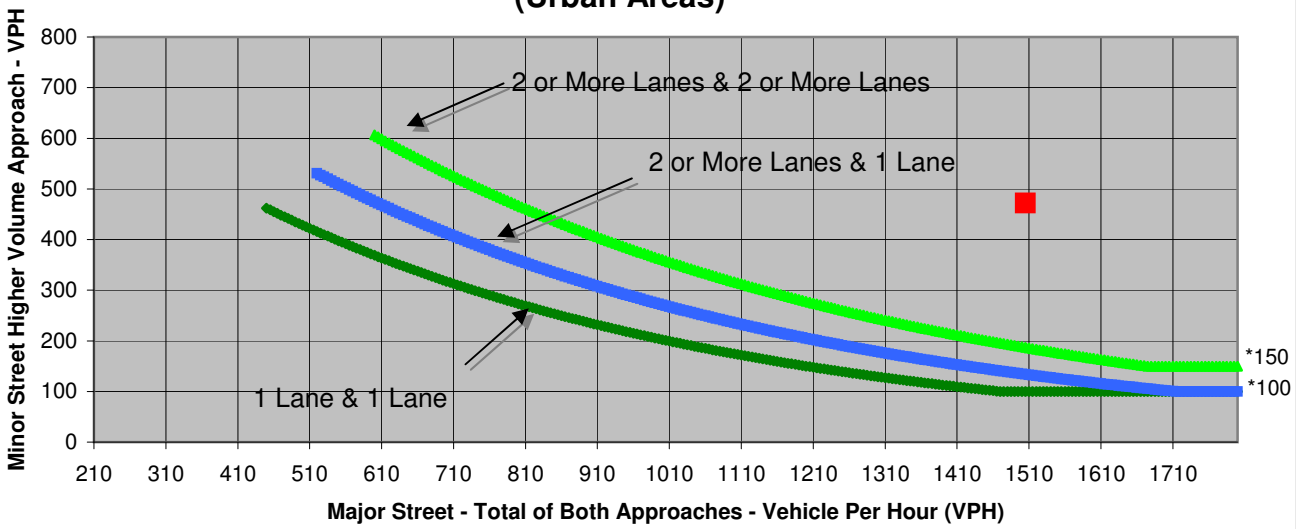

* Note: 150 VPH APPLIES AS THE LOWER THRESHOLD VOLUME FOR A MINOR STREET APPROACH WITH TWO OR MORE LANES AND 100 VPH APPLIES AS THE LOWER THRESHOLD VOLUME FOR A MINOR STREET APPROACHING WITH ONE LANE.

Source: *California Manual on Uniform Traffic Control Devices*, Caltrans, 2006

	Major Street	Minor Street	Warrant Met
	Tracy Blvd	Project Driveway	
Number of Approach Lanes	1	1	YES
Traffic Volume (VPH) *	1,505	472	

* Note: Traffic Volume for Major Street is Total Volume of Both Approches.
Traffic Volume for Minor Street is the Volume of High Volume Approach.

FEHR & PEERS
TRANSPORTATION CONSULTANTS

Sheet No	3	of	4

Project	Holly Sugar Sports Park EIR
Scenario	Cumulative Plus Project Conditions
Peak Hour	PM

Major Street	Corral Hollow Rd
Minor Street	Project Driveway

Turn Movement Volumes

	NB	SB	EB	WB
Left				69
Through	160	60		
Right	93			
Total	253	60	0	69

Major Street Direction

x	North/South
	East/West

Figure 4C-3
Warrant 3, Peak Hour
(Urban Areas)

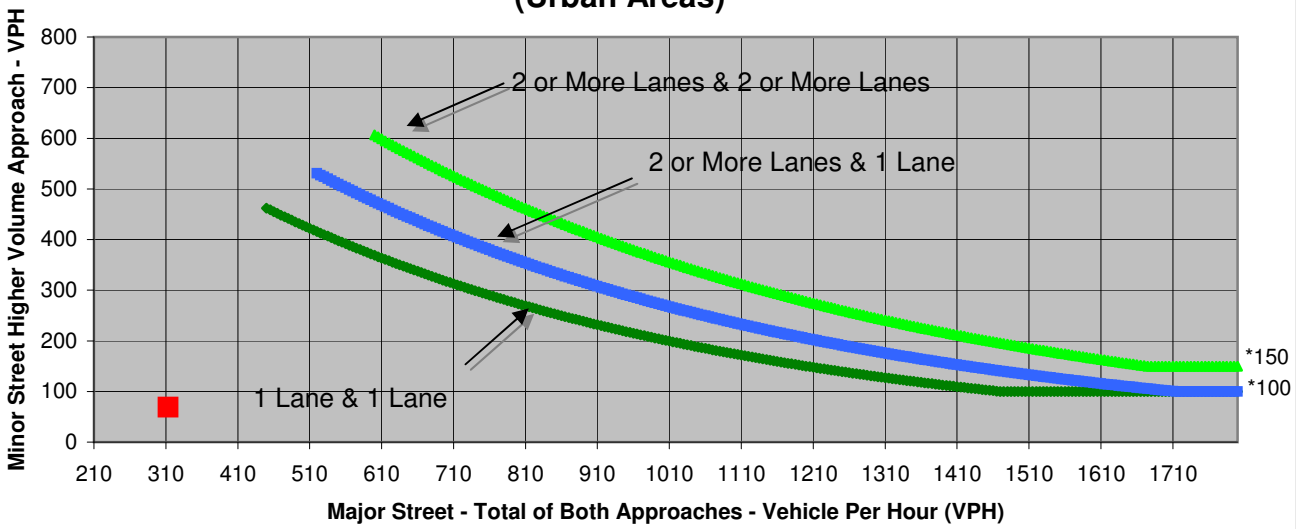

* Note: 150 VPH APPLIES AS THE LOWER THRESHOLD VOLUME FOR A MINOR STREET APPROACH WITH TWO OR MORE LANES AND 100 VPH APPLIES AS THE LOWER THRESHOLD VOLUME FOR A MINOR STREET APPROACHING WITH ONE LANE.

Source: *California Manual on Uniform Traffic Control Devices*, Caltrans, 2006

	Major Street	Minor Street	Warrant Met
	Corral Hollow Rd	Project Driveway	
Number of Approach Lanes	1	1	NO
Traffic Volume (VPH) *	313	69	

* Note: Traffic Volume for Major Street is Total Volume of Both Approches.
Traffic Volume for Minor Street is the Volume of High Volume Approach.

FEHR & PEERS
TRANSPORTATION CONSULTANTS

Sheet No	4	of	4

Project	Holly Sugar Sports Park EIR
Scenario	Cumulative Plus Project Conditions
Peak Hour	SAT

Major Street	Corral Hollow Rd
Minor Street	Project Driveway

Turn Movement Volumes

	NB	SB	EB	WB
Left				209
Through	270	80		
Right	467			
Total	737	80	0	209

Major Street Direction

x	North/South
	East/West

Figure 4C-3
Warrant 3, Peak Hour
(Urban Areas)

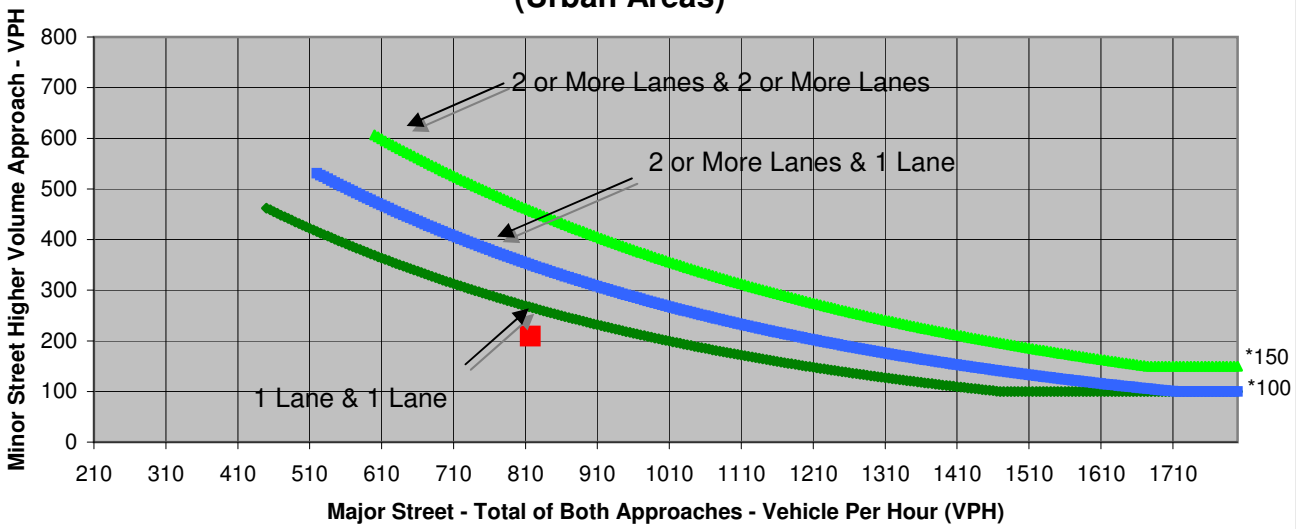

* Note: 150 VPH APPLIES AS THE LOWER THRESHOLD VOLUME FOR A MINOR STREET APPROACH WITH TWO OR MORE LANES AND 100 VPH APPLIES AS THE LOWER THRESHOLD VOLUME FOR A MINOR STREET APPROACHING WITH ONE LANE.

Source: *California Manual on Uniform Traffic Control Devices*, Caltrans, 2006

	Major Street	Minor Street	Warrant Met
	Corral Hollow Rd	Project Driveway	
Number of Approach Lanes	1	1	NO
Traffic Volume (VPH) *	817	209	

* Note: Traffic Volume for Major Street is Total Volume of Both Approches.
Traffic Volume for Minor Street is the Volume of High Volume Approach.

APPENDIX D:
FREEWAY ANALYSIS WORKSHEETS

HCM 2000
Basic Freeway Segments
Capacity Analysis

Jurisdiction Tracy
Analysis Year 2008
Analyst FJM

Agency or Company Fehr & Peers
Date 12/30/2008
Project Description Holly Sugar Sports Park EIR

General Information | *Flow Rate Calculation*

	Freeway/ Direction	From/To	Analysis Time Period	Volume (vph)	PHF	Lanes	HOV Lane?	HOV Lane Volume	Terrain	Grade %	Length (mi)	Truck/ Bus %	RV %	E_T	E_R	f_{HV}	f_P	Flow Rate v_p (pcphpl)
1	I-205 WB	East of Tracy Blvd	Weekday	2,627	0.97	2	No		Level			7.0%	0.0%	1.5	1.2	0.97	1.00	1,402
2	I-205 WB	West of Tracy Blvd	Weekday	2,362	0.97	2	No		Level			7.0%	0.0%	1.5	1.2	0.97	1.00	1,260
1	I-205 EB	East of Tracy Blvd	Weekday	3,018	0.97	2	No		Level			7.0%	0.0%	1.5	1.2	0.97	1.00	1,610
2	I-205 EB	West of Tracy Blvd	Weekday	2,867	0.97	2	No		Level			7.0%	0.0%	1.5	1.2	0.97	1.00	1,530
1	I-205 WB	East of Tracy Blvd	Saturday	3,227	0.95	2	No		Level			2.0%	0.0%	1.5	1.2	0.99	1.00	1,715
2	I-205 WB	West of Tracy Blvd	Saturday	3,088	0.95	2	No		Level			2.0%	0.0%	1.5	1.2	0.99	1.00	1,642
1	I-205 EB	East of Tracy Blvd	Saturday	2,983	0.96	2	No		Level			1.0%	0.0%	1.5	1.2	1.00	1.00	1,561
2	I-205 EB	West of Tracy Blvd	Saturday	2,865	0.96	2	No		Level			1.0%	0.0%	1.5	1.2	1.00	1.00	1,500

HCM 2000
Basic Freeway Segments
Capacity Analysis

General Information			*Speed Calculation*												*Results*	
	Freeway/ Direction	From/To	BFFS (mph)	Lane Width (ft)	f_{LW}	R. Shoulder Width (ft)	f_{LC}	f_N	IC Density (per mi)	f_{ID}	Calculated FFS (mph)	Measured FFS (mph)	FFS (mph)	S (mph)	Density, D (pcplpm)	Level of Service
1	I-205 WB	East of Tracy Blvd	70	12	0	6	0	4.5	1	2.5	63.0		63.0	63.0	**22.2**	**C**
2	I-205 WB	West of Tracy Blvd	70	12	0	6	0	4.5	1	2.5	63.0		63.0	63.0	**20.0**	**C**
1	I-205 EB	East of Tracy Blvd	70	12	0	6	0	4.5	1	2.5	63.0		63.0	63.0	**25.6**	**C**
2	I-205 EB	West of Tracy Blvd	70	12	0	6	0	4.5	1	2.5	63.0		63.0	63.0	**24.3**	**C**
1	I-205 WB	East of Tracy Blvd	70	12	0	6	0	4.5	1	2.5	63.0		63.0	62.7	**27.4**	**D**
2	I-205 WB	West of Tracy Blvd	70	12	0	6	0	4.5	1	2.5	63.0		63.0	62.9	**26.1**	**D**
1	I-205 EB	East of Tracy Blvd	70	12	0	6	0	4.5	1	2.5	63.0		63.0	63.0	**24.8**	**C**
2	I-205 EB	West of Tracy Blvd	70	12	0	6	0	4.5	1	2.5	63.0		63.0	63.0	**23.8**	**C**

HCM 2000
Basic Freeway Segments
Capacity Analysis

Jurisdiction Tracy
Analysis Year Near Term
Analyst FJM

Agency or Company Fehr & Peers
Date 5/13/2009
Project Description Holly Sugar Sports Park EIR

General Information | *Flow Rate Calculation*

	Freeway/ Direction	From/To	Analysis Time Period	Volume (vph)	PHF	Lanes	HOV Lane?	HOV Lane Volume	Terrain	Grade %	Length (mi)	Truck/ Bus %	RV %	E_T	E_R	f_{HV}	f_P	Flow Rate v_p (pcphpl)
1	I-205 WB	East of Tracy Blvd	Weekday	2,640	0.97	3	No		Level			7.0%	0.0%	1.5	1.2	0.97	1.00	939
2	I-205 WB	West of Tracy Blvd	Weekday	2,370	0.97	3	No		Level			7.0%	0.0%	1.5	1.2	0.97	1.00	843
1	I-205 EB	East of Tracy Blvd	Weekday	3,020	0.97	3	No		Level			7.0%	0.0%	1.5	1.2	0.97	1.00	1,074
2	I-205 EB	West of Tracy Blvd	Weekday	2,870	0.97	3	No		Level			7.0%	0.0%	1.5	1.2	0.97	1.00	1,021
1	I-205 WB	East of Tracy Blvd	Saturday	3,230	0.95	3	No		Level			2.0%	0.0%	1.5	1.2	0.99	1.00	1,145
2	I-205 WB	West of Tracy Blvd	Saturday	3,090	0.95	3	No		Level			2.0%	0.0%	1.5	1.2	0.99	1.00	1,095
1	I-205 EB	East of Tracy Blvd	Saturday	2,990	0.96	3	No		Level			1.0%	0.0%	1.5	1.2	1.00	1.00	1,043
2	I-205 EB	West of Tracy Blvd	Saturday	2,870	0.96	3	No		Level			1.0%	0.0%	1.5	1.2	1.00	1.00	1,002

HCM 2000
Basic Freeway Segments
Capacity Analysis

General Information			*Speed Calculation*												*Results*	
	Freeway/ Direction	From/To	BFFS (mph)	Lane Width (ft)	f_{LW}	R. Shoulder Width (ft)	f_{LC}	f_N	IC Density (per mi)	f_{ID}	Calculated FFS (mph)	Measured FFS (mph)	FFS (mph)	S (mph)	Density, D (pcplpm)	Level of Service
1	I-205 WB	East of Tracy Blvd	70	12	0	6	0	3	1	2.5	64.5		64.5	64.5	**14.6**	**B**
2	I-205 WB	West of Tracy Blvd	70	12	0	6	0	3	1	2.5	64.5		64.5	64.5	**13.1**	**B**
1	I-205 EB	East of Tracy Blvd	70	12	0	6	0	3	1	2.5	64.5		64.5	64.5	**16.7**	**B**
2	I-205 EB	West of Tracy Blvd	70	12	0	6	0	3	1	2.5	64.5		64.5	64.5	**15.8**	**B**
1	I-205 WB	East of Tracy Blvd	70	12	0	6	0	3	1	2.5	64.5		64.5	64.5	**17.7**	**B**
2	I-205 WB	West of Tracy Blvd	70	12	0	6	0	3	1	2.5	64.5		64.5	64.5	**17.0**	**B**
1	I-205 EB	East of Tracy Blvd	70	12	0	6	0	3	1	2.5	64.5		64.5	64.5	**16.2**	**B**
2	I-205 EB	West of Tracy Blvd	70	12	0	6	0	3	1	2.5	64.5		64.5	64.5	**15.5**	**B**

HCM 2000
Basic Freeway Segments
Capacity Analysis

Jurisdiction Tracy
Analysis Year Near Term Plus Project
Analyst FJM

Agency or Company Fehr & Peers
Date 5/13/2009
Project Description Holly Sugar Sports Park EIR

General Information | *Flow Rate Calculation*

	Freeway/ Direction	From/To	Analysis Time Period	Volume (vph)	PHF	Lanes	HOV Lane?	HOV Lane Volume	Terrain	Grade %	Length (mi)	Truck/ Bus %	RV %	E_T	E_R	f_{HV}	f_P	Flow Rate v_p (pcphpl)
1	I-205 WB	East of Tracy Blvd	Weekday	2,657	0.97	3	No		Level			7.0%	0.0%	1.5	1.2	0.97	1.00	945
2	I-205 WB	West of Tracy Blvd	Weekday	2,372	0.97	3	No		Level			7.0%	0.0%	1.5	1.2	0.97	1.00	844
1	I-205 EB	East of Tracy Blvd	Weekday	3,028	0.97	3	No		Level			7.0%	0.0%	1.5	1.2	0.97	1.00	1,077
2	I-205 EB	West of Tracy Blvd	Weekday	2,874	0.97	3	No		Level			7.0%	0.0%	1.5	1.2	0.97	1.00	1,022
1	I-205 WB	East of Tracy Blvd	Saturday	3,933	0.95	3	No		Level			2.0%	0.0%	1.5	1.2	0.99	1.00	1,394
2	I-205 WB	West of Tracy Blvd	Saturday	3,149	0.95	3	No		Level			2.0%	0.0%	1.5	1.2	0.99	1.00	1,116
1	I-205 EB	East of Tracy Blvd	Saturday	3,259	0.96	3	No		Level			1.0%	0.0%	1.5	1.2	1.00	1.00	1,137
2	I-205 EB	West of Tracy Blvd	Saturday	3,024	0.96	3	No		Level			1.0%	0.0%	1.5	1.2	1.00	1.00	1,055

HCM 2000
Basic Freeway Segments
Capacity Analysis

General Information			*Speed Calculation*												*Results*	
	Freeway/ Direction	From/To	BFFS (mph)	Lane Width (ft)	f_{LW}	R. Shoulder Width (ft)	f_{LC}	f_N	IC Density (per mi)	f_{ID}	Calculated FFS (mph)	Measured FFS (mph)	FFS (mph)	S (mph)	Density, D (pcplpm)	Level of Service
1	I-205 WB	East of Tracy Blvd	70	12	0	6	0	3	1	2.5	64.5		64.5	64.5	**14.7**	**B**
2	I-205 WB	West of Tracy Blvd	70	12	0	6	0	3	1	2.5	64.5		64.5	64.5	**13.1**	**B**
1	I-205 EB	East of Tracy Blvd	70	12	0	6	0	3	1	2.5	64.5		64.5	64.5	**16.7**	**B**
2	I-205 EB	West of Tracy Blvd	70	12	0	6	0	3	1	2.5	64.5		64.5	64.5	**15.8**	**B**
1	I-205 WB	East of Tracy Blvd	70	12	0	6	0	3	1	2.5	64.5		64.5	64.5	**21.6**	**C**
2	I-205 WB	West of Tracy Blvd	70	12	0	6	0	3	1	2.5	64.5		64.5	64.5	**17.3**	**B**
1	I-205 EB	East of Tracy Blvd	70	12	0	6	0	3	1	2.5	64.5		64.5	64.5	**17.6**	**B**
2	I-205 EB	West of Tracy Blvd	70	12	0	6	0	3	1	2.5	64.5		64.5	64.5	**16.4**	**B**

HCM 2000
Basic Freeway Segments
Capacity Analysis

Jurisdiction Tracy
Analysis Year Cumulative
Analyst FJM

Agency or Company Fehr & Peers
Date 5/13/2009
Project Description Holly Sugar Sports Park EIR

General Information | *Flow Rate Calculation*

	Freeway/ Direction	From/To	Analysis Time Period	Volume (vph)	PHF	Lanes	HOV Lane?	HOV Lane Volume	Terrain	Grade %	Length (mi)	Truck/ Bus %	RV %	E_T	E_R	f_{HV}	f_P	Flow Rate v_p (pcphpl)
1	I-205 WB	East of Tracy Blvd	Weekday	5,140	0.97	4	No		Level			7.0%	0.0%	1.5	1.2	0.97	1.00	1,371
2	I-205 WB	West of Tracy Blvd	Weekday	4,740	0.97	4	No		Level			7.0%	0.0%	1.5	1.2	0.97	1.00	1,264
1	I-205 EB	East of Tracy Blvd	Weekday	8,630	0.97	4	No		Level			7.0%	0.0%	1.5	1.2	0.97	1.00	2,302
2	I-205 EB	West of Tracy Blvd	Weekday	8,060	0.97	4	No		Level			7.0%	0.0%	1.5	1.2	0.97	1.00	2,150
1	I-205 WB	East of Tracy Blvd	Saturday	5,950	0.95	4	No		Level			2.0%	0.0%	1.5	1.2	0.99	1.00	1,581
2	I-205 WB	West of Tracy Blvd	Saturday	5,480	0.95	4	No		Level			2.0%	0.0%	1.5	1.2	0.99	1.00	1,457
1	I-205 EB	East of Tracy Blvd	Saturday	8,610	0.96	4	No		Level			1.0%	0.0%	1.5	1.2	1.00	1.00	2,253
2	I-205 EB	West of Tracy Blvd	Saturday	8,100	0.96	4	No		Level			1.0%	0.0%	1.5	1.2	1.00	1.00	2,120

HCM 2000
Basic Freeway Segments
Capacity Analysis

General Information			*Speed Calculation*												*Results*	
	Freeway/ Direction	From/To	BFFS (mph)	Lane Width (ft)	f_{LW}	R. Shoulder Width (ft)	f_{LC}	f_N	IC Density (per mi)	f_{ID}	Calculated FFS (mph)	Measured FFS (mph)	FFS (mph)	S (mph)	Density, D (pcplpm)	Level of Service
1	I-205 WB	East of Tracy Blvd	70	12	0	6	0	1.5	1	2.5	66.0		66.0	66.0	**20.8**	**C**
2	I-205 WB	West of Tracy Blvd	70	12	0	6	0	1.5	1	2.5	66.0		66.0	66.0	**19.2**	**C**
1	I-205 EB	East of Tracy Blvd	70	12	0	6	0	1.5	1	2.5	66.0		66.0	54.5	**42.2**	**E**
2	I-205 EB	West of Tracy Blvd	70	12	0	6	0	1.5	1	2.5	66.0		66.0	59.0	**36.5**	**E**
1	I-205 WB	East of Tracy Blvd	70	12	0	6	0	1.5	1	2.5	66.0		66.0	65.9	**24.0**	**C**
2	I-205 WB	West of Tracy Blvd	70	12	0	6	0	1.5	1	2.5	66.0		66.0	66.0	**22.1**	**C**
1	I-205 EB	East of Tracy Blvd	70	12	0	6	0	1.5	1	2.5	66.0		66.0	56.1	**40.2**	**E**
2	I-205 EB	West of Tracy Blvd	70	12	0	6	0	1.5	1	2.5	66.0		66.0	59.7	**35.5**	**E**

HCM 2000
Basic Freeway Segments
Capacity Analysis

Jurisdiction Tracy
Analysis Year Cumulative Plus Project
Analyst FJM

Agency or Company Fehr & Peers
Date 5/13/2009
Project Description Holly Sugar Sports Park EIR

General Information | *Flow Rate Calculation*

	Freeway/ Direction	From/To	Analysis Time Period	Volume (vph)	PHF	Lanes	HOV Lane?	HOV Lane Volume	Terrain	Grade %	Length (mi)	Truck/ Bus %	RV %	E_T	E_R	f_{HV}	f_P	Flow Rate v_p (pcphpl)
1	I-205 WB	East of Tracy Blvd	Weekday	5,168	0.97	4	No		Level			7.0%	0.0%	1.5	1.2	0.97	1.00	1,379
2	I-205 WB	West of Tracy Blvd	Weekday	4,745	0.97	4	No		Level			7.0%	0.0%	1.5	1.2	0.97	1.00	1,266
1	I-205 EB	East of Tracy Blvd	Weekday	8,651	0.97	4	No		Level			7.0%	0.0%	1.5	1.2	0.97	1.00	2,308
2	I-205 EB	West of Tracy Blvd	Weekday	8,066	0.97	4	No		Level			7.0%	0.0%	1.5	1.2	0.97	1.00	2,152
1	I-205 WB	East of Tracy Blvd	Saturday	6,676	0.95	4	No		Level			2.0%	0.0%	1.5	1.2	0.99	1.00	1,774
2	I-205 WB	West of Tracy Blvd	Saturday	5,543	0.95	4	No		Level			2.0%	0.0%	1.5	1.2	0.99	1.00	1,473
1	I-205 EB	East of Tracy Blvd	Saturday	8,895	0.96	4	No		Level			1.0%	0.0%	1.5	1.2	1.00	1.00	2,328
2	I-205 EB	West of Tracy Blvd	Saturday	8,259	0.96	4	No		Level			1.0%	0.0%	1.5	1.2	1.00	1.00	2,162

HCM 2000
Basic Freeway Segments
Capacity Analysis

General Information			*Speed Calculation*												*Results*	
	Freeway/ Direction	From/To	BFFS (mph)	Lane Width (ft)	f_{LW}	R. Shoulder Width (ft)	f_{LC}	f_N	IC Density (per mi)	f_{ID}	Calculated FFS (mph)	Measured FFS (mph)	FFS (mph)	S (mph)	Density, D (pcplpm)	Level of Service
1	I-205 WB	East of Tracy Blvd	70	12	0	6	0	1.5	1	2.5	66.0		66.0	66.0	**20.9**	**C**
2	I-205 WB	West of Tracy Blvd	70	12	0	6	0	1.5	1	2.5	66.0		66.0	66.0	**19.2**	**C**
1	I-205 EB	East of Tracy Blvd	70	12	0	6	0	1.5	1	2.5	66.0		66.0	54.3	**42.5**	**E**
2	I-205 EB	West of Tracy Blvd	70	12	0	6	0	1.5	1	2.5	66.0		66.0	58.9	**36.5**	**E**
1	I-205 WB	East of Tracy Blvd	70	12	0	6	0	1.5	1	2.5	66.0		66.0	64.9	**27.3**	**D**
2	I-205 WB	West of Tracy Blvd	70	12	0	6	0	1.5	1	2.5	66.0		66.0	66.0	**22.3**	**C**
1	I-205 EB	East of Tracy Blvd	70	12	0	6	0	1.5	1	2.5	66.0		66.0	53.6	**43.4**	**E**
2	I-205 EB	West of Tracy Blvd	70	12	0	6	0	1.5	1	2.5	66.0		66.0	58.7	**36.8**	**E**

APPENDIX E:
TRIP GENERATION ASSUMPTIONS

FEHR & PEERS
TRANSPORTATION CONSULTANTS

Holly Sugar Sports Park Trip Generation Assumptions

The Sports Park will be utilized by youth leagues. Therefore it is assumed that the players will be driven to the Sports Park by others.

Active Sports Park Area

Baseball/Softball

- Weekday Practice Assumptions:
  - 16 players[1] per team
  - 1 team practicing per ball field
  - Assume an average of 2 players per vehicle
  - Assume that 50% of parents drop off kids at practice, the other 50% stay
  - Trip rate per field: 12 total trips per field, 8 inbound and 4 outbound trips
- Weekend Game Assumptions:
  - 32 players per field, 1 spectator per player
  - Assume an average of 2 people per vehicle
  - Assume that for each field during the peak hour, one game ends and one game begins
  - Trip rate per field: 64 total trips, 32 inbound trips, and 32 outbound trips

Football

- Weekday Practice Assumptions:
  - 32[2] players per team
  - 1 team practicing per ball field
  - Assume an average of 2 players per vehicle
  - Assume that 50% of parents drop off kids at practice, the other 50% stay
  - Trip rate per field: 24 total trips, 16 inbound trips, and 8 outbound trips
- Weekend Game Assumptions
  - 64 players per field, 1 spectator per player
  - Assume an average of 2 people per vehicle
  - Assume that for each field during the peak hour, one game ends and one game begins
  - Trip rate per field: 128 total trips, 64 inbound trips, and 64 outbound trips

Soccer

- Weekday Practice Assumptions:
  - ITE rate available (LU Code 488) for Weekday PM peak hour: 20.67 trips per field , with a 69% inbound and 31% outbound directional distribution[3]
- Weekend Game Assumptions:
  - No ITE published rate available for soccer complex
  - 32 players per field (16 per team), 1 spectator per player
  - Assume an average of 2 people per vehicle
  - Trip rate per field: 64 total trips, 32 inbound and 32 outbound

---

[1] This figure also includes coaches and managers.
[2] This figure also includes coaches and managers.
[3] Source: *Trip Generation (8th Edition),* ITE, 2008.

Soccer/Football Stadium

- Weekday Practice Assumptions
  - ITE rate available (LU Code 488) for Weekday PM peak hour: 20.67 trips per field , with a 69% inbound and 31% outbound directional distribution[4]
- Weekend Game Assumptions
  - Assume sold-out attendance
  - Assume an occupancy rate of 2.5 people/vehicle
  - Assume that 60% of the vehicles enter within the peak hour
  - Assume that 10% of the entering trips are drop-offs

Future Expansion Area

Recreation Center

- ITE published rate available for Recreational Community Center (LU Code 495) [5]
  - Weekday PM rate: Ln (T) = 0.58 Ln (X) + 2.21, 37% inbound / 63% outbound
  - Saturday rate: 1.07 trips / ksf, 54% inbound / 46% outbound

Library

- ITE published rate available for Library (LU Code 590) [6]
  - Weekday PM rate: 7.30 trips / ksf, 48% inbound / 52% outbound
  - Saturday rate: 6.75 trips / ksf, 53% inbound / 47% outbound

Skate Park

- Surveyed trip generation rates from Novato Skate Park (November 2002):
  - Weekday PM rate: 0.73 trips / ksf , 45% inbound / 55% outbound
  - Saturday rate: 3.13 trips / ksf , 66% inbound / 34% outbound

BMX Park

- BMX park is similar to a skate park, therefore the rates used for a skate park were assumed.

Paintball Course, Hard Courts, Athletic Fields, Spray Park, and Bocce Ball Courts

- There are no published rates for any of these land uses.
- Based on City direction, there will be no leagues played on the hard courts, and the athletic fields are not going to be striped for any specific sport (just a large grassy area)
- Assume the ITE rate for County Park (LU Code 412) for the total size of the area with hard courts, athletic fields, spray park, and paintball course[7]
  - Weekday PM rate: 0.06 trips / acre, 41% inbound / 59% outbound
  - Saturday rate: 2.24 trips / acre, 59% inbound / 41% outbound

---

[4] Source: *Trip Generation (8th Edition),* ITE, 2008.
[5] Source: *Trip Generation (8th Edition),* ITE, 2008.
[6] Source: *Trip Generation (8th Edition),* ITE, 2008.
[7] Source: *Trip Generation (8th Edition),* ITE, 2008.

FEHR & PEERS
TRANSPORTATION CONSULTANTS

TABLE E-1

TRIP GENERATION – ACTIVE SPORTS PARK AREA

Individual Use	Amount	Weekday PM[1]			Saturday[1]		
		In	Out	Total	In	Out	Total
Soccer Season							
Soccer Facilities	14 Fields	199	90	289	448	448	896
Soccer/Football Stadium	1 Field	14	7	21	840	84	924
Soccer Season Total	**15 Fields**	**213**	**97**	**310**	**1,288**	**532**	**1,820**
Baseball/Softball Season							
Baseball Facilities	18 Fields	144	72	216	576	576	1,152
Softball Facilities	5 Fields	40	20	60	160	160	320
Baseball/Softball Season Total	**23 Fields**	**184**	**92**	**276**	**736**	**736**	**1,472**
Football Season							
Football Facilities	4 Fields	64	32	96	256	256	512
Soccer/Football Stadium	1 Field	16	8	24	840	84	924
Football Season Total	**5 Fields**	**80**	**40**	**120**	**1,096**	**340**	**1,436**

Notes:
1. Refer to Attachment A for trip generation rates and assumptions

Source: *Trip Generation (8th Edition),* ITE, 2008; and Fehr & Peers, 2009.

FEHR & PEERS
TRANSPORTATION CONSULTANTS

Motor Sports Race Tracks Trip Generation and Distribution Assumptions

Weekday Trip Generation Assumptions

- Assume that only the dirt motocross track and BMX track generate peak hour trips
- Motocross and BMX tracks were assumed to generate similar trips to a skate park
  - Surveyed trip generation rates from Novato Skate Park (November 2002):
    - Weekday PM rate: 0.73 trips / ksf , 45% inbound / 55% outbound

Saturday Trip Generation Assumptions

- Assume only the traditional road course to generate peak hour trips
- Assume sold-out attendance
- Assume an occupancy rate of 2.5 people/vehicle
- Assume that 60% of the vehicles enter within the peak hour
- Assume that 10% of the entering trips are drop-offs

TABLE E-2

MOTOR SPORTS RACE TRACKS TRIP GENERATION

Individual Use	Amount	Weekday PM			Saturday		
		In	Out	Total	In	Out	Total
Motocross Track	20 ksf	7	8	15	n/a		
BMX Track	10 ksf	3	4	7	n/a		
Traditional Road Course	1,500 Seating Capacity	n/a			360	36	396
Total		**10**	**12**	**22**	**360**	**36**	**396**

Source: Fehr & Peers, 2009.

Trip Distribution Assumptions

- Assume same trip distribution assumptions used for the Holly Sugar Sports Park

February 25, 2009

Anne-Marie Poggio-Castillou
Regional Habitat Planner
SJCOG, Inc.
555 East Weber Avenue
Stockton, CA 95202

SUBJECT: CITY OF TRACY HOLLY SUGAR SPORTS PARK
BIOLOGICAL ASSESSMENT/SJMSCP COVERAGE APPLICATION

Dear Ms. Poggio-Castillou:

Thank you for taking the time to discuss the SJMSCP Coverage Request process for the Holly Sugar Sports Park located on the northern boundary of the City of Tracy, between Corral Hollow Road and Tracy Boulevard in the Southwest Transition Zone. As discussed on the phone, De Novo Planning Group was retained by the City of Tracy to prepare an Environmental Impact Report for the proposed project, which includes a biological assessment. This letter was prepared as a transmittal of the information on behalf of the City of Tracy that is necessary to complete the SJMSCP Coverage Application as outlined in your letter dated October 24, 2008. Enclosed with this letter you will find the following:

- Attachment A – SJMSCP Response to Lead Agency Advisory Agency Notice to SJCOG, Inc dated October 24, 2008
- Attachment B – Section 8.2.1 (10) Checklist for Unmapped SJMSCP Projects prepared by De Novo Planning Group on behalf of the City of Tracy dated February 18, 2009
- Attachment C – SJCOG/City of Tracy Reimbursement Agreement
- Attachment D – Biological Assessment prepared by De Novo Planning Group on behalf of the City of Tracy dated February 25, 2009

We trust that the enclosed information is adequate for your evaluation, but should you need anything else, please do not hesitate to contact me at 916-580-9818. We look forward to hearing from you.

Sincerely,

DE NOVO PLANNING GROUP
Steve McMurtry
Principal

Attachment A–SJMSCP Response to Lead Agency Advisory Agency Notice to SJCOG, Inc.

To: Scott Claar, City of Tracy Community Development Department
From: Anne-Marie Poggio-Castillou, SJCOG, Inc.
October 24, 2008

RECEIVED
OCT 28 2008
CITY OF TRACY

S J C O G, Inc.

555 East Weber Avenue • Stockton, CA 95202 • (209) 468-3913 • FAX (209) 468-1084

San Joaquin County Multi-Species Habitat Conservation & Open Space Plan (SJMSCP)

SJMSCP RESPONSE TO LEAD AGENCY ADVISORY AGENCY NOTICE TO SJCOG, Inc.

To: Scott Claar, City of Tracy Communitiy Development Department

From: Anne~Marie Poggio-Castillou, Regional Habitat Planner, SJCOG, Inc.

Date: October 24, 2008

Lead Agency Project Title: Holly Sugar Sports Park

Lead Agency Project Number: N/A

Assessor Parcel Number(s): 215-150-01

Total Acres to be converted from Open Space Use: 150 acres

Habitat Types to be Disturbed: Agriculture (C34) and Natural Habitat Lands (W5)

Species Impact Findings: Findings to be determined by SJMSCP biologist.

Dear Mr. Claar:

SJCOG, Inc. has reviewed application for the Holly Sugar Sports Park. This project consists of 150-acres to be converted into a sports park. It is to be constructed in three 50-acre phases. The park is ultimately to have 5 baseball fields, 18 baseball, softball fields, 5 football fields, and 16 soccer fields. Parking lighting concession stands restrooms and access facilities will also be included.

The project is located on the outside of the northern boundary of the City of Tracy, between Corral Hollow and Tracy Blvd. in the Southwest Transition Zone

The City of Tracy is a signatory to San Joaquin County Multi-Species Habitat Conservation and Open Space Plan (SJMSCP). Participation in the SJMSCP satisfies requirements of both the state and federal endangered species acts, and ensures that the impacts are mitigated below a level of significance in compliance with the California Environmental Quality Act (CEQA). Although participation in the SJMSCP is voluntary, lead agents should be aware that if project applicants choose against participating in the SJMSCP, they will be required to provide alternative mitigation in an amount and kind equal to that provided in the SJMSCP.

This project is subject to the SJMSCP. Projects which are seeking coverage through the SJMSCP as an Unmapped Land Use Projects (e.g., annexation and general plan amendments (adjacent to existing incorporated cities and defined communities); airport expansions adjacent to existing airports and Freeway Services Commercial):

> General Plan amendments and city annexations adjacent to existing incorporated cities and adjacent to the boundaries of defined communities (excluding the establishment of new towns or new communities); freeway service commercial; expansion of unincorporated, existing industrial areas; and similar anticipated projects located outside of or adjacent to designated urban boundaries as indicated on the SJMSCP Planned Land Use Map.
>
> Projects for this category of Permitted Activities shall be subject to a case-by-case review by the JPA's Technical Advisory Committee (TAC) to ensure that the biological impacts of the proposed projects are within the parameters established by the SJMSCP and the Biological Opinion. Projects for this category shall be located adjacent to existing city limits, adjacent to the boundaries of defined communities, adjacent to existing airport facilities (i.e., Stockton, Lodi and Tracy airports), within designated Freeway Service Commercial Areas, or adjacent to existing industrial areas in the unincorporated county as indicated on the *SJMSCP Planned Land Use Map* Projects for this category shall not be located in any geographic area where coverage is prohibited under the SJMSCP.

A Project Proponent seeking coverage for a project in this category shall comply with the following procedure *(Section 8.2.1(10) Unmapped Project Process Attached)*:

1. The Project Proponent shall complete, at its sole cost and expense, the "***Section 8.2.1(10) Checklist for Unmapped SJMSCP Projects***" (the "Checklist") and provide the completed Checklist to SJCOG for review. Completion of the Checklist shall include, but shall not be limited to, any and all biological review and other supporting documentation necessary to determine the proposed project is consistent with the SJMSCP and the Biological Opinion. (*Section 8.2.1(10) Checklist for Unmapped SJMSCP Projects Attached)*

Upon receipt of the Checklist, SJCOG shall make a determination that the Checklist is complete or incomplete and shall notify the Project Proponent of the status of the Checklist.

> Upon SJCOG's determination that the Checklist is complete, SJCOG shall conduct a Peer Review of the Checklist. "Peer Review" shall be defined as an evaluation of the completed Checklist by a consultant hired by SJCOG, not currently employed by the Project Proponent, to review the completed Checklist and confirm the finding that the proposed project is consistent with the SJMSCP and the Biological Opinion. The Project Proponent shall be responsible for reimbursing SJCOG for any and all costs associated with the Peer Review,

including but not limited to consultant and attorney's fees. *(Reimbursement Agreement Attached)*

2. The TAC shall fix the meeting date at which time the proposed project shall be considered, which date shall be sixty (60) days after the Checklist is deemed complete *or* by the second regularly scheduled TAC meeting after the Checklist is deemed complete, whichever is later. The TAC, with the concurrence of the TAC's representatives from the Permitting Agencies, may recommend to the JPA coverage for a project in this category.

   If the proposed project is recommended by the TAC, the project shall be heard at the next regularly scheduled JPA meeting.

SJMSCP Coverage for a project in this category shall only be granted if the TAC, with the concurrence of the representatives of the Permitting Agencies, is able to determine the project is consistent with the SJMSCP and the Biological Opinion when considering the following:

1. Coverage for the proposed project is consistent with the overall SJMSCP biological intent and conservation program.

2. Coverage for the proposed project is consistent with the SJMSCP Biological Opinion.

3. Biological impacts and Incidental Take associated with the proposed project are within the scope of the environmental analyses adopted in conjunction with the SJMSCP.

4. The project does not introduce significant new biological conditions into the Plan Area (i.e., impacts of the proposed project are less than or equal to those described in the SJMSCP and its supporting environmental documents).

5. The project acres have been analyzed based on habitat type (e.g., Natural Land, Agricultural Habitat Land or Multi-Purpose Open Space Land) and sufficient take acres remain for each habitat type to allow coverage of the proposed project as permitted under the SJMSCP.

6. The project meets at least one of the following criteria:

   - The project is adjacent to existing city limits; or
   - The project is adjacent to the boundaries of defined communities; or
   - The project is adjacent to existing airport facilities; or
   - The project is within an area designated as Freeway Service Commercial; or
   - The project is an expansion of an existing industrial or urbanized area in the unincorporated county; or
   - The project is proposed for annexation to a jurisdiction.

7. The project is not one of the projects specifically exempted from SJMSCP Coverage as identified in SJMSCP Section 8.2.2.

8. The project does not disrupt a corridor used by the giant garter snake, riparian brush rabbit, riparian woodrat, the San Joaquin kit fox or fisheries as indentified in the SJMSCP.

9. The project does not interfere with the San Joaquin River Wildlife Corridor as established in Section 5.5.2.3.

10. The project does not include installation of a linear barrier to species dispersal as defined in Section 5.5.8.

11. The TAC may consider and make additional findings for an individual project to determine if SJMSCP coverage for a project in this category is consistent with the overall biological intent of the SJMSCP and is consistent with the Biological Opinion.

It is recommended that the local agency along with the project applicant contact SJMSCP staff as early as possible. It is also recommended that the project applicant obtain an information package. http://www.sjcog.org

If you have any questions, please call (209) 468-3913.

Attachments:

- Section 8.2.1(10) Unmapped Project Process
- Section 8.2.1(10) Checklist for Unmapped SJMSCP Projects
- Draft Reimbursement Agreement

Brent Ives
CHAIR

Larry Hansen
VICE CHAIR

Andrew T. Chesley
PRESIDENT

Member Agencies
CITIES OF
ESCALON,
LATHROP,
LODI,
MANTECA,
RIPON,
STOCKTON,
TRACY,
AND
THE COUNTY OF
SAN JOAQUIN

San Joaquin County Multi-Species Habitat Conservation & Open Space Plan (SJMSCP)

Section 8.2.1(10) Unmapped Project Process

- ☐ Lead agency/jurisdiction notice with materials provided to SJCOG, Inc.
- ☐ Response to lead agency/jurisdiction provided by SJCOG, Inc. with SJMSCP coverage application materials
- ☐ Applicant review and agrees to procedures for Unmapped Process for inclusion in the SJMSCP as adopted in September 2008 (e.g. schedule, costs, etc).
- ☐ Complete application packet and reimbursement agreement provided to SJCOG, Inc. for review
- ☐ SJCOG, Inc. to review and process application
- ☐ Project to Habitat Technical Advisory Committee for recommendation to SJCOG, Inc. Board
- ☐ Project to SJCOG, Inc. Board for approval of coverage
- ☐ SJCOG, Inc. notification to project about application for coverage under the SJMSCP
- ☐ SJMSCP biological process for incidental take minimization measures (ITMM)
- ☐ Review and agreement to ITMM by applicant
- ☐ Implementation of ITMM by applicant
- ☐ Pay appropriate fees under SJMSCP

Attachment B–Section 8.2.1(10) Checklist for Unmapped SJMSCP Projects Subject to TAC Review

Prepared for the City of Tracy

Prepared by De Novo Planning Group

February 18, 2009

Project Title: Holly Sugar Sports Park

Project Description: The proposed project consists of the construction and operation of an approximately 282-acre park, which would include an approximately 150-acre active sports park facility, approximately 86 acres of land south of the proposed sports park for passive recreational uses and an approximately 46-acre area to the northwest of the active sports park site as a future expansion area.

The proposed project has been designed to address the community's short-, medium-, and long-term needs for youth sports park facilities. The project would be constructed in phases, as described in greater detail below. The project proposes to ultimately construct up to 16 soccer fields of various sizes for various age groups, up to 18 baseball fields of various sizes for various age groups, up to five softball fields of various sizes for various age groups, up to four football fields, one football/soccer stadium, and up to three play areas. The project site will also include several restroom facilities, concession facilities, bleachers, and parking areas.

The proposed football/soccer stadium, located near the western boundary of the site would include stadium lighting, a public address (PA) system, and synthetic field turf. The remainder of the proposed football, baseball, softball, and soccer fields would be natural grass turf.

A detailed lighting plan and the location of all proposed exterior lighting features have not been finalized. For the purposes of this environmental analysis, it is anticipated that several of the "full-sized" fields will include outdoor lighting systems.

The 86-acre passive recreation area to the south of the active sports park site would serve as a buffer between the more developed park uses and the rural residences to the south of the park site. This area may be used for passive recreational activities such as walking and biking trails, bocce ball, disc golf, or an arboretum. No structures or athletic fields are currently proposed for this area.

The 46-acre future expansion parcel to the northwest of the 150-acre active sports park site may be developed in the future as the demand for developed park facilities in the City of Tracy increases. While no specific uses for this future expansion area have been proposed at this time, the site may be suitable for the future development of facilities such as a skate park, paint-ball, volleyball (sand, grass, hard court), bocce ball, BMX park, gymnasium, hard courts or additional athletic fields due to the fact that the parcel in question is not immediately adjacent to any sensitive residential land uses.

Infrastructure

Roadways: The project site would receive primary access from Tracy Boulevard, along the eastern boundary of the site, as shown in Figure 4. The project improvements include the construction of an access road connecting the site to Tracy Boulevard, which may require widening portions of Tracy Boulevard immediately adjacent to the site and the installation of a traffic light at the intersection of the project site and Tracy Boulevard. A future access road from Corral Hollow Road

to the western boundary of the site would be constructed in the future, as the final phases of the western portion of the site are developed.

Wastewater: The on-site restroom facilities would connect via a lateral line to an existing sewer main line located within the right-of-way of Tracy Boulevard, which would convey the project's wastewater to the City's wastewater treatment plant for treatment.

Potable Water: The project site would receive potable water via a connection to an existing water main located on Tracy Boulevard, near Larch Road. Approximately 2,000 feet of water line will need to be installed on Tracy Boulevard, in addition to the installation of a water lateral on the site. Potable water would be supplied by the City of Tracy.

Landscape Irrigation Water: The initial phases of the project would receive landscaping and irrigation water from a proposed on-site well. The City is currently exploring options for the provision of non-potable water from alternative sources for future phases of park development.

Phasing

The proposed project would be developed in phases, with facility development beginning on the eastern portion of the site and progressing in a westerly direction. The first phase of project construction would include the installation of the project infrastructure described above, including the primary access road connecting the project site to Tracy Blvd. Phase I would include the construction of four soccer fields, two baseball fields and associated parking lot improvements in the eastern-most portion of the project site, as shown in Figure 4.

A detailed phasing plan for the proposed park has not been developed. Subsequent phases of park development will occur with funding availability. For the purposes of this Environmental Impact Report, it is assumed that all phases of the project will be developed within 25 years, or by approximately 2032.

Annexation and Pre-zoning

As described previously, the project site is currently located outside of the Tracy City limits, within the City's Sphere of Influence (SOI). In addition to the development of the proposed park facilities, the City is also proposing to pre-zone the project site for park use and to annex the site into the City of Tracy. The area proposed for annexation includes the 150-acre active sports park site, the 46-acre future expansion area, and the 86-acre passive recreation area, as shown in Figure 3.

General Plan Amendment

In addition to the proposed annexation and pre-zoning of the project site, the City of Tracy may also potentially amend the City's General Plan related to park uses and the Land Use Designation Map.

Project Title: Holly Sugar Sports Park				
Findings	**Not Applicable**	**Undetermined**	**No**	**Yes**
A. SJMSCP General Findings (All Unmapped Projects)	**Not Applicable**	**Undetermined**	**No**	**Yes**
1. SJMSCP Consistency. Coverage for the proposed project is consistent with the overall SJMSCP biological intent and conservation program.				X
2. Coverage for the proposed project does not introduce significant new **biological conditions** into the Plan area or result in significant new or different environmental impacts or--for land uses which have impacts—introduces impacts that are **equal to or are less than** those described in the SJMSCP as originally adopted [Section 8.8.3(45)].				X
3. Biological Opinion. Coverage for the proposed project is consistent with the SJMSCP Biological Opinion				X
4. Incidental Take Minimization Measures. The project can and will comply with the SJMSCP's Incidental Take Minimization Measures as specified in Section 5.2 including any modifications to those measures as authorized by the TAC pursuant to the SJMSCP.				X
5. Mitigation pursuant to the SJMSCP is appropriate for the impacts on the Covered Species. (SJMSCP 8.2.4)				X
B. NEPA, CEQA, FESA, CESA Consistency (All Unmapped Projects)	**Not Applicable**	**Undetermined**	**No**	**Yes**
1. Biological impacts associated with the proposed project are within the scope of the environmental analyses adopted in conjunction with the SJMSCP pursuant to the National Environmental Policy Act, federal Endangered Species Act, California Environmental Quality Act and California Endangered Species Act.				X
2. **Incidental take** associated with the proposed project is within the scope of the environmental analyses adopted in conjunction with the SJMSCP pursuant to the National Environmental Policy Act, Endangered Species Act, California Environmental Quality Act and California Endangered Species Act.				X
C. Incidental Take Acreage Limits (All Unmapped Projects)	**Not Applicable**	**Undetermined**	**No**	**Yes**
1. The project acres have been analyzed based on habitat type (e.g., Natural Land, Agricultural Habitat Land or Multi-Purpose Open Space Land) and **sufficient take acres** remain for each habitat type to allow coverage of the proposed project as permitted under the SJMSCP.				X
2. Natural Lands. The project will not result in exceeding 9,202 acres of conversion of Natural Lands by SJMSCP Permitted Activities (this excludes 5,000 acres for vernal pool grasslands), nor 15% of the total acres of				X

Project Title: Holly Sugar Sports Park				
Findings	**Not Applicable**	**Undetermined**	**No**	**Yes**
open space conversion for SJMSCP Permitted Activities within any five year period, whichever is less. (BO, page 18)				
3. Agricultural Habitat Lands. The project will not result in exceeding 57,635 acres of conversion of Agricultural Habitat Lands by SJMSCP Permitted Activities (BO, page 18)				X
4. Vernal Pool Grasslands. The project does not include coverage for take of SJMSCP Covered Species associated with conversion of vernal pool grasslands (excluded in unmapped areas per BO, page 15).				X
5. Riparian Brush Rabbit Potential Habitat. The proposed project does not exceed the incidental take limit of 3 total acres of potential riparian brush rabbit habitat meeting all of the following criteria: ✓ The project is a Permitted Activity excluding residential, commercial, industrial development or aggregate mining ✓ Impacts less than 0.25 on a per project basis ✓ Results in no harm, injury or harassment of individual brush rabbits. [SJMSCP 5.2.4.23 (C)]				X
6. Riparian Woodrat Potential Habitat. The proposed project does not exceed the incidental take limit of 3 total acres of potential riparian woodrat habitat meeting all of the following criteria: ✓ Permitted Activity excluding residential, commercial, industrial development or aggregate mining ✓ Impacts less than 0.25 on a per project basis ✓ Results in no harm, injury or harassment of individual brush rabbits. [SJMSCP 5.2.4.23 (C)]				X
D. Project Coverage (All Unmapped Projects)	**Not Applicable**	**Undetermined**	**No**	**Yes**
1. The project is **not** one of the following specifically exempted from SJMSCP Coverage per Section 8.2.2 ✓ Ag activities except as provided in 8.2.1 ✓ Dredging except as provided in 8.2.1 ✓ Streambed alteration subject to CDFG review ✓ Water diversion , water conveyance, water				X

Project Title: Holly Sugar Sports Park				
Findings	**Not Applicable**	**Undetermined**	**No**	**Yes**
releases (1.4.9) ✓ Activities covered by preexisting biological opinion ✓ Pesticide use ✓ Section 404 activities until coverage is obtained pursuant to the SJMSCP ✓ Tracy Hills ✓ American River Water Resources Investigation Project ✓ Folsom South Canal Connection of EBMUD supplemental water supply program ✓ South County Surface Water Supply Program ✓ Private activities federally authorized, funded or carried out by federal agencies and projects on federally-owned land (2.1)				
E. Preconstruction Survey (Projects with Natural Lands, Potential SJMSCP Covered Species)	**Not Applicable**	**Undetermined**	**No**	**Yes**
1. The project site includes **Natural Lands or potential habitat for an SJMSCP Covered Species** and a preconstruction survey has been conducted. Or, the project site does not include Natural Lands or potential habitat for an SJMSCP Covered Species and a preconstruction survey was not required by the JPA.				X
2. For projects requiring a preconstruction survey (i.e., with Natural Lands or with the potential for SJMSCP Covered Species): Based on the preconstruction surveys conducted for the proposed project, direct take of an SJMSCP Covered Species will not occur or incidental take minimization measures can be undertaken in compliance with the SJMSCP that sufficient minimize or avoid impacts to the species consistent with the SJMSCP and Biological Opinion as determined by the TAC				X
F. Corridors/Species Movement (All Unmapped Projects)	**Not Applicable**	**Undetermined**	**No**	**Yes**
1. San Joaquin kit fox. The project does not disrupt a continuous corridor for the San Joaquin kit fox defined as follows: Continuous corridor of less than 15% slope with a length to width ratio of no more than 4:1 and no narrower than 0.35 mile connecting the kit fox range from Stanislaus Co. to Alameda Co. through the Southwest Zone with highest priority to land within 3 miles of the Delta Mendota Canal.				X

Project Title: Holly Sugar Sports Park				
Findings	**Not Applicable**	**Undetermined**	**No**	**Yes**
Development in low slope occupied SJ kit fox habitat sw of I-580 is configured to provide a continuous corridor to support resident kit fox/ In *SW/Central Transition Zones*, development is situated to allow stepping stone refugia west of the Delta Mendota Canal between that canal and the CA aqueduct. AND maintains an east-west dispersal habitat through the kit fox corridor such as along transmission lines and RR tracks west of the Delta Mendota Canal where practicable. (SJMSCP Section 5.5.3)				
2. The project does not interfere with the 1200' **San Joaquin River Wildlife Corridor:** 600 feet from the mean high water mark of the San Joaquin River on both sides of the river from Stewart Tract to the Stanislaus/San Joaquin County line except as follows: A. For the area west of the river bordering Stewart Tract, the corridor extends west from the river to the top of the levee on the water side of the levee and excludes Stewart Tract itself B. For the area east of the river bordering land in Lathrop and Manteca as indicated on the SJMSCP Planned Land Use Map, setbacks to be determined based on surveys for riparian brush rabbit. (SJMSCP Section 5.5.2.3)				X
3. Giant Garter Snake. The project will not impact land between the Mid-Valley GGS recovery unit and the San Joaquin Recovery Unit nor disrupt connectivity of this habitat. (BO, pg. 109)				X
4. The project does not include installation of a **linear barrier to species dispersal** as defined in SJMSCP Section 5.5.8 (e.g., median barriers along a highway)				X
G. Species Specific (All Unmapped Projects)	**Not Applicable**	**Undetermined**	**No**	**Yes**
1. Plants. The project will not result in the loss of individuation plants or conversion of occupied habitat for the **large-flowered fiddleneck**, **succulent owl's clover**, **Greene's tuctoria**, **Delta button celery**, **diamond-petaled California poppy**, **showy madia**, **slough thistle**, **legenere**, **Hospital Canyon larkspur** or **Sanford's arrowhead** or the provisions of Section 5.5.2.1 have been implemented and limited take has been authorized pursuant to that section and the findings contained in 5.5.2.1 (B) have been made by the TAC. The project will not result in conversion of occupied				X

Project Title: Holly Sugar Sports Park				
Findings	**Not Applicable**	**Undetermined**	**No**	**Yes**
habitat for **California hibiscus** (BO, p. 151), **Delta mudwort** (BO, p. 152**), Delta tule pea** (BO p. 153), **Mason's lilaeoposis** (BO, p. 154), **Suisun Marsh Aster** (BO, p. 156).				
2. Burrowing Owl. The project will not result in exceeding 19,533 acres of conversion of potential and occupied habitat for the burrowing owl unless the provisions of Section 5.5.2.4 have been met. (SJMSCP Section 5.5.2.4) The project does not encompass known locations of **burrowing owls**. (BO, p. 145)			X	
3. Giant Garter Snake. The project will not result in mortality or harm of individuals or conversion of occupied habitat for the giant garter snake unless the provisions of Section 5.5.2.2 have been implemented and authorized pursuant to that Section 5.5.2.2 and the findings provided in that Section have been made by the TAC. Occupied habitat is: area west of I-5 on Terminous Tract, Shin Kee Tract, White Slough Wildlife Area, Rio Blanco Tract. W2, W3, W4 and D habitat surrounding a documented finding of GGS by a qualified person, and the Caldoni Marsh area.				X
4. Ring-tailed cat. The project will not result in mortality or direct harm to individual ring-tailed cats. (SJMSCP Section 5.5.2.6)				X
5. Riparian brush rabbit. The project will not result in mortality or direct or indirect harm to individual riparian brush rabbits or conversion of known occupied habitat unless the provisions of Section 5.5.2.7 have been met (SJMSCP 5.2.4.23 as modified by BO). Direct or indirect impacts on occupied habitat are assumed with: ✓ Projects with potential to introduce domestic pets on project site ✓ Projects including sewage or other outfall structures discharging into occupied or potential habitat ✓ Projects directly or indirectly introducing human intrusion into occupied or potential habitat (residential and recreational development) Any other project with direct or indirect effects exceeding the criteria in 5.2.4.23.C. (Biological opinion)				X
6. Riparian woodrat. The project will not result in mortality or direct or indirect harm to individual riparian woodrats or conversion of known occupied habitat unless the provisions of Section 5.5.2.7 have been met (SJMSCP				X

Project Title: Holly Sugar Sports Park				
Findings	**Not Applicable**	**Undetermined**	**No**	**Yes**
5.2.4.24, as modified by Biological Opinion). Direct or indirect impacts on occupied habitat are assumed with: ✓ Projects with potential to introduce domestic pets on project site ✓ Projects including sewage or other outfall structures discharging into occupied or potential habitat ✓ Projects directly or indirectly introducing human intrusion into occupied or potential habitat (residential and recreational development) ✓ Any other project with direct or indirect effects exceeding the criteria in 5.2.4.24.C. (Biological Opinion)				
7. Conservancy/Longhorn Fairy Shrimp. The project will not result in mortality or harm to individual conservancy and/or longhorn fairy shrimp (SJMSCP Section 5.5.2.7)				X
8. Yellow-legged frog. The project does not encompass occupied foothill yellow-legged frog habitat. (BO, p. 128)				X
9. Spadefoot toad. The project does not encompass occupied spadefoot toad habitat. (BO, p. 130)				X
10. Tricolored Blackbird. The project does not increase the distance between tricolored blackbird nesting colonies and the closest suitable foraging habitat (BO, p. 135)				X
11. Swainson's hawk. The project does not impact any of the five primary population centers for the Swainson's hawk (BO, pg. 120).				X
12. California tiger salamander. The project does not encompass any known breeding ponds for the California tiger salamander (BO, pg. 125)				X
H. Unmapped Land Use Projects (Unmapped Land Use Projects)	**Not Applicable**	**Undetermined**	**No**	**Yes**
1. The project meets **at least one** of the following criteria: ✓ is adjacent to existing city limits, ✓ is adjacent to the boundaries of defined communities (as defined in the San Joaquin County General Plan), ✓ is adjacent to existing airport facilities, ✓ is within an area designated as Freeway Service Commercial, ✓ is an expansion of an existing industrial area in the unincorporated county [SJMSCP Section 8.2.1(10)]				X

EXPLANATION OF "NO" and "UNDETERMINED" ANSWERS PROVIDED IN PRECEDING TABLE:

During the site visit, nine burrowing owls were observed along the irrigation ditches. The project site is largely in active agricultural use with alfalfa coverage. The irrigation ditches had a large number of ground burrows and ground squirrels were abundant. Burrowing owls forage in open grasslands and shrublands and typically nest in old ground squirrel burrows. Based on the frequency of discing on the majority of the project site, it is unlikely that burrowing owl would nest within the cropland area. However, the presence of ground squirrel burrows along the banks of the ditches constitutes suitable nesting habitat for burrowing owl and burrowing owl was determined to be present during the field survey. It should also be noted that there are documented occurrences of burrowing owl on properties to the east, southeast, southwest, and west of the project site. The proposed project would have a potentially significant impact on burrowing owls. The following mitigation measure is necessary to ensure that the project would not result in a direct take of the species. Implementation of the following mitigation measure would reduce the impact to a ***less than significant*** level.

Mitigation Measures

Mitigation Measure 3.4-1: Burrowing owls were present on the project site during field surveys performed in February 2009 and are presumed to be present prior to the onset of construction activities, whenever they may occur. To the extent feasible, construction should be planned to avoid the burrowing owl breeding season.

During the non-breeding season (September 1 through January 31) burrowing owls occupying the project site should be evicted from the project site by passive relocation as described in the California Department of Fish and Game's Staff Report on Burrowing Owls (Oct., 1995)

During the breeding season (February 1 through August 31) occupied burrows shall not be disturbed and shall be provided with a 75 meter protective buffer until and unless the TAC, with the concurrence of the Permitting Agencies' representatives on the TAC; or unless a qualified biologist approved by the Permitting Agencies verifies through non-invasive means that either: 1) the birds have not begun egg laying, or 2) juveniles from the occupied burrows are foraging independently and are capable of independent survival. Once the fledglings are capable of independent survival, the burrow can be destroyed.

Implementation of this mitigation shall occur prior to grading or site clearing activities. The City of Tracy shall be responsible for monitoring and a qualified biologist shall conduct surveys and relocate owls as required.

SJMSCP TAC Comments:

_____

_____

_____

_____

_____

_____

_____

☐ Approved by the SJMSCP Technical Advisory Committee based on findings A-H.

☐ Denied by the SJMSCP Technical Advisory Committee based on finding _____.

☐ Referred back to staff for additional information by SJMSCP TAC

- Signed _____
  (Chair, SJMSCP TAC) (Date)

Attachment C–SJCOG – City of Tracy Reimbursement Agreement

REIMBURSEMENT AGREEMENT

This Reimbursement Agreement (hereinafter "Agreement") is made and entered into on _____, 2009 by and between SJCOG, INC., a California public benefit corporation (hereinafter "SJCOG"), and **City of Tracy** (hereinafter "**City of Tracy**").

RECITALS

WHEREAS, **City of Tracy** is seeking coverage as another unmapped land use project under the San Joaquin County Multi-Species Habitat Conservation and Open Space Plan ("SJMSCP") for its project (**Holly Sugar Sports Park**), as described in the "Checklist for Unmapped SJMSCP Projects" attached as Exhibit A and incorporated herein ("Project"); and

WHEREAS, **City of Tracy** has completed, at its sole cost and expense, the Checklist for Unmapped SJMSCP Projects ("Checklist") and provided the complete Checklist to SJCOG for review; and

WHEREAS, as part of determining if the Checklist is complete and determining if the Project is consistent with the SJMSCP and the Biological Opinion, SJCOG will incur certain costs and expenses; and

WHEREAS, SJCOG desires to utilize the services of **IFC Jones & Stokes** (hereinafter referred to as "Consultant") as well as Neumiller & Beardlsee as Legal Counsel to perform the necessary "Peer Review" which shall be defined as an evaluation of **City of Tracy's** completed Checklist by a consultant hired by SJCOG, not currently employed by **City of Tracy**, to review the completed Checklist and confirm the finding that the Project is consistent with the SJMSCP and the Biological Opinion; and

WHEREAS, SJCOG will enter into a contract with the Consultant to perform the necessary Peer Review; and

WHEREAS, SJCOG and **City of Tracy** desire to memorialize **City of Tracy's** obligations to reimburse SJCOG for expenses incurred as a result of performing the Peer Review;

NOW, THEREFORE, for good and valuable consideration, SJCOG and **City of Tracy** agree as follows:

TERMS AND CONDITIONS

1. Recitals. The recitals set forth above are true and correct and made a part of this Agreement.

2. Reimbursement. **City of Tracy** hereby agrees to reimburse SJCOG for actual costs incurred by SJCOG for services associated with the performance of the Peer Review, and costs incurred by SJCOG for services performed by SJCOG's Legal Counsel in drafting, negotiating and administering this Agreement. Estimated costs include labor and expenses incurred by the Consultants, Legal Counsel and SJCOG. The Consultants costs are estimated to collectively total **$5000.00**. SJCOG's administrative costs for reviewing and overseeing the Consultants work are twenty-five percent (25%) of the total Consultants costs **$1250.00**. Legal fees are estimated to be approximately **$3500.00**. However, fees may vary based on the complexity of this Agreement and Project. It is estimated, therefore, that actual costs incurred by SJCOG shall be approximately **$6250.00** and **City of Tracy** agrees to reimburse SJCOG for said costs. **City of Tracy**, by signing below, acknowledges that this amount is an estimate only and that the actual costs incurred by SJCOG may be significantly higher or lower than estimated depending on the circumstances. **City of Tracy** shall reimburse SJCOG for actual costs incurred for the performance of the Peer Review.

3. Deposit and Terms of Reimbursement. **City of Tracy** shall make an initial deposit of **$1250.00** (the "Initial Deposit") with SJCOG upon approval of this Agreement. SJCOG shall place the Initial Deposit into a trust fund. SJCOG shall transfer funds from the trust fund account to cover labor costs and expenses, and invoices from the Consultants and Legal Counsel as well as administrative costs incurred by SJCOG.

Forty-five (45) days following receipt of the Initial Deposit, **City of Tracy** shall deposit with SJCOG the remainder of the total estimated cost, **$5000.00** (the "Additional Deposit"). SJCOG shall place the Additional Deposit into a trust fund and shall transfer funds to cover costs incurred in the same manner set forth for the Initial Deposit.

If the Initial Deposit and Additional Deposit should be depleted, **City of Tracy** shall then be billed by SJCOG for the actual costs incurred by SJCOG associated with the Peer Review. SJCOG shall then submit to **City of Tracy** on a monthly basis an invoice for the reimbursement of expenses and administration costs, which invoice shall include copies of invoices from the Consultants, Legal Counsel, and SJCOG for which reimbursement is requested. **City of Tracy** shall pay to SJCOG within thirty (30) days of receipt of any invoice for all expenses identified in each request for reimbursement.

Interest shall be added to any late payments made at a rate of ten percent (10%) per year. If at the termination of this Agreement there are any unspent funds, they shall be refunded to **City of Tracy**. However, should this Agreement terminate as a result of **City of Tracy's** breach, SJCOG shall be entitled to keep any remaining funds of the Initial Deposit and/or the Additional Deposit. SJCOG will not enter into a contract with the Consultant to perform the Peer Review unless and until **City of Tracy** makes the Initial Deposit.

4. Description of Project. This Agreement covers the performance of the Peer Review to determine if the Project is consistent with the SJMSCP and the Biological Opinion.

5. Selection of Consultants. SJCOG has selected and **City of Tracy** hereby agrees that **IFC Jones & Stokes** will be retained by SJCOG to perform the Peer Review.

6. Information. **City of Tracy** agrees to supply SJCOG and the Consultant with all information and technical data necessary to review **City of Tracy's** proposed project so that they can perform the Peer Review. Any information required under this Section shall be supplied by **City of Tracy** in a timely manner and shall only be released for public review after the review and approval of **City of Tracy**.

7. Term of Agreement. This Agreement shall terminate when **City of Tracy** has reimbursed SJCOG all those costs specified in this Agreement.

8. Agreement Not a Guarantee. **City of Tracy** agrees that the reimbursement of costs for the performance of the Peer Review does not constitute a promise, guarantee, or warranty that the Project will be consistent with the SJMSCP and the Biological Opinion.

9. Indemnity and Hold Harmless. **City of Tracy** agrees to defend, indemnify and hold harmless SJCOG and its agents, officers, and employees from any and all claims, actions or proceedings against SJCOG which attack the adequacy, sufficiency, and/or legality of any decision made by SJCOG hereunder.

10. Applicable Law. This Agreement shall be governed by the laws of the State of California.

11. Binding Effect. This Agreement is for the benefit of and shall be binding upon all parties and their respective successors, heirs, executors, administrators, assigns and successors in interest.

12. Non-Assignment. **City of Tracy** shall not assign this Agreement without the prior written approval of SJCOG which shall not be unreasonably withheld.

13. Notices. "Notice" means any notice, demand, request, or other communication or document to be provided under this Agreement. All notices shall be in writing and shall be sent to the following address or at such other address as either party may later specify for that purpose.

SJCOG:

Steve Mayo
Senior Habitat Planner
SJCOG
555 E. Weber Avenue
Stockton, CA 95202

With copy to: Rod A. Attebery
Neumiller & Beardlsee
P.O. Box 20
Stockton, CA 95201-3020

City of Tracy: **Andrew Malik**
Director of Development & Engineering Services
City of Tracy
333 Civic Center Plaza
Tracy, CA 95376

14. Entire Agreement. This Agreement constitutes the entire agreement between the parties regarding its subject matter. This Agreement supersedes all proposals, oral and written, and all negotiations, conversations or discussions heretofore and between the parties related to the subject matter of this Agreement.

15. Amendments. Any modifications to this Agreement shall be in writing and signed by authorized representatives of both parties.

16. Attorney's Fees and Venue. In the event of a dispute arising under this Agreement, the prevailing party shall be entitled to an award against the other party of reasonable attorney's fees and costs incurred in connection with the dispute. The venue for any litigation, arbitration, or mediation shall be San Joaquin County, California.

17. Cumulative Rights; Waiver. The failure by either party to exercise, or delay in exercising any rights under this Agreement, shall not be construed or deemed to be a waiver thereof, nor shall any single or partial exercise by either party preclude any other or future exercise thereof or the exercise of any other right. Any waiver of any provision or any waiver of any breach of any provision of this Agreement must be in writing, and any waiver by either party of any breach of any provision of this Agreement shall not operate as or be construed to be a waiver of any other breach of that provision or of any breach of any other provision of this Agreement.

18. Severability. If any provision of this Agreement is deemed by a court of competent jurisdiction to be invalid, illegal or unenforceable, such provision shall be deemed to be severed or deleted from this Agreement and the balance of this Agreement shall remain in full force and effect notwithstanding such invalidity, illegality or unenforceability.

19. Headings. All headings herein are inserted only for convenience and ease of reference and are not considered in the construction or interpretation of any provision of this Agreement.

20. Signing Authority. The individuals signing this Agreement represent and agree that they have full and actual authority to bind their respective parties to this Agreement.

IN WITNESS WHEREOF, SJCOG and **City of Tracy** have executed this Agreement as of the day and year first above written.

SJCOG, Inc.
a California public benefit corporation

_____
By: STEVE DIAL
Its: Treasurer

Andrew Malik

_____
By: _____

Title: Director of Development & Engineering Services

Attachment D–Biological Resources Assessment

BIOLOGICAL RESOURCES ASSESSMENT

FOR THE

HOLLY SUGAR SPORTS PARK PROJECT

Tracy Boulevard/Corral Hollow Road
Tracy, California

FEBRUARY 25, 2009

Prepared for:

City of Tracy
Department of Development and
Engineering Services
333 Civic Center Plaza
Tracy, CA 95376

Prepared by:

De Novo Planning Group
A Land Use Planning, Design, and Environmental Firm

4630 BRAND AVENUE | SACRAMENTO, CA 95819
info@denovoplanning.com | TEL 916-812-7927

3587 FALKIRK WAY | EL DORADO HILLS, CA 95762
info@denovoplanning.com | TEL 916-580-9818

BIOLOGICAL RESOURCES ASSESSMENT

FOR THE

HOLLY SUGAR SPORTS PARK PROJECT

FEBRUARY 25, 2009

Prepared for:

City of Tracy
Department of Development and
Engineering Services
333 Civic Center Plaza
Tracy, CA 95376

Prepared by:

De Novo Planning Group
A Land Use Planning, Design, and Environmental Firm

4630 BRAND AVENUE | SACRAMENTO, CA 95819
info@denovoplanning.com | TEL 916-812-7927

3587 FALKIRK WAY | EL DORADO HILLS, CA 95762
info@denovoplanning.com | TEL 916-580-9818

TABLE OF CONTENTS

Project Location 3
Project Description 3
Infrastructure 4
Phasing 4
Annexation and Pre-zoning 5
General Plan Amendment 5
Methods 5
Literature and Database Review 5
Aerial-Photo Survey 5
Field Survey 5
Regional Setting 6
Geomorphic Provinces 6
Bioregions 6
Natural and Agricultural Communities 7
Watersheds 8
Local Setting 8
Special-Status Species 9
Regulatory Setting 14
Federal 14
State 16
Impacts and Mitigation Measures 20
Thresholds of Significance 20
Impacts and Mitigation 21

Figures

Figure 1 Project Location Map 29
Figure 2 Project Vicinity Map 31
Figure 3 Project Site Map 33
Figure 4 Conceptual Design 35
Figure 5 CNDDB Special Status Species (1-5 mile radius) 37
Figure 6 CNDDB Swainson's Hawk Occurences (5-10 mile radius) 39

This page left intentionally blank.

PROJECT LOCATION

The project site is located in San Joaquin County, immediately north of the City limits of Tracy, but within the City's Sphere of Influence as shown in Figures 1 and 2.

The project site consists of approximately 282 acres of land located between Tracy Boulevard and Corral Hollow Road north of Larch Road, and south of Sugar Road. The City owns approximately 1,200 acres of property north of the Larch Road developments between Corral Hollow Road and Tracy Boulevard and generally between Corral Hollow Road, Holly Road and Sugar Cut, north of Arbor Road, as shown in Figure 2.

The project site is currently undeveloped and is used for agricultural purposes. There are several irrigation canals that traverse the project site which are currently used to convey non-potable water to the site and the surrounding properties. The western portion of the project site is traversed by PG&E power transmission lines with towers, and a 12-inch diameter underground gas pipeline.

Lands to the north, west and east of the project site are agricultural lands, with a few scattered residences. Land to the south of the project site consists of rural residential development. The surrounding lands can be seen in Figure 3.

PROJECT DESCRIPTION

The proposed project consists of the construction and operation of an approximately 282-acre park, which would include an approximately 150-acre active sports park facility, approximately 86 acres of land south of the proposed sports park for passive recreational uses and an approximately 46-acre area to the northwest of the active sports park site as a future expansion area.

The proposed project has been designed to address the community's short-, medium-, and long-term needs for youth sports park facilities. The project would be constructed in phases, as described in greater detail below. The project proposes to ultimately construct up to 16 soccer fields of various sizes for various age groups, up to 18 baseball fields of various sizes for various age groups, up to five softball fields of various sizes for various age groups, up to four football fields, one football/soccer stadium, and up to three play areas. The project site will also include several restroom facilities, concession facilities, bleachers, and parking areas.

The proposed football/soccer stadium, located near the western boundary of the site would include stadium lighting, a public address (PA) system, and synthetic field turf. The remainder of the proposed football, baseball, softball, and soccer fields would be natural grass turf.

A detailed lighting plan and the location of all proposed exterior lighting features has not been finalized. For the purposes of this environmental analysis, it is anticipated that several of the "full-sized" fields will include outdoor lighting systems.

The 86-acre passive recreation area to the south of the active sports park site would serve as a buffer between the more developed park uses and the rural residences to the south of the park site. This area may be used for passive recreational activities such as walking and biking trails,

bocce ball, disc golf, or an arboretum. No structures or athletic fields are currently proposed for this area.

The 46-acre future expansion parcel to the northwest of the 150-acre active sports park site may be developed in the future as the demand for developed park facilities in the City of Tracy increases. While no specific uses for this future expansion area have been proposed at this time, the site may be suitable for the future development of facilities such as a skate park, paint-ball, volleyball (sand, grass, hard court), bocce ball, BMX park, gymnasium, hard courts or additional athletic fields due to the fact that the parcel in question is not immediately adjacent to any sensitive residential land uses.

INFRASTRUCTURE

Roadways: The project site would receive primary access from Tracy Boulevard, along the eastern boundary of the site, as shown in Figure 4. The project improvements include the construction of an access road connecting the site to Tracy Boulevard, which may require widening portions of Tracy Boulevard immediately adjacent to the site and the installation of a traffic light at the intersection of the project site and Tracy Boulevard. A future access road from Corral Hollow Road to the western boundary of the site would be constructed in the future, as the final phases of the western portion of the site are developed.

Wastewater: The on-site restroom facilities would connect via a lateral line to an existing sewer main line located within the right-of-way of Tracy Boulevard, which would convey the project's wastewater to the City's wastewater treatment plant for treatment.

Potable Water: The project site would receive potable water via a connection to an existing water main located on Tracy Boulevard, near Larch Road. Approximately 2,000 feet of water line will need to be installed on Tracy Boulevard, in addition to the installation of a water lateral on the site. Potable water would be supplied by the City of Tracy.

Landscape Irrigation Water: The initial phases of the project would receive landscaping and irrigation water from a proposed on-site well. The City is currently exploring options for the provision of non-potable water from alternative sources for future phases of park development.

PHASING

The proposed project would be developed in phases, with facility development beginning on the eastern portion of the site and progressing in a westerly direction. The first phase of project construction would include the installation of the project infrastructure described above, including the primary access road connecting the project site to Tracy Blvd. Phase I would include the construction of four soccer fields, two baseball fields and associated parking lot improvements in the eastern-most portion of the project site, as shown in Figure 4.

A detailed phasing plan for the proposed park has not been developed. Subsequent phases of park development will occur with funding availability. For the purposes of this assessment, it is assumed that all phases of the project will be developed within 25 years, or by approximately 2032.

ANNEXATION AND PRE-ZONING

As described previously, the project site is currently located outside of the Tracy City limits, within the City's Sphere of Influence (SOI). In addition to the development of the proposed park facilities, the City is also proposing to pre-zone the project site for park use and to annex the site into the City of Tracy. The area proposed for annexation includes the 150-acre active sports park site, the 46-acre future expansion area, and the 86-acre passive recreation area, as shown in Figure 3.

GENERAL PLAN AMENDMENT

In addition to the proposed annexation and pre-zoning of the project site, the City of Tracy may also potentially amend the City's General Plan related to park uses and the Land Use Designation Map.

METHODS

LITERATURE AND DATABASE REVIEW

De Novo Biologist Steve McMurtry conducted a literature review and database search to gather information regarding sensitive plants, animals, and habitats. The purpose of the literature and database review is to identify species known to occur within the region based on historic range, observations, and habitat requirements. Information for the literature and database review is derived primarily from the following:

- California Natural Diversity Data Base (CNDDB RareFind 3, January 29, 2009);
- California Native Plant Society's Inventory of Rare and Endangered Vascular Plants of California (Skinner, Mark W. and Bruce M. Pavlik, Eds. 2001);
- A Manual of California Vegetation (Sawyer, John and Todd Keeler-Wolf 1995);
- Terrestrial vegetation of California (Barbour and Major 1988);
- Jepson Manual: Higher Plants of California (Hickman, James C. 1993);
- "Special Plants List." Natural Diversity Database. (California Dept. of Fish and Game);
- "Special Animals List." Natural Diversity Database. (California Dept. of Fish and Game);
- "Special Vascular Plants, Bryophytes, and Lichens List." Natural Diversity Database. (California Dept. of Fish and Game).
- Army Corps of Engineers Wetland Delineation Manual. (ACOE 1987)

AERIAL-PHOTO SURVEY

De Novo Biologist Steve McMurtry examined aerial photographs of the project site to document the existing conditions and assess any changes that have occurred from historical aerial photos.

FIELD SURVEY

On February 13, 2009 De Novo Biologist Steve McMurtry traversed the project site on foot to determine the presence of plant communities, special status species, and sensitive habitats. Additionally, a windshield survey was conducted for the area within an approximately one-mile

radius of the project site. The purpose of the site survey was to document the existing biological conditions on the project site, and in the project area.

REGIONAL SETTING

The City of Tracy is located in the southwestern part of San Joaquin County, which is situated in the northern San Joaquin Valley just east of the Diablo Mountain Range. The elevation is approximately 50 feet above mean sea level (msl). The climate is Mediterranean, with cool, wet winters (often blanketed with fog) and hot, dry summers. Precipitation is normally in the form of rain and ranges from approximately 11 to 25 inches per year.

A mixture of agricultural and urbanized land dominates the region. Agricultural activities of the area include: alfalfa fields, hay, row crops, orchards, annual grasslands, cattle pasture, and dairies. This area of the San Joaquin Valley also contains open space that provides foraging, denning, and nesting habitats for wildlife. The Altamont Hills and surrounding mountain ranges to the west and south provide important habitats and movement corridors for a diversity of species.

GEOMORPHIC PROVINCES

The City of Tracy is located in the western portion of the Great Valley Geomorphic Province of California. The Great Valley Province is a broad structural trough bounded by the tilted block of the Sierra Nevada on the east and the complexly folded and faulted Coast Ranges on the west. The City is located to the west of the San Joaquin River, which drains the Great Valley Province into the San Joaquin Delta to the north, ultimately discharging into the San Francisco Bay to the northwest.

BIOREGIONS

The City of Tracy is located within the San Joaquin Valley Bioregion, which is comprised of Kings county, most of Fresno, Kern, Merced, and Stanislaus counties, and portions of Madera, San Luis Obispo, and Tulare counties. The San Joaquin Valley Bioregion is the third most populous out of ten bioregions in the state, with an estimated 2 million people. The largest cities are Fresno, Bakersfield, Modesto, and Stockton. Interstate 5 and State Route 99 are the major north-south roads that run the entire length of the bioregion.

The bioregion is bordered on the west by the coastal mountain ranges. Its eastern boundary joins the southern two-thirds of the Sierra bioregion, which features Yosemite, Kings Canyon, and Sequoia National Parks. At its northern end, the San Joaquin Valley bioregion borders the southern end of the Sacramento Valley bioregion. To the west, south, and east, the bioregion extends to the edges of the valley floor.

Habitat includes vernal pools, valley sink scrub and saltbush, freshwater marsh, grasslands, arid plains, orchards, and oak savannah. Historically, millions of acres of wetlands flourished in the bioregion, but stream diversions for irrigation dried all but about five percent. Remnants of the wetland habitats are protected in this bioregion in publicly owned parks, reserves, and wildlife areas. The bioregion is considered the state's top agricultural producing region with the abundance of fertile soil.

NATURAL AND AGRICULTURAL COMMUNITIES

Natural communities provide the primary habitat for the biological resources in the region. Agricultural communities also provides habitat for a variety of biological resources in the region. Sensitive habitats include those that are of special concern to resource agencies or those that are protected under a Habitat Conservation Plan, Natural Community Conservation Plan, CEQA, the Fish and Game Code, or the Clean Water Act. Additionally, sensitive habitats are usually protected under specific policies from local agencies.

Wetland Communities

A wetland is an area that is inundated or saturated by surface or ground water at a frequency and duration sufficient to support, and that under normal circumstances do support, a prevalence of vegetation typically adapted for life in saturated soil conditions. Wetlands generally include swamps, marshes, bogs, and similar areas.

Wetlands are defined by regulatory agencies as having special vegetation, soil, and hydrology characteristics. Hydrology, or water inundation, is a catalyst for the formation of wetlands. Frequent inundation and low oxygen causes chemical changes to the soil properties resulting in what is known as hydric soils. The prevalent vegetation in wetland communities consists of hydrophytic plants, which are adapted to areas that are frequently inundated with water. Hydrophytic plant species have the ability to grow, effectively compete, reproduce, and persist in low oxygen soil conditions.

Below is a list of wetlands that are found in the Tracy planning area:

- Farmed Wetlands: This category of wetlands includes areas that are currently in agricultural uses. This type of area occurs in the northern portion of the Tracy Planning Area.
- Lakes, Ponds and Open Water: This category of wetlands includes both natural and human-made water bodies such as that associated with working landscapes, municipal water facilities and canals, creeks and rivers.
- Seasonal Wetlands: This category of wetlands includes areas that typically fill with water during the wet winter months and then drain enough to become ideal plant habitats throughout the spring and summer. There are numerous seasonal wetlands throughout the Tracy Planning Area.
- Tidal Salt Ponds and Brackish Marsh: This category of wetlands includes areas affected by irregular tidal flooding with generally poor drainage and standing water. There are minimal occurrences along some of the larger river channels in the northern portion of the Tracy Planning Area.

Riparian Communities

Riparian natural communities support woody vegetation found along rivers, creeks and streams. Riparian habitat can range from a dense thicket of shrubs to a closed canopy of large mature trees covered by vines. Riparian systems are considered one of the most important natural resources.

While small in total area when compared to the state's size, they provide a special value for wildlife habitat.

Over 135 California bird species either completely depend upon riparian habitats or use them preferentially at some stage of their life history. Riparian habitat provides food, nesting habitat, cover, and migration corridors. Another 90 species of mammals, reptiles, invertebrates and amphibians depend on riparian habitat. Riparian habitat also provides riverbank protection, erosion control and improved water quality, as well as numerous recreational and aesthetic values.

Grassland Communities

Grassland communities occur in a wide range of soil types in disturbed and undisturbed environments. Additionally, grasslands can occur where other natural communities have occurred historically, but have been mechanically removed. Vernal pool and vernal swale grasslands are more restricted based on specific soil, drainage, geology, and climate requirements.

Agricultural

Agricultural areas occur throughout the region. The agricultural areas are generally flat and well drained, and as a result are well suited for many crops. Alfalfa fields, hay, row crops, orchards, annual grasslands, cattle pasture, and dairies dominate the agricultural areas. Agricultural fields commonly have irrigation canals, ditches, and stock ponds that serve as a water source or drainage for the fields and habitat for a variety of plants and animals.

WATERSHEDS

A watershed is a region that is bound by a divide that drains to a common watercourse or body of water. Watersheds serve an important biological function, oftentimes supporting an abundance of aquatic and terrestrial wildlife including special-status species and anadromous and native local fisheries. Watersheds provide conditions necessary for riparian habitat.

The City of Tracy is situated within the San Joaquin River Basin. The San Joaquin River Basin is divided up into eight subbasins: South Delta, Lower San Joaquin, Westside, Grasslands, Southeast, Eastside, East Valley Floor, and Northeast. The City of Tracy is located within the South Delta subbasin. Some of the tributaries to the San Joaquin River include the Stanislaus River, Tuolumne River, Merced River, Calaveras River and Mokelumne River, as well as other smaller drainages.

LOCAL SETTING

The project site is located in San Joaquin County, immediately north of the City limits of Tracy, but within the City's Sphere of Influence. The project site consists of approximately 282 acres of land located east of Tracy Boulevard, west of Corral Hollow Road, north of Larch Road, and south of Sugar Road. Lands to the north, west and east of the project site are agricultural lands, with a few scattered residences. Land to the south of the project site consists of rural residential development.

The project site is currently undeveloped and is used for agricultural purposes. The western portion of the project site is traversed by power transmission lines with towers, and a 12-inch diameter underground gas pipeline. There are several irrigation ditches (some concrete lined and others dirt lined) that traverse the project site. The ditches are currently used to capture irrigation and storm drainage runoff from the project site and surrounding properties.

Vegetation

Vegetative communities on the project site are classified as agricultural crops on the majority of the project site, with ruderal plants along the perimeter roadway shoulders and uncultivated areas, including the irrigation ditches. Although the perimeter roadway shoulders and uncultivated areas were largely void of vegetation, they can be characterized largely by nonnative plants such as, Italian ryegrass (*Lolium multiflorum*), brome (*Bromus diandrus, B. hordeaceous*), oats (*Avena fatua*), barley (*Hordeum murinum*), mustard (*Brassica* spp.), storksbill (*Erodium cicutarium*), and wild radish (*Raphanus sativa*).

The irrigation ditches were largely void of vegetation during a field survey conducted in February 2009. The lack of vegetation is likely a result of normal maintenance associated with the drainage functions for winter precipitation and irrigation on agricultural lands in the region. The ditches contained wetland characteristics such as hydrology (presence of water), and hydrophytic plants were present in some sections of the ditches. A formal wetland delineation was not performed because the proposed project includes provisions to avoid activities that would result in a fill or otherwise disturb the ditches.

Wildlife

Agricultural and ruderal vegetation provides habitat for both common and rare wildlife populations. For example, some commonly observed wildlife species in the region include: California ground squirrel (*Spermophilus beecheyi*), California vole (*Microtus californicus*), coyote (*Canis latrans*), raccoon (*Procyon lotor*), opossum (*Didelphis virginiana*), striped skunk (*Mephitis mephitis*), red-tailed hawk (*Buteo jamaicensis*), northern harrier (*Circus cyaneus),* American kestrel (*Falco sparverius*), white-tailed kite (*Elanus leucurus*), American killdeer (*Charadrius vociferus*), gopher snake (*Pituophis melanoleucus*), garter snake (*Thamnophis species*), and western fence lizard (*Sceloporus occidentalis*), as well as many native insect species. There are also several bat species in the region. Bats often feed on insects as they fly over agricultural and natural areas, and all bat species are state species of special concern.

Locally common and abundant wildlife species are important components of the ecosystem. Due to habitat loss, many of these species must continually adapt to using agricultural, ruderal, and ornamental vegetation for cover, foraging, dispersal, and nesting.

SPECIAL-STATUS SPECIES

The following discussion is based on a background search of special-status species that are documented in the California Natural Diversity Database (CNDDB), the California Native Plant Society's (CNPS) Inventory of Rare and Endangered Plants, and the U.S. Fish and Wildlife Service's (USFWS) endangered and threatened species lists. The background search was regional in scope

and focused on the documented occurrences within the boundaries of the following nine USGS quadrants closest to the project site: Altamont, Byron Hot Springs, Cedar Mountain, Clifton Court Forebay, Lone Tree Creek, Mendenhall Springs, Midway, Tracy, and Union Island.

The search revealed fifty-eight documented occurrences of special status species within the region: 33 plants, four invertebrates, nine amphibians/reptiles, seven birds, and five mammals. Table 1 provides a list of special-status species that are documented in the region, their habitat, and current protective status.

TABLE 1: SPECIAL STATUS SPECIES PRESENT IN SAN JOAQUIN COUNTY

SPECIES	*STATUS*	*HABITAT*
Plants		
SHARSMITH'S ONION Allium sharsmithiae	--;--;1B	Cismontane woodland. Rocky, serpentine slopes. 400-1200M.
LARGE-FLOWERED FIDDLENECK Amsinckia grandiflora	FE; CE;1B	Cismontane Woodland, Valley and Foothill grassland. Annual grassland in various soils. 275-550M.
BENT-FLOWERED FIDDLENECK Amsinckia lunaris	--;--;1B	Cismontane woodland, valley and foothill grassland. 50-500M.
ALKALI MILK-VETCH Astragalus tener var. tener	--;--;1B	Alkali playa, valley and foothill grassland, vernal pools. Low ground, alkali flats, and flooded lands; in annual grassland or in playas or vernal pools. 1-170M.
BRITTLESCALE Atriplex depressa	--;--;1B	Chenopod scrub, meadows, playas, valley and foothill grassland, vernal pools. Usually in alkali scalds or alkali clay in meadows or annual grassland; rarely associated w/riparian marshes or vernal pools. 1-320M.
SAN JOAQUIN SPEARSCALE Atriplex joaquiniana	--;--;1B	Chenopod scrub, alkali meadow, valley and foothill grassland. In seasonal alkali wetlands or alkali sink scrub with distichlis spicata, frankenia, etc. 1-250M.
BIG-SCALE BALSAMROOT Balsamorhiza macrolepis var. macrolepis	--;--;1B	Valley and foothill grassland, cismontane woodland. Sometimes on serpentine. 35-1000M.
BIG TARPLANT Blepharizonia plumosa	--;--;1B	Valley and foothill grassland. Dry hills and plains in annual grassland. Clay to clay-loam soils; usually on slopes and often in burned areas. 15-455M.
ROUND-LEAVED FILAREE California macrophylla	--;--;1B	Cismontane woodland, valley, and foothill grasslands. Clay soils. 15-1200M.
CHAPARRAL HAREBELL Campanula exigua	--;--;1B	Chaparral. Rocky sites, usually on serpentine in chaparral. 300-1250M.
LEMMON'S JEWELFLOWER Caulanthus coulteri var. lemmonii	--;--;1B	Pinyon-juniper woodland, valley and foothill grassland. 80-1220M.
CONGDON'S TARPLANT Centromadia parryi ssp. congdonii	--;--;1B	Valley and foothill grassland. Alkaline soils, sometimes described as heavy white clay. 1-230M.
MT. HAMILTON FOUNTAIN THISTLE Cirsium fontinale var. campylon	--;--;1B	Cismontane woodland, chaparral, valley and foothill grassland. In seasonal and perennial drainages on serpentine. 95-890M.
HISPID BIRD'S-BEAK Cordylanthus mollis ssp. hispidus	--;--;1B	Meadows, playas, valley and foothill grassland. In damp alkaline soils, especially in alkaline meadows and alkali sinks with Distichlis. 10-155M.

SPECIES	*STATUS*	*HABITAT*
PALMATE-BRACTED BIRD'S-BEAK Cordylanthus palmatus	FE;CE;1B	Chenopod scrub, valley and foothill grassland. Usually on pescadero silty clay which is alkaline, with distichilis, frankenia, etc. 5-155M.
MT. HAMILTON COREOPSIS Coreopsis hamiltonii	--;--;1B	Cismontane woodland on steep shale talus with open southwestern exposure. 530-1300M.
LIVERMORE TARPLANT Deinandra bacigalupii	--;--;1B	Meadows and seeps. Alkaline meadows. 150-185M.
HOSPITAL CANYON LARKSPUR Delphinium californicum ssp. interius	--;--;1B	Cismontane woodland, chaparral. In wet, boggy meadows, openings in chaparral and in canyons. 225-1060M.
RECURVED LARKSPUR Delphinium recurvatum	--;--;1B	Chenopod scrub, valley and foothills grassland, cismontane woodland on alkaline soils; often in valley saltbrush or valley chenopod scrub. 3-685M.
DELTA BUTTON-CELERY Eryngium racemosum	--;CE;1B	Riparian scrub. Seasonally inundated floodplain on clay. 3-75M.
DIAMOND-PETALED CALIFORNIA POPPY Eschscholzia rhombipetala	--;--;1B	Valley and foothill grassland. Alkaline, clay slopes and flats. 0-975M.
TALUS FRITILLARY Fritillaria falcata	--;--;1B	Chaparral, cismontane woodland, lower montane coniferous forest on shale, granite, or serpentine talus. 300-1525M.
DIABLO HELIANTHELLA Helianthella castanea	--;--;1B	Broadleaved upland forest, chaparral, cismontane woodland, coastal scrub, riparian woodland, valley and foothill grassland. Usually in chaparral/oak woodland interface in rocky, azonal soils often in partial shade. 25-1150M.
NAPA WESTERN FLAX Hesperolinon sp. nov. "serpentinum"	--;--;1B	Chaparral. Mostly found in serpentine chaparral. 225-850M.
LEGENERE Legenere limosa	--;--;1B	Vernal pools. Many historical occurrences are extirpated. In beds of vernal pools. 1-880M.
MASON'S LILAEOPSIS Lilaeopsis masonii	--;CR;1B	Freshwater and brackish marshes, riparian scrub. Tidal zones, in muddy or silty soil formed through river deposition or river bank erosion. 0-10M.
SHOWY GOLDEN MADIA Madia radiata	--;--;1B	Valley and foothill grassland, cismontane woodland, chenopod scrub. Mostly on adobe clay in grassland or among shrubs. 25-1125M.
HALL'S BUSH-MALLOW Malacothamnus hallii	--;--;1B	Chaparral. Some populations on serpentine. 10-550M.
MT. DIABLO PHACELIA Phacelia phacelioides	--;--;1B	Chaparral, cismontane woodland adjacent to trails on rock outcrops and talus slopes; sometimes on serpentine. 500-1370M.
HAIRLESS POPCORN-FLOWER Plagiobothrys glaber	--;--;1A	Meadows and seeps, marshes and swamps. Coastal salt marshes and alkaline meadows. 5-180M.
SUISUN MARSH ASTER Symphyotrichum lentum	--;--;1B	Marshes and swamps (brackish and freshwater). Most often seen along sloughs. 0-3M.
SALINE CLOVER Trifolium depauperatum var. hydrophilum	--;--;1B	Marshes and swamps, valley and foothill grassland, vernal pools. Mesic, alkaline sites. 0-300M.

SPECIES	STATUS	HABITAT
CAPER-FRUITED TROPIDOCARPUM Tropidocarpum capparideum	--;--;1B	Valley and foothill grassland. Alkaline clay. 0-455M.
Invertebrates		
LONGHORN FAIRY SHRIMP Branchinecta longiantenna	FE;--;--	Endemic to the eastern margin of the central coast mtns. in seasonally astatic grassland vernal pools. Inhabit small, clear-water depression in sandstone and clear-to-turbid clay/grass-bottomed pools in shallow swales.
VERNAL POOL FAIRY SHRIMP Branchinecta lynchi	FT;--;--	Endemic to grasslands of the central valley, central coast mtns., and south coast mtns., in astatic rain-filled pools. Inhabit small, clear-water sandstone-depression pools and grassed swale, earth slump, or basalt-flow depression pools.
MIDVALLEY FAIRY SHRIMP Branchinecta mesovallensis	FC;--;--	Vernal pools in the Central Valley.
VALLEY ELDERBERRY LONGHORN BEETLE Desmocerus californicus dimorphus	FT;--;--	Occurs only in the central valley of California, in association with blue elderberry (Sambucus mexicana). Prefers to lay eggs in elderberries 2-8 inches in diameter; some preference shown for "stressed" elderberries.
Amphibians/Reptiles		
WESTERN POND TURTLE Actinemys marmorata	--;CSC;--	A thoroughly aquatic turtle of ponds, marshes, rivers, streams, and irrigation ditches with aquatic vegetation. Need basking sites and suitable (sandy banks or grassy open fields) upland habitat for egg-laying.
CALIFORNIA TIGER SALAMANDER Ambystoma californiense	FC;CSC;--	Grassland habitats associated with long-lasting rain pools such as vernal pools or seasonal wetlands for breeding. Also needs ground refuges such as ground squirrel burrows.
SILVERY LEGLESS LIZARD Anniella pulchra pulchra	--;CSC;--	Sandy of loose loamy soils under sparse vegetation. Soil moisture is essential. They prefer soils with a high moisture content.
SAN JOAQUIN WHIPSNAKE Masticophis flagellum ruddocki	--;CSC;--	Open, dry habitats with little or no tree cover. Found in valley grassland and saltbush scrub in the San Joaquin Valley. Needs mammal burrows for refuge and oviposition sites.
ALAMEDA WHIPSNAKE Masticophis lateralis euryxanthus	FT;CT;--	Restricted to valley-foothill hardwood habitat of the coast ranges between vicinity of Monterey and North San Francisco Bay. Inhabits south-facing slopes and ravines where shrubs form a vegetative mosaic with oak trees and grasses.
COAST (CALIFORNIA) HORNED LIZARD Phrynosoma coronatum	--;CSC;--	Frequents a wide variety of habitats, most common in lowlands along sandy washes with scattered low bushes. Open areas for sunning, bushes for cover, patches of loose soil for burial, and abundant supply of ants and other insects.
FOOTHILL YELLOW-LEGGED FROG Rana boylii	--;CSC;--	Partly-shaded, shallow streams and riffles with a rocky substrate in a variety of habitats. Need at least some cobble-sized substrate for egg-laying. Need at least 15 weeks to attain metamorphosis.
CALIFORNIA RED-LEGGED FROG Rana draytonii	FT;CSC;--	Lowlands and foothills in or near permanent sources of deep water with dense, shrubby or emergent riparian vegetation. Requires 11-20 weeks of permanent water for larval development. Must have access to aestivation habitat.
WESTERN SPADEFOOT TOAD	--;CSC;--	Occurs primarily in grassland habitats, but can be found

SPECIES	STATUS	HABITAT
Spea hammondii		in valley-foothill hardwood woodlands. Vernal pools are essential for breeding and egg-laying.
Birds		
TRICOLORED BLACKBIRD Agelaius tricolor	--;CSC;--	Highly colonial species, most numerous in central valley and vicinity. Largely endemic to California. Requires open water, protected nesting substrate, and foraging area with insect prey within a few km of the colony.
BURROWING OWL Athene cuniculari	--;CSC;--	Open, dry annual or perennial grasslands, deserts and scrublands characterized by low-growing vegetation. Subterranean nester, dependent upon burrowing mammals, most notably, the California ground squirrel.
SWAINSON'S HAWK Buteo swainsoni	--;CT;--	Breeds in grasslands with scattered trees, juniper-sage flats, riparian areas, savannahs, and agricultural or ranches. Requires adjacent suitable foraging areas such as grasslands, or alfalfa or grain fields supporting rodent populations.
NOTHERN HARRIER Circus cyaneus	--;CSC;--	Coastal salt and fresh-water marsh. Nest and forage in grasslands, from salt grass in desert sink to mountain cienagas. Nests on ground in shrubby vegetation, usually at marsh edge; nest built of a large mound of sticks in wet areas.
BALD EAGLE Haliaeetus leucocephalus	FD;CE;--	Ocean shore, lake margins, and rivers for both nesting and wintering. Most nests within one mile of water. Nests in large, old-growth, or dominant live three w/open branches especially ponderosa pine. Roosts communally in winter.
LOGGERHEAD SHRIKE Lanius ludovicianus	--;CSC;--	Broken woodlands, savannah, pinyon-juniper, Joshua tree, and riparian woodlands, desert oases, scrub and washes. Prefers open country for hunting, with perches for scanning, and fairly dense shrubs and brush for nesting.
RAPTORS (BIRDS OF PREY: FALCONS. HAWKS, OWLS, ETC.) AND OTHER MIGRATORY AND RESIDENT BIRDS	MBTA; §3503.5 DFG Code	Large trees and riparian woodlands for nesting.
Mammals		
PALLID BAT Antrozous pallidus	--;CSC;--	Deserts, grasslands, shrublands, woodlands and forests. Most common in open, dry habitats with rocky areas for roosting. Roosts must protect bats from high temperatures. Very sensitive to disturbance of roosting sites.
TOWNSEND'S BIG-EARED BAT Corynorhinus townsendii	--;CSC;--	Throughout California in a wide variety of habitats. Most common in mesic sites. Roosts in the open hangins from walls and ceilings. Roosting sites limited. Extremely sensitive to human disturbance.
WESTERN MASTIFF BAT Eumops perotis californicus	--;CSC;--	Many open semi-arid to arid deciduous woodlands, coastal scrub, grasslands, chaparral, etc. Roosts in crevices in cliff faces, high buildings, trees and tunnels.
AMERICAN BADGER Taxidea taxus	--;CSC;--	Most abundant in drier open stages of most shrub, forest, and herbaceous habitats, with friable soils. Need sufficient food, friable soils and open, uncultivated ground. Prey on burrowing rodents. Dig burrows.
SAN JOAQUIN KIT FOX	FE;CT;--	Annual grasslands or grassy open stages with scattered shrubby vegetation. Need loose textured sandy soils for

SPECIES	STATUS	HABITAT
Vulpes macrotis mutica		burrowing, and suitable prey base.

SOURCE: DFG CNDDB 2009

Abbreviations:
FE Federal Endangered
FT Federal Threatened
FC Federal Candidate
FPD Federal proposed for delisting
FPT Federal proposed threatened
FD Federal delisted

MBTA Protected by Migratory Bird Treaty Act
CE California Endangered Species
CT California Threatened
CR California Rare (Protected by Native Plant Protection Act)
CSC CDFG Species of Special Concern
CC State candidate for listing
1B CNPS - Rare, Threatened, or Endangered

REGULATORY SETTING

There are a number of regulatory agencies whose responsibility includes the oversight of the natural resources of the state and nation including the CDFG, USFWS, USACOE, and the National Marine Fisheries Service. These agencies often respond to declines in the quantity of a particular habitat or plant or animal species by developing protective measures for those species or habitat type. Federal and state agencies are increasingly involved with projects at the local level in San Joaquin County. The following is an overview of the federal, state and local regulations that are applicable to the proposed project.

FEDERAL

Federal Endangered Species Act

The Federal Endangered Species Act (FESA), passed in 1973, defines an endangered species as any species or subspecies that is in danger of extinction throughout all or a significant portion of its range. A threatened species is defined as any species or subspecies that is likely to become an endangered species within the foreseeable future throughout all or a significant portion of its range.

Once a species is listed it is fully protected from a “take” unless a take permit is issued by the USFWS. A take is defined as the harassing, harming, pursuing, hunting, shooting, wounding, killing, trapping, capturing, or collecting wildlife species or any attempt to engage in such conduct, including modification of its habitat (16 USC 1532, 50 CFR 17.3). Proposed endangered or threatened species are those species for which a proposed regulation, but not a final rule, has been published in the Federal Register.

Migratory Bird Treaty Act

To kill, posses, or trade a migratory bird, bird part, nest, or egg is a violation of the Federal Migratory Bird Treaty Act (FMBTA: 16 U.S.C., §703, Supp. I, 1989), unless it is in accordance with the regulations that have been set forth by the Secretary of the Interior.

Bald and Golden Eagle Protection Act

The Bald and Golden Eagle Protection Act (16 U.S.C. §668 et seq.) as amended provides for the protection of the bald eagle (the national emblem) and the golden eagle by prohibiting, except under certain specified conditions, the taking, possession and commerce of such birds. The

protection provided includes the import, export, take, sell, purchase or barter any bald eagle or golden eagle, their parts, products, nests or eggs. The taking includes pursuing, shooting, poisoning, wounding, killing, capturing, trapping, collecting, molesting or disturbing. The law provides exceptions that can be granted for scientific or exhibition use, or for traditional and cultural use by Native Americans.

Clean Water Act – Section 404

Section 404 of the CWA regulates all discharges of dredged or fill material into waters of the U.S. Discharges of fill material includes the placement of fill that is necessary for the construction of any structure, or impoundment requiring rock, sand, dirt, or other material for its construction; site-development fills for recreational, industrial, commercial, residential, and other uses; causeways or road fills; and fill for intake and outfall pipes and subaqueous utility lines [33 C.F.R. §328.2(f)].

Waters of the U.S. include lakes, rivers, streams, intermittent drainages, mudflats, sandflats, wetlands, sloughs, and wet meadows. Wetlands are defined as "those areas that are inundated or saturated by surface or groundwater at a frequency and duration sufficient to support and under normal circumstances do support, a prevalence of vegetation typically adapted for life in saturated soil conditions" [33 C.F.R. §328.3(b)]. Waters of the U.S. exhibit a defined bed and bank and ordinary high water mark (OHWM). The OHWM is defined by the USACOE as "that line on shore established by the fluctuations of water and indicated by physical character of the soil, destruction of terrestrial vegetation, the presence of litter and debris, or other appropriate means that consider the characteristics of the surrounding areas" [33 C.F.R. §328.3(e)].

The USACOE is the agency responsible for administering the permit process for activities that affect waters of the U.S. Executive Order 11990 is a federal implementation policy, which is intended to result in no net loss of wetlands.

Clean Water Act – Section 401

Section 401 of the CWA (33 U.S.C. 1341) requires an applicant who is seeking a 404 permit to first obtain a water quality certification from the Regional Water Quality Control Board. To obtain the water quality certification, the Regional Water Quality Control Board must indicate that the proposed fill would be consistent with the standards set forth by the state.

Department of Transportation Act - Section 4(f)

Section 4(f) has been part of Federal law since 1966. It was enacted as Section 4(f) of the Department of Transportation (DOT) Act of 1966 and set forth in Title 49 United States Code (U.S.C.), Section 1653(f). In January 1983, as part of an overall recodification of the DOT Act, Section 4(f) was amended and codified in 49 U.S.C. Section 303. This law established policy on Lands, Wildlife and Waterfowl Refuges, and Historic Sites as follows:

> *It is the policy of the United States Government that special effort should be made to preserve the natural beauty of the countryside and public park and recreation lands, wildlife and waterfowl refuges, and historic sites. The Secretary of*

Transportation shall cooperate and consult with the Secretaries of the Interior, Housing and Urban Development, and Agriculture, and with the States, in developing transportation plans and programs that include measures to maintain or enhance the natural beauty of lands crossed by transportation activities or facilities. The Secretary of Transportation may approve a transportation program or project (other than any project for a park road or parkway under section 204 of title 23) requiring the use of publicly owned land of a public park, recreation area, or wildlife and waterfowl refuge of national, state, or local significance, or land of a historic site of national, state, or local significance (as determined by the Federal, state, or local officials having jurisdiction over the park, area, refuge, or site) only if: a) There is no prudent and feasible alternative to using that land; and b) The program or project includes all possible planning to minimize harm to the park, recreation area, wildlife and waterfowl refuge, or historic site resulting from the use.

STATE

Fish and Game Code §1900-1913 California Native Plant Protection Act

In 1977 the State Legislature passed the Native Plant Protection Act (NPPA) in recognition of rare and endangered plants of the state. The intent of the law was to preserve, protect, and enhance endangered plants. The NPPA gave the California Fish and Game Commission the power to designate native plants as endangered or rare, and to require permits for collecting, transporting, or selling such plants. The NPPA includes provisions that prohibit the taking of plants designated as "rare" from the wild, and a salvage mandate for landowners, which requires notification of the CDFG 10 days in advance of approving a building site.

Fish and Game Code §2050-2097 - California Endangered Species Act

The California Endangered Species Act (CESA) protects certain plant and animal species when they are of special ecological, educational, historical, recreational, aesthetic, economic, and scientific value to the people of the State. CESA established that it is State policy to conserve, protect, restore, and enhance endangered species and their habitats.

CESA was expanded upon the original Native Plant Protection Act and enhanced legal protection for plants. To be consistent with Federal regulations, CESA created the categories of "threatened" and "endangered" species. It converted all "rare" animals into the Act as threatened species, but did not do so for rare plants. Thus, there are three listing categories for plants in California: rare, threatened, and endangered. Under State law, plant and animal species may be formally designated by official listing by the California Fish and Game Commission.

Fish and Game Code §3503, 3503.5, 3800 - Predatory Birds

Under the California Fish and Game Code, all predatory birds in the order Falconiformes or Strigiformes in California, generally called “raptors,” are protected. The law indicates that it is unlawful to take, posses, or destroy the nest or eggs of any such bird unless it is in accordance with the code. Any activity that would cause a nest to be abandoned or cause a reduction or loss in a reproductive effort is considered a take. This generally includes construction activities.

Fish and Game Code §1601-1603 – Streambed Alteration

Under the California Fish and Game Code, CDFG has jurisdiction over any proposed activities that would divert or obstruct the natural flow or change the bed, channel, or bank of any lake or stream. Private landowners or project proponents must obtain a "Streambed Alteration Agreement" from CDFG prior to any alteration of a lake bed, stream channel, or their banks. Through this agreement, the CDFG may impose conditions to limit and fully mitigate impacts on fish and wildlife resources. These agreements are usually initiated through the local CDFG warden and will specify timing and construction conditions, including any mitigation necessary to protect fish and wildlife from impacts of the work.

Public Resources Code § 21000 - California Environmental Quality Act

The California Environmental Quality Act (CEQA) identifies that a species that is not listed on the federal or state endangered species list may be considered rare or endangered if the species meets certain criteria. Under CEQA public agencies must determine if a project would adversely affect a species that is not protected by FESA or CESA. Species that are not listed under FESA or CESA, but are otherwise eligible for listing (i.e. candidate, or proposed) may be protected by the local government until the opportunity to list the species arises for the responsible agency.

Species that may be considered for review are included on a list of "Species of Special Concern," developed by the CDFG. Additionally, the California Native Plant Society (CNPS) maintains a list of plant species native to California that have low numbers, limited distribution, or are otherwise threatened with extinction. This information is published in the Inventory of Rare and Endangered Vascular Plants of California. List 1A contains plants that are believed to be extinct. List 1B contains plants that are rare, threatened, or endangered in California and elsewhere. List 2 contains plants that are rare, threatened, or endangered in California, but more numerous elsewhere. List 3 contains plants where additional information is needed. List 4 contains plants with a limited distribution.

Public Resources Code § 21083.4 - Oak woodlands conservation

In 2004, the California legislature enacted SB 1334, which added oak woodland conservation regulations to the Public Resources Code. This new law requires a County to determine whether a project, within its jurisdiction, may result in a conversion of oak woodlands that will have a significant effect on the environment. If a County determines that there may be a significant effect to oak woodlands, the County must require oak woodland mitigation alternatives to mitigate the significant effect of the conversion of oak woodlands. Such mitigation alternatives include: conservation through the use of conservation easements; planting and maintaining an appropriate number of replacement trees; contribution of funds to the Oak Woodlands Conservation Fund for the purpose of purchasing oak woodlands conservation easements; and/or other mitigation measures developed by the County.

California Wetlands Conservation Policy

In August 1993, the Governor announced the "California Wetlands Conservation Policy." The goals of the policy are to establish a framework and strategy that will:

- Ensure no overall net loss and to achieve a long-term net gain in the quantity, quality, and permanence of wetland acreage and values in California in a manner that fosters creativity, stewardship, and respect for private property.
- Reduce procedural complexity in the administration of State and federal wetland conservation programs.
- Encourage partnerships to make landowner incentive programs and cooperative planning efforts the primary focus of wetland conservation and restoration.

The Governor also signed Executive Order W-59-93, which incorporates the goals and objectives contained in the new policy and directs the Resources Agency to establish an Interagency Task Force to direct and coordinate administration and implementation of the policy.

Regional Conservation Planning

DELTA PROTECTION ACT OF 1992

The primary objective of this legislation is to protect the Sacramento-San Joaquin Delta and its natural resources including wildlife, fish, and the habitats on which they depend. This legislation calls for the adoption of a comprehensive, long-term resource management plan, which includes requirements for the conservation, preservation, and restoration of Delta wildlife, fisheries, and habitats.

THE RECOVERY PLAN FOR UPLAND SPECIES OF THE SAN JOAQUIN VALLEY, CALIFORNIA

The primary objective of this recovery plan is the recovery of 11 endangered and threatened species; along with protection and long-term conservation of candidate species and species of special concern USFWS (USFWS 1998). The species covered in the plan inhabit grasslands and scrublands of the San Joaquin Valley, adjacent foothills, and small valleys.

SAN JOAQUIN COUNTY MULTI-SPECIES HABITAT CONSERVATION AND OPEN SPACE PLAN

A Habitat Conservation Plan (HCP) is a federal planning document that is prepared pursuant to Section 10 of the Federal Endangered Species Act (FESA). An approved HCP within a defined plan area allows for the incidental take of species and habitat that are otherwise protected under FESA during development activities.

A Natural Community Conservation Plan (NCCP) is a state planning document administered by CDFG. An approved NCCP within a defined plan area allows for the incidental take of species and habitat that are otherwise protected under CESA during growth and development activities.

Background: The key purpose of the San Joaquin County Multi-Species Habitat Conservation and Open Space Plan (SJMSCP), is to provide a strategy for balancing the need to conserve Open Space and the need to Convert Open Space to non-Open Space uses while protecting the region's agricultural economy; preserving landowner property rights; providing for the long-term management of plant, fish and wildlife species, especially those that are currently listed, or may be listed in the future, under the Federal Endangered Species Act (ESA) or the California Endangered Species Act (CESA); providing and maintaining multiple-use Open Spaces which contribute to the

quality of life of the residents of San Joaquin County; and accommodating a growing population while minimizing costs to Project Proponents and society at large.

San Joaquin County's past and future (2001-2051) growth has affected and will continue to affect 97 special status plant, fish and wildlife species in 52 vegetative communities scattered throughout San Joaquin County's 1,400+ square miles and 900,000+ acres, which include 43% of the Sacramento-San Joaquin Delta's Primary Zone. The SJMSCP, in accordance with ESA Section 10(a)(1)(B) and CESA Section 2081(b) Incidental Take Permits, provides compensation for the Conversion of Open Space to non-Open Space uses which affect the plant, fish and wildlife species covered by the Plan, hereinafter referred to as "SJMSCP Covered Species". In addition, the SJMSCP provides some compensation to offset the impacts of Open Space land Conversions on non-wildlife related resources such as recreation, agriculture, scenic values and other beneficial Open Space uses.

The SJMSCP compensates for Conversions of Open Space for the following activities: urban development, mining, expansion of existing urban boundaries, non-agricultural activities occurring outside of urban boundaries, levee maintenance undertaken by the San Joaquin Area Flood Control Agency, transportation projects, school expansions, non-federal flood control projects, new parks and trails, maintenance of existing facilities for non-federal irrigation district projects, utility installation, maintenance activities, managing Preserves, and similar public agency projects. These activities will be undertaken by both public and private individuals and agencies throughout San Joaquin County and within the County's incorporated cities of Escalon, Lathrop, Lodi, Manteca, Ripon, Stockton and Tracy. Public agencies including Caltrans (for transportation projects), and the San Joaquin Council of Governments (for transportation projects) also will undertake activities which will be covered by the SJMSCP. In addition, 5,340 acres is allocated for anticipated projects (e.g., annexations, general plan amendments)

Species coverage will be variable under the SJMSCP and will range from full coverage under federal and state law to CEQA coverage only. The 97 SJMSCP Covered Species include 25 state and/or federally listed species. The SJMSCP Covered Species includes 27 plants (6 listed), 4 fish (2 listed), 4 amphibians (1 listed), 4 reptiles (1 listed), 33 birds (7 listed), 15 mammals (3 listed) and 10 invertebrates (5 listed).

Implementation: The SJMSCP is administered by a Joint Powers Authority consisting of members of the San Joaquin County Council of Governments (SJCOG), the California Department of Fish and Game (CDFG), and the US Fish and Wildlife Service. Development project applicants are given the option of participating in the SJMSCP as a way to streamline compliance with required local, State and federal laws regarding biological resources, and typically avoid having to approach each agency independently. According to the SJMSCP, adoption and implementation by local planning jurisdictions provides adequate compensation and mitigation for impacts to plants, fish and wildlife. SJMSCP-permitted activities within the boundaries of San Joaquin County fulfill conservation and open space obligations and policies of local general plans, resolution, ordinances and other regulations as they pertain to plants, fish and wildlife. Adoption and implementation of the SJMSCP also secures compliance pursuant to the state and federal laws such as CEQA, the National Environmental Policy Act (NEPA), the Planning and Zoning Law, the State Subdivision Map

Act, the Porter-Cologne Act and the Cortese-Knox Act in regards to species covered under the SJMSCP.

Since Tracy became a signatory to the SJMSCP at the end of 2001, all applicants for projects within the City have chosen to participate in the Plan, rather than pursue compliance independently. Applicants pay mitigation fees on a per-acre basis, as established by the Joint Powers Authority according to the measures needed to mitigate impacts to the various habitat and biological resources. Different types of land require different levels of mitigation; i.e., one category requires that one acre of a similar land type be preserved for each acre developed, while another type requires that two acres be preserved for each acre developed. The entire County is mapped according to these categories so that land owners, project proponents and project reviewers are easily aware of the applicable SJMSCP fees for the proposed development.

The appropriate fees are collected by the City and remitted to SJCOG for administration. SJCOG uses the funds to preserve open space land of comparable types throughout the County, often coordinating with other private or public land trusts to purchase conservation easements or buy land outright for preservation. Development occurring on land that has been classified under the SJMSCP as "no-pay" would not be required to pay a fee. This category usually refers to already urbanized land and infill development areas. Although the fees are automatically adjusted on an annual basis, based on the construction cost index, they often cannot keep pace with the rapidly rising land prices in the Central Valley. Therefore, SJCOG is currently in the process of updating the mitigation fee schedule to more accurately match the market value of the various land types.

IMPACTS AND MITIGATION MEASURES

THRESHOLDS OF SIGNIFICANCE

Consistent with Appendix G of the CEQA Guidelines, the proposed project will have a significant impact on biological resources if it will:

- Have a substantial adverse effect, either directly or through habitat modifications, on any species identified as a candidate, sensitive, or special-status species in local or regional plans, policies, or regulations, or by the California Department of Fish and Game or U.S. Fish and Wildlife Service;
- Have a substantial adverse effect on any riparian habitat or other sensitive natural community identified in local or regional plans, policies, regulations or by the California Department of Fish and Game or U.S. Fish and Wildlife Service;
- Have a substantial adverse effect on federally protected wetlands as defined by Section 404 of the Clean Water Act (including, but not limited to, marsh, vernal pool, coastal, etc.) through direct removal, filling, hydrological interruption, or other means;
- Interfere substantially with the movement of any native resident or migratory fish or wildlife species or with established native resident or migratory wildlife corridors, or impede the use of native wildlife nursery sites;
- Conflict with any local policies or ordinances protecting biological resources, such as a tree preservation policy or ordinance;

- Conflict with the provisions of an adopted Habitat Conservation Plan, Natural Community Conservation Plan, or other approved local, regional, or state habitat conservation plan.

IMPACTS AND MITIGATION

The California Natural Diversity Data Base (CNDDB) search identified several documented special-status species within the San Joaquin County region. Some species require localized micro-habitats, while others are highly mobile and may occur throughout the region. The project site does not provide adequate habitat for many of the documented special-status species that are known to occur in the region. Below is a brief description of the special status species that are present in the region and their habitat requirements. Table 1 provides a detailed description of the species habitat and listing status.

Impact 1: Direct or Indirect Effects on Special-Status Invertebrate Species (less than significant with mitigation)

Special-status invertebrates that occur within the San Joaquin County region include: longhorn fairy shrimp, vernal pool fairy shrimp, and midvalley fairy shrimp, which requires vernal pools and swale areas within grasslands; and the valley elderberry longhorn beetle, which is an insect that is only associated with blue elderberry plants, oftentimes in riparian areas and sometimes on land in the vicinity of riparian areas. The project site does not contain essential habitat for these special status invertebrates. Furthermore, evidence of these species was not encountered during the field survey. Implementation of the proposed project would have a ***less than significant impact*** on these species. No mitigation is necessary.

Impact 2: Direct or Indirect Effects on Special-Status Reptile and Amphibian Species (less than significant with mitigation)

Special-status reptiles and amphibians that occur within the region include: the western pond turtle, which requires aquatic environments located along ponds, marshes, rivers, and ditches; the California tiger salamander, which is found is grassland habitats where there are nearby seasonal wetlands for breeding; the silvery legless lizard, which is found in sandy or loose loamy soils under sparse vegetation with high moisture content; San Joaquin whipsnake, which requires open, dry habitats with little or no tree cover with mammal burrows for refuge; the Alameda whipsnake, which is restricted to valley-foothill hardwood habitat on south-facing slopes; the California horned lizard, which occurs in a variety of habitats including, woodland, forest, riparian, and annual grasslands, usually in open sandy areas; the foothill yellow-legged frog, which occurs in partly shaded and shallow streams with rocky soils; the California red legged frog, which occurs in stream pools and ponds with riparian or emergent marsh vegetation; and the western spadefoot toad, which requires grassland habitats associated with vernal pools.

The project site contains extensive irrigation and drainage ditches. At the time of the field survey the ditches contained varying levels of water ranging from a few inches to several feet—note: the field survey was performed following several days of precipitation during the winter months. These ditches dry up, or have limited water from irrigation runoff during the hot summer months.

Additionally, it should be noted that the irrigation ditches located within the boundary of the project site had limited vegetation as a result of ditch maintenance activities.

The project site does not contain appropriate habitat for the silvery legless lizard, Alameda whipsnake, California tiger salamander, foothill yellow-legged frog, western pond turtle, California red legged frog, or western spadefoot toad, nor where these species or evidence of the species found during the site visit. These species and their essential habitats are not present. Implementation of the proposed project would have a ***less than significant impact*** on these species. No mitigation is necessary.

The project site is frequently disturbed from active agricultural activities and does not contain high quality habitat for the San Joaquin whipsnake and California horned lizard. Agricultural fields can provide habitat for these species between disturbance activities. There are no documented occurrences of these species within a five mile radius, nor were they not encountered during the field survey. Implementation of the proposed project would have a ***less than significant impact*** on these species. No mitigation is necessary.

Impact 3: Direct or Indirect Effects on Special-Status Bird Species (less than significant with mitigation)

Special-status birds that occur within the region include: tricolored blackbird, Swainson's hawk, northern harrier, and bald eagle, which are associated with streams, rivers, lakes, wetlands, marshes, and other wet environments; loggerhead shrike, and burrowing owl, which lives in open areas, usually grasslands, with scattered trees and brush; and raptors that are present in varying habitats throughout the region.

Swainson's Hawk. There were a variety of raptors observed flying over the project site including a Swainson's hawk, white-tailed kite, and red-tailed hawk. The Swainson's hawk is threatened in California and is protected by the CDFG and the MBTA. Additionally, Swainson's hawk foraging habitat is protected by the CDFG. Swainson's hawks forage in open grasslands and agricultural fields and commonly nest in solitary trees and riparian areas in close proximity to foraging habitat. The foraging range for Swainson's hawk is ten miles from its nesting location. There are numerous documented occurrences of Swainson's hawk within ten miles of the project site. Although no nesting habitat for this species occur onsite, the cropland habitat on the project site is considered suitable foraging habitat for this species.

Construction on the project site could adversely affect Swainson's hawk foraging habitat. The Swainson's hawk is a species covered by the SJMSCP. The proposed project is currently considered an Unmapped Land Use Project by the SJMSCP, which includes annexations of land into the incorporated limits of a city. The City has submitted an application to SJCOG to request coverage of the project site under the SJMSCP. Coverage of a project under the SJMSCP is intended to reduce impacts to biological resources, including Swainson's hawk, resulting from a project. If coverage is granted by SJCOG, the City would be required to pay an appropriate fee established by the SJMSCP and no additional mitigation measure is required. SJCOG would use the mitigation fee to purchase

habitat for Swainson's hawk to be protected in perpetuity. Implementation of the following mitigation measure would reduce the potential impact to a ***less than significant*** level.

MITIGATION MEASURES

Mitigation Measure 1: Prior to approval of the proposed project, obtain the appropriate coverage approval by the Technical Advisory Committee and Joint Powers Authority responsible for administering the SJMSCP and Biological Opinion. Upon approval of coverage by the TAC and JPA, incorporate all Incidental Take Minimization Measures into the project design and construction phase and remit all appropriate fees to the San Joaquin Council of Governments.

Implementation of this mitigation shall occur prior to grading or site clearing activities. The City of Tracy shall be responsible for monitoring and a qualified biologist shall conduct surveys as required.

Burrowing Owls. The project site is largely in active agricultural use with alfalfa coverage. The irrigation ditches had a large number of ground burrows and ground squirrels were abundant. During the site visit, nine burrowing owls were observed along the irrigation ditches. Burrowing owls are a California Species of Special Concern and are protected by the CDFG and the MBTA. Burrowing owls forage in open grasslands and shrublands and typically nest in old ground squirrel burrows. Based on the frequency of disking on the majority of the project site, it is unlikely that burrowing owl would nest within the cropland area. However, the presence of ground squirrel burrows along the banks of the ditches constitutes suitable nesting habitat for burrowing owl and burrowing owl was determined to be present during the field survey. It should also be noted that there are documented occurrences of burrowing owl on properties to the east, southeast, southwest, and west of the project site. The proposed project would have a potentially significant impact on burrowing owls. Implementation of the following mitigation measure would reduce the impact to a ***less than significant*** level.

MITIGATION MEASURES

Mitigation Measure 2: Burrowing owls were present on the project site during field surveys performed in February 2009 and are presumed to be present prior to the onset of construction activities, whenever they may occur. To the extent feasible, construction should be planned to avoid the burrowing owl breeding season.

During the non-breeding season (September 1 through January 31) burrowing owls occupying the project site should be evicted from the project site by passive relocation as described in the California Department of Fish and Game's Staff Report on Burrowing Owls (Oct., 1995)

During the breeding season (February 1 through August 31) occupied burrows shall not be disturbed and shall be provided with a 75 meter protective buffer until and unless the TAC, with the concurrence of the Permitting Agencies' representatives on the TAC; or unless a qualified biologist approved by the Permitting Agencies verifies through non-invasive means that either: 1) the birds have not begun egg laying, or 2) juveniles from the occupied burrows are foraging independently and are capable of independent survival. Once the fledglings are capable of independent survival, the burrow can be destroyed.

Implementation of this mitigation shall occur prior to grading or site clearing activities. The City of Tracy shall be responsible for monitoring and a qualified biologist shall conduct surveys and relocate owls as required.

Impact 4: Direct or Indirect Effects on Special-Status Mammal Species (less than significant with mitigation)

Special-status mammals that occur within the region include: the pallid bat, the Townsend's big eared bat, and the western mastiff bat, which occur in a variety of habitats, including grasslands, trees, cliffs, and buildings; and the American badger and San Joaquin kit fox, which occurs in annual grassland and scrub habitats where there is an abundance of burrowing rodents.

The project site could serve as foraging habitat for the pallid bat, Townsend's big eared bat, or western mastiff bat. These species are highly mobile mammals; however, there are no documented occurrences of these species within a five mile radius of the project site and there is no suitable roosting habitat present onsite. Implementation of the proposed project would have a ***less than significant*** impact on these species. No mitigation is necessary.

The project site is frequently disturbed from active agricultural activities. As a result, the project site does not contain high quality habitat for the American badger or the San Joaquin kit fox. However, these species are highly mobile mammals that may forage on or pass through the project site from time to time. All but one of the documented occurrences of the San Joaquin kit fox occur on the southwest side of Tracy near the foothills. One documented occurrence is located approximately five miles to the northwest near Mountain House. There is only one documented occurrence of American badger, located approximately two miles to the southeast. The proposed project may have an indirect impact on these species by removing potential foraging habitat, but the project site is not in an area that would be classified as a movement corridor for either of these species. Implementation of the proposed project would have a ***less than significant*** impact on these species. No mitigation is necessary.

Impact 5: Direct or Indirect Effects on Special-Status Plant Species (less than significant with mitigation)

Numerous special-status plant species are known to occur in the region. Many of these special status plant species require specialized habitats such as serpentine soils, rocky outcrops, slopes, vernal pools, marshes, swamps, riparian habitat, alkali soils, and chaparral, which are not present on the project site. The project site is located in an area that was likely valley grassland prior to human settlement, and there are several plant species that are found in valley and foothills grasslands areas. These species include large-flowered fiddleneck, bent-flowered fiddleneck, big-balsamroot, big tarplant, round-leaved filaree, Lemmon's jewelflower, and showy golden madia. Human settlement has involved a high frequency of ground disturbance associated with the historical farming activities in the region, including the project site.

The project site was largely covered with alfalfa. There was limited ground cover along the farm roads and irrigation ditches. There is the potential for several special status plants to growth within the irrigation ditches due to the mesic conditions that are present during specific times. These

include the Mason's lilaeopsis, Suisun Marsh aster, and Delta button celery, two of which are documented within a five mile radius of the project site. There are no documented occurrences of special status plants on the project site or within the irrigation ditches on adjacent properties that are interconnected. The potential for their occurrence cannot be dismissed, however, because potentially suitable habitat is present and protocol-level surveys within the ditches have not been conducted (i.e. blooming period surveys).

It is anticipated that the irrigation ditches would be preserved and will continue to serve as drainage for the project site and general vicinity. Drainage plans are not yet prepared, therefore, it is unknown whether or not these ditches will be retained in their existing conditions or modified to meet drainage standards and specifications. There is also a possibility that the ditches could be improved as part of a restoration, landscaping, and drainage plan that incorporates a naturally landscaped drainage feature as an aesthetic, biological, and educational amenity for the community interwoven into the sports park. It is not known whether any modifications to the ditches would occur. If the final project plans show that the ditches will be maintained in their current condition without any disturbance to the plants within the ditches, the project would be determined to have a less than significant impact. Because the final plans are not yet prepared there is a possibility that the project could cause disturbance to the plants within the ditches, which is considered a potentially significant impact. Implementation of the following mitigation measure would reduce the impact to a ***less than significant*** level.

MITIGATION MEASURES

Mitigation Measure 3: Prior to any activities that would result in disturbance to the irrigation ditches, plant survey(s) of the irrigation ditches shall be performed by a qualified botanist. The plant survey(s) shall coincide with the blooming period for special status plants that are known to occur in the region, and shall be performed in accordance with the specific methodologies described in Section 5.2.2.5 of the SJMSCP. If it is determined that the irrigation ditches contain special status plants that are covered by the SJMSCP, the City shall secure an authorization for an incidental take by remitting all appropriate fees to the San Joaquin Council of Governments and incorporating all Incidental Take Minimization Measures into the project design and construction phase. If it is determined that the irrigation ditches contain special status plants that are not covered by the SJMSCP, the City shall either avoid the project area, or seek consultation with the appropriate regulatory agency (CDFG or USFWS) for the appropriate permits and mitigation measures. If it is determined that the irrigation ditches do not contain special status plants then no additional action is necessary.

Implementation of this mitigation shall occur prior to grading or site clearing activities. The City of Tracy shall be responsible for monitoring and a qualified botanist shall conduct surveys as required.

Impact 6: Cumulative Effects on Special-Status Species (less than significant with mitigation)

Construction on the project site would permanently remove agricultural land that provides habitat for the threatened Swainson's hawk and burrowing owl, as well as numerous raptor species. When combined with other projects in the City and throughout the region, the permanent removal of the agricultural land is considered a potentially significant cumulative impact. The SJMSCP was created and adopted to address both the project and cumulative impacts to biological resources, including the burrowing owl and Swainson's hawk. The City continues to participate in the SJMSCP, and the continued collection and application of mitigation fees for the purpose of preserving agricultural lands as foraging territory would reduce the cumulative impacts to a ***less than significant*** level. Implement the biological mitigation measures presented within this EIR and all Incidental Take Minimization Measures required by the SJCOG through the authorization of SJMSCP coverage for the project site.

Impact 7: Adverse Effects on Riparian Habitat or Sensitive Natural Community (less than significant)

The CNDDB record search revealed documented occurrences of eight sensitive habitats within the nine closest USGS quadrants including: Alkali Meadow, Alkali Seep, Cismontane Alkali Marsh, Great Valley Valley Oak Riparian, Northern Claypan Vernal Pool, Sycamore Alluvial Woodland, Valley Needlegrass Grassland, and Valley Sink Scrub. The Great Valley Valley Oak Riparian Forest is the only sensitive habitat that is documented within a five mile radius. The project site does not contain any of these sensitive habitats. The project site is an agricultural field that has historically been used for active agriculture. Implementation of the proposed project would have a ***less-than-significant*** impact. No mitigation is necessary.

Impact 8: Adverse Effects on Protected Wetlands through Direct Removal, Filling, Hydrological Interruption, or Other Means (less than significant with mitigation)

The project site contains irrigation/drainage ditches that may be subject to USACE and CDFG jurisdiction. A formal wetland delineation of jurisdictional waters of the United States within the project site has not been performed and verified by the USACE, nor are any of these activities covered under the SJMSCP. Any activities that would require removal, filling, or hydrologic interruption of the irrigation ditches would be subject to the federal Clean Water Act Section 404 and California Fish and Game Code Section 1601 (Streambed Alteration Agreement). Under these regulations a formal wetland delineation would need to be prepared and verified by the USACE prior to any activities that would involve the irrigation/drainage ditches. However, these irrigation/drainage ditches are not planned to be adversely affected; instead they are planned to be retained for drainage purposes.

Drainage plans are not yet prepared, therefore, it is unknown whether or not these ditches will be retained in their existing conditions or modified to meet drainage standards and specifications. There is also a possibility that the ditches could be improved as part of a restoration, landscaping, and drainage plan that incorporates a naturally landscaped drainage feature as an aesthetic,

biological, and educational amenity for the community interwoven into the sports park. It is not known whether any modifications to the ditches would occur; however, any modification or restoration of the ditches would be subject to Section 404 of the federal Clean Water Act and Section 1601 of the California Fish and Game Code. If the final project plan show that the ditches will be maintained in their current condition without any removal, fill, or hydrologic interruption, the project would be determined to have a less than significant impact. Because the final plans are not yet prepared there is a possibility that the project could cause removal, fill, or hydrologic interruption to the ditches, which is considered a potentially significant impact. Implementation of the following mitigation measure would reduce the impact to a ***less than significant*** level.

MITIGATION MEASURES

Mitigation Measure 4: Prior to any activities that would result in removal, fill, or hydrologic interruption of the irrigation ditches, a formal wetland delineation shall be performed by a qualified biologist and submitted to the USACE for verification. If the USACE determines that the irrigation ditches are jurisdictional and that the project activities would result in a fill, the City shall secure an authorization of the fill through the Section 404 permit process.

Mitigation Measure 5: Prior to any activities that would result in removal, fill, or hydrologic interruption of the irrigation ditches, the City shall consult with the CDFG to determine if the activities are subject to Section 1601 of the Fish and Game Code. If the CDFG determines that the project activities are subject to these regulations, the City shall secure an authorization of the activities through a Streambed Alteration Agreement.

Impact 9: Interference with the Movement of Native Fish or Wildlife Species or with Established Wildlife Corridors, or Impede the Use of Native Wildlife Nursery Sites (less than significant)

The CNDDB record search did not reveal any documented wildlife corridors or wildlife nursery sites on or adjacent to the project site. Furthermore, the field survey did not reveal any wildlife corridors or wildlife nursery sites on or adjacent to the project site. The irrigation/drainage ditches may serve as a corridor for movement of wildlife in the region; however, the project plans include retention of these ditches for drainage, which provides an ancillary benefit of retaining the ditches for wildlife. Implementation of the proposed project would have a ***less-than-significant*** impact. No mitigation is necessary.

Impact 10: Conflict with an Adopted Habitat Conservation Plan (less than significant)

The proposed project is subject to the San Joaquin County Multi-Species Habitat Conservation and Open Space Plan (SJMSCP). The proposed project is an annexation of land into an existing incorporated city limits and is located immediately adjacent to the boundaries of the defined community, which falls into the category of "Unmapped Land Use Project" under the SJMSCP. Projects in this category are subject to a case-by-case review by a Technical Advisory Committee (TAC) to ensure that the biological impacts of the proposed project are within the parameters established by the SJMSCP and the Biological Opinion.

"Unmapped Land Use Projects" that seek coverage under the SJMSCP are required to complete the "*Section 8.2.1(10) Checklist for Unmapped SJMSCP Projects*" with supporting documentation for SJCOG to review and confirm that the proposed project is consistent with the SJMSCP and the Biological Opinion. If the TAC confirms that the proposed project is consistent with the SJMSCP, they will recommend to the Joint Powers Authority that the project receive coverage under the SJMSCP.

The biological resources assessment prepared for the proposed project includes a "*Section 8.2.1(10) Checklist for Unmapped SJMSCP Projects.*" The checklist is Attachment B to SJMSCP Coverage Request. An SJMSCP/Biological Opinion consistency summary is provided below:

- Coverage for the proposed project is consistent with the overall SJMSCP biological intent and conservation program.
- Coverage for the proposed project is consistent with the SJMSCP Biological Opinion.
- Biological impacts and Incidental Take associated with the proposed project are within the scope of the environmental analyses adopted in conjunction with the SJMSCP.
- The project does not introduce significant new biological conditions into the Plan Area (i.e., impacts of the proposed project are less than or equal to those described in the SJMSCP and its supporting environmental documents).
- The project acres have been analyzed based on habitat type (e.g., Natural Land, Agricultural Habitat Land or Multi-Purpose Open Space Land) and sufficient take acres remain for each habitat type to allow coverage of the proposed project as permitted under the SJMSCP.
- The project is adjacent to existing city limits; or
- The project is not one of the projects specifically exempted from SJMSCP Coverage as identified in the SJMSCP.
- The project does not disrupt a corridor used by the giant garter snake, riparian brush rabbit, riparian woo drat, the San Joaquin kit fox or fisheries as indentified in the SJMSCP.
- The project does not interfere with the San Joaquin River Wildlife Corridor.
- The project does not include installation of a linear barrier to species dispersal as defined in the SJMSCP.

The proposed project is an "Unmapped Land Use Project" and requires a recommendation for coverage by the Technical Advisory Committee and an approval of coverage by the Joint Powers Authority prior to any activities on the project site. As described above, the proposed project does not conflict with the SJMSCP or Biological Opinion. An approval of coverage by the Joint Powers Authority, issuance of Incidental Take Minimization Measures by the SJCOG, and implementation of Mitigation Measure 2 would insure that the proposed project would have a ***less-than-significant*** impact.

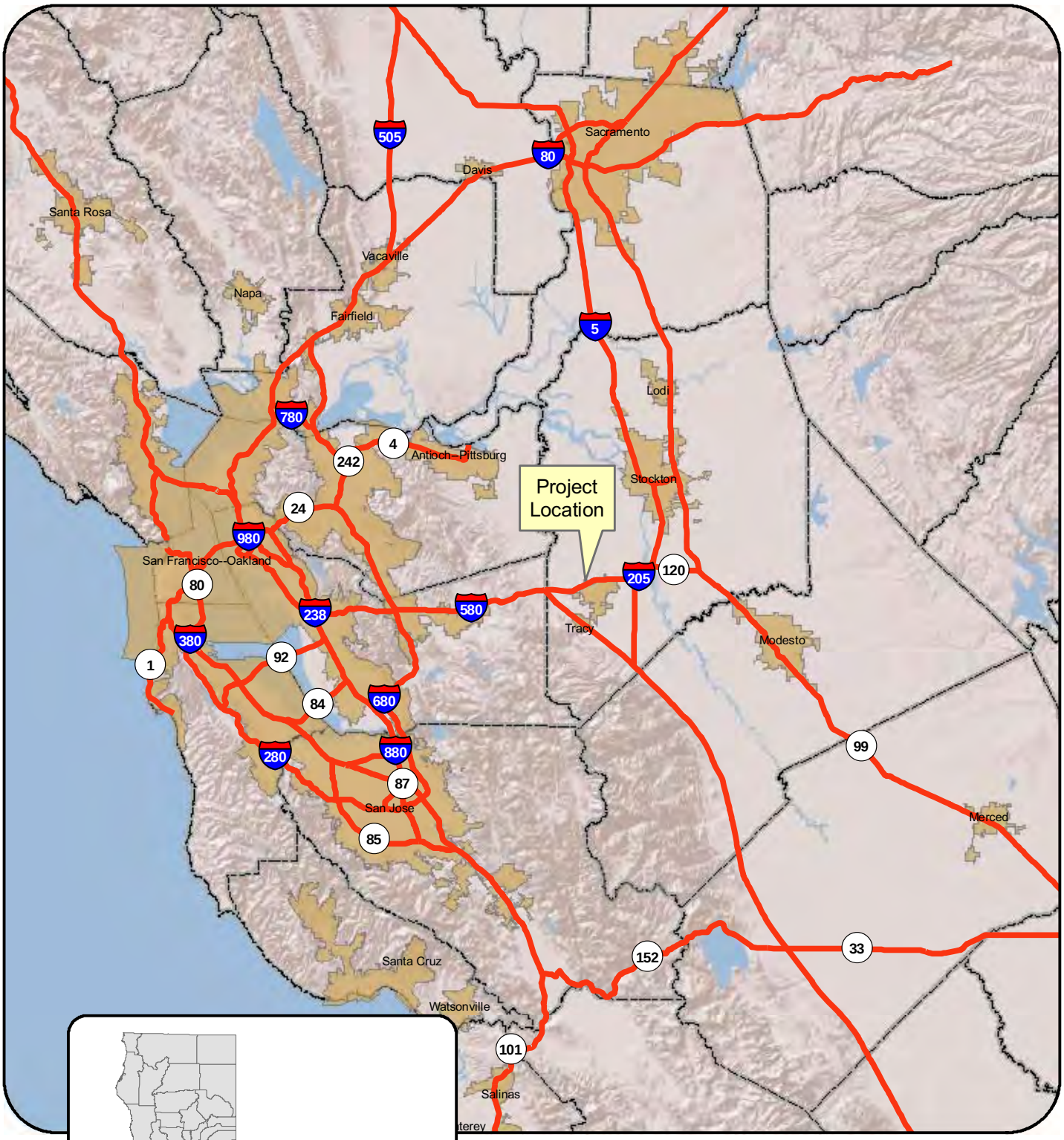

Figure 1. Project Location Map

N
W E
S

0 5 10 20 30 40 Miles

De Novo Planning Group

A Land Use Planning, Design, and Environmental Firm

November 12, 2008

This page left intentionally blank.

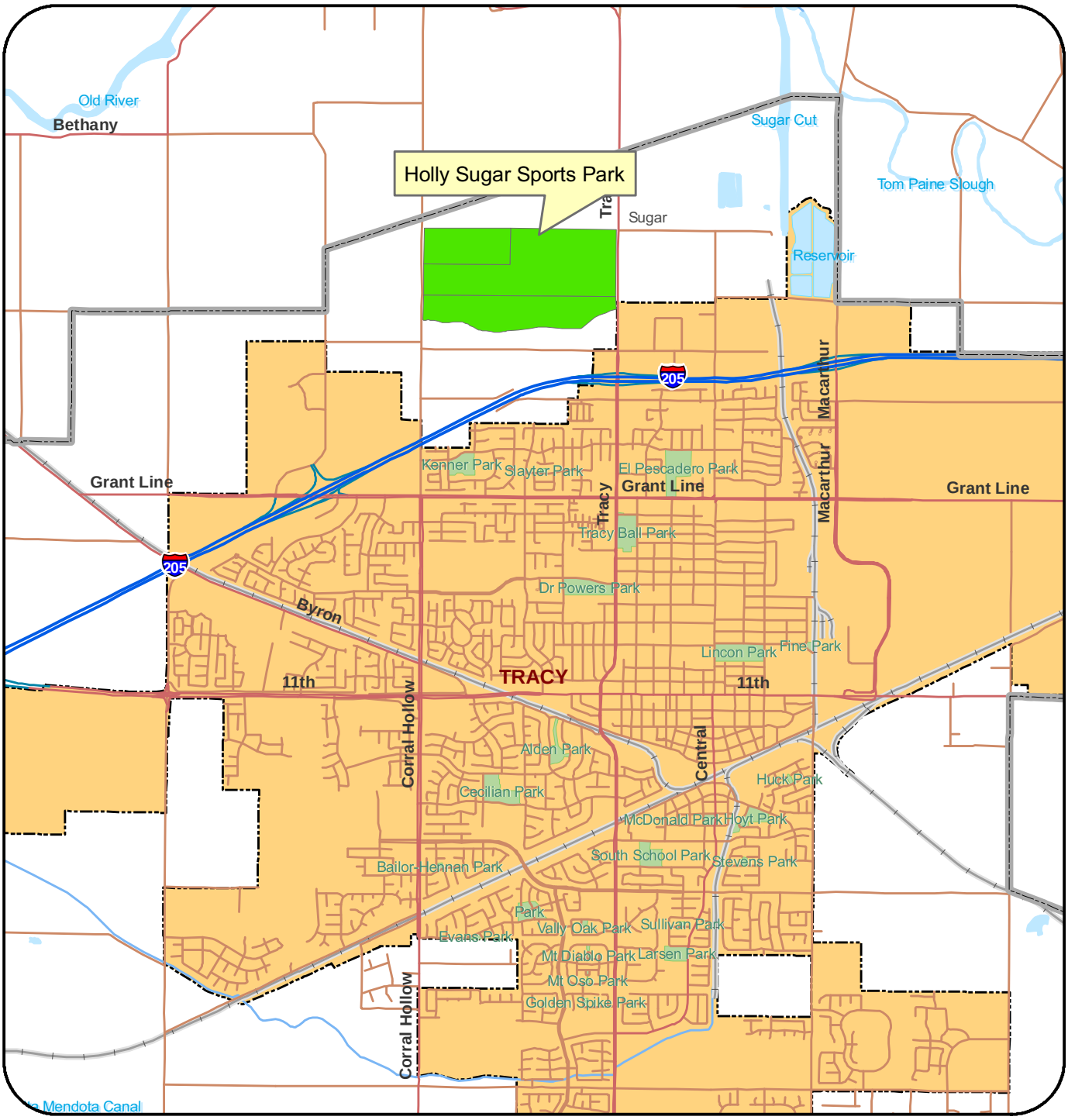

Figure 2. Project Vicinity Map

Holly Sugar Sports Park

City of Tracy

Sphere of Influence

N
W E
S

0 0.25 0.5 1 1.5 Miles

De Novo Planning Group

A Land Use Planning, Design, and Environmental Firm

December 20, 2008

This page left intentionally blank.

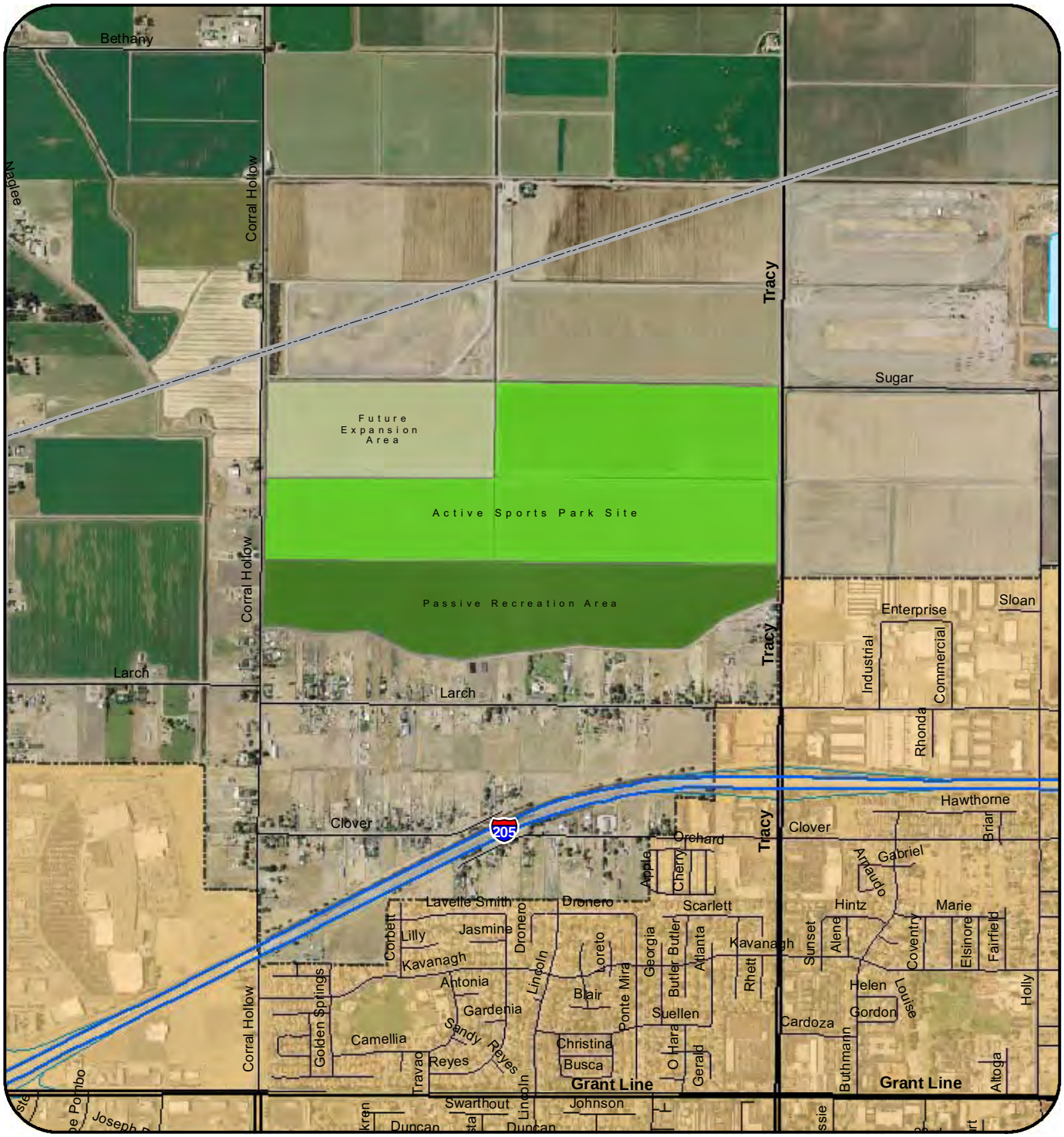

Active Sports Park Site

Passive Recreation Area

Future Expansion Area

City of Tracy

Sphere of Influence

Figure 3. Project Site Map

N
W E
S

0 250 500 1,000 1,500 2,000 Feet

De Novo Planning Group

A Land Use Planning, Design, and Environmental Firm

December 20, 2008

This page left intentionally blank.

QTY	DESC.
4	U10 SOCCER FIELDS
3	U12 SOCCER FIELDS
7	U14-U19 SOCCER FIELDS
2	396' OUTFIELD BASEBALL FIELDS
10	220' BASEBALL FIELDS

QTY	DESC.
4	220' BASEBALL FIELDS (STADIUM)
4	200' SOFTBALL FIELDS
1	200' SOFTBALL FIELD (STADIUM)
4	FOOTBALL FIELDS
1	FOOTBALL / SOCCER FIELD (STADIUM)
4	PLAY AREAS

PARCEL B
FUTURE POTENTIAL USES:
CLASS 1 BIKE PATH
ATHLETIC FIELDS
HARD COURTS
BMX
SKATE PARK
GYMNASIUM

PARCEL A
FUTURE POTENTIAL USES:
PLANTING BUFFER
ARBORETUM
CLASS 1 BIKE PATH
TRAILS
DISC GOLF

NORTH

Conceptual Design
Holly Sugar Sports Park
City Of Tracy

Date: 11/05/08
Project No.: 0805100

VERDE DESIGN

LANDSCAPE ARCHITECTURE
CIVIL ENGINEERING
SPORT PLANNING & DESIGN
2453 The Alameda, Ste. 200
Santa Clara, CA 95050
tel: 408.985.7200
fax: 408.985.7260
www.verdedesigninc.com

Figure 4. Conceptual Design

This page left intentionally blank.

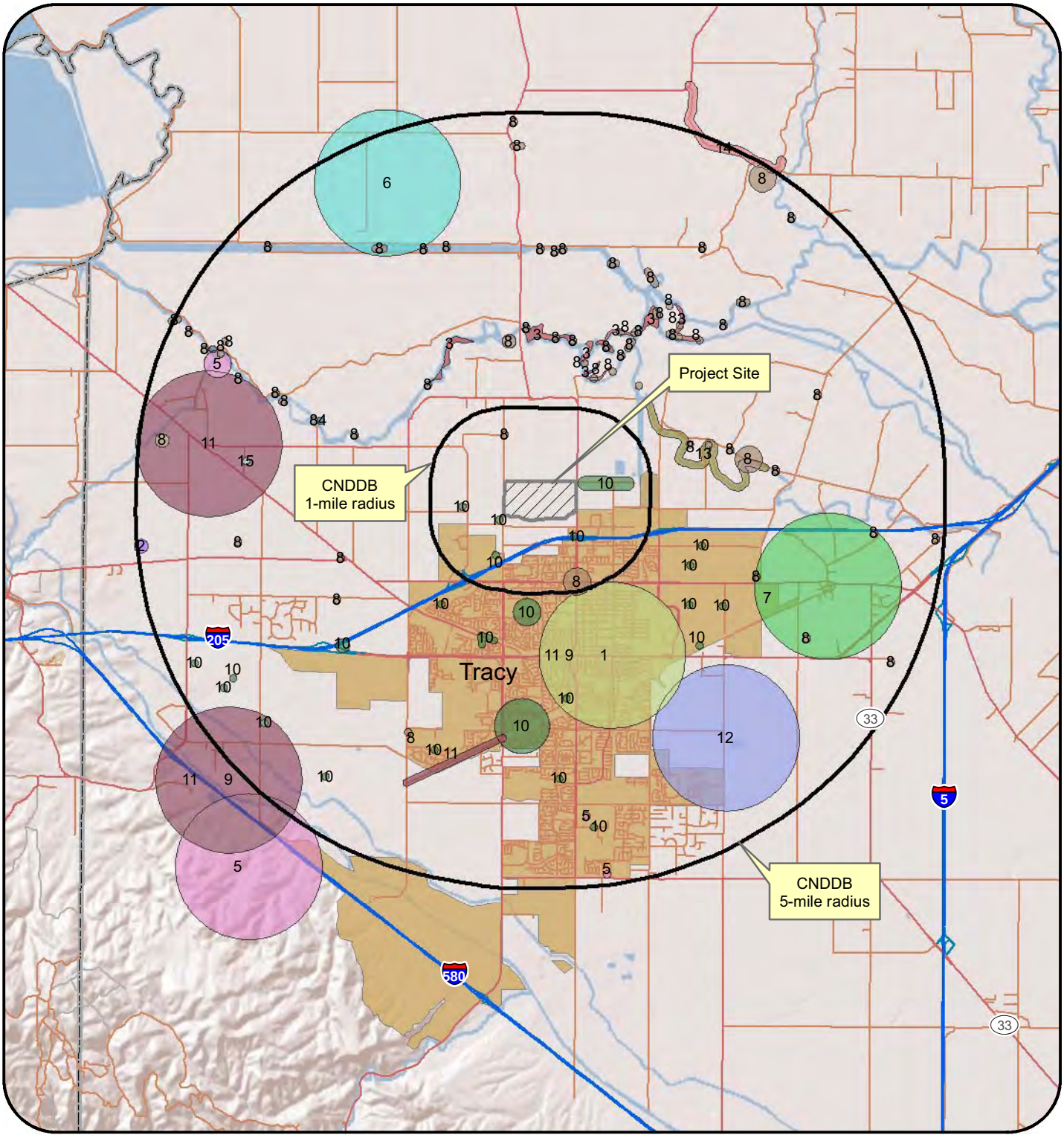

Legend

- 1, American badger
- 2, California horned lark
- 3, Great Valley Valley Oak Riparian Forest
- 4, Mason's lilaeopsis
- 5, San Joaquin kit fox
- 6, San Joaquin pocket mouse
- 7, Suisun Marsh aster
- 8, Swainson's hawk
- 9, big tarplant
- 10, burrowing owl
- 11, caper-fruited tropidocarpum
- 12, round-leaved filaree
- 13, tricolored blackbird
- 14, valley elderberry longhorn beetle
- 15, western pond turtle

Figure 5 CNDDB Special Status Species Map
(1-mile and 5-mile radius search)

N
W E
S

0 0.5 1 2 3 4 Miles

De Novo Planning Group
A Land Use Planning, Design, and Environmental Firm

Data Source: CNDDB, February 2009

February 19, 2009

This page left intentionally blank.

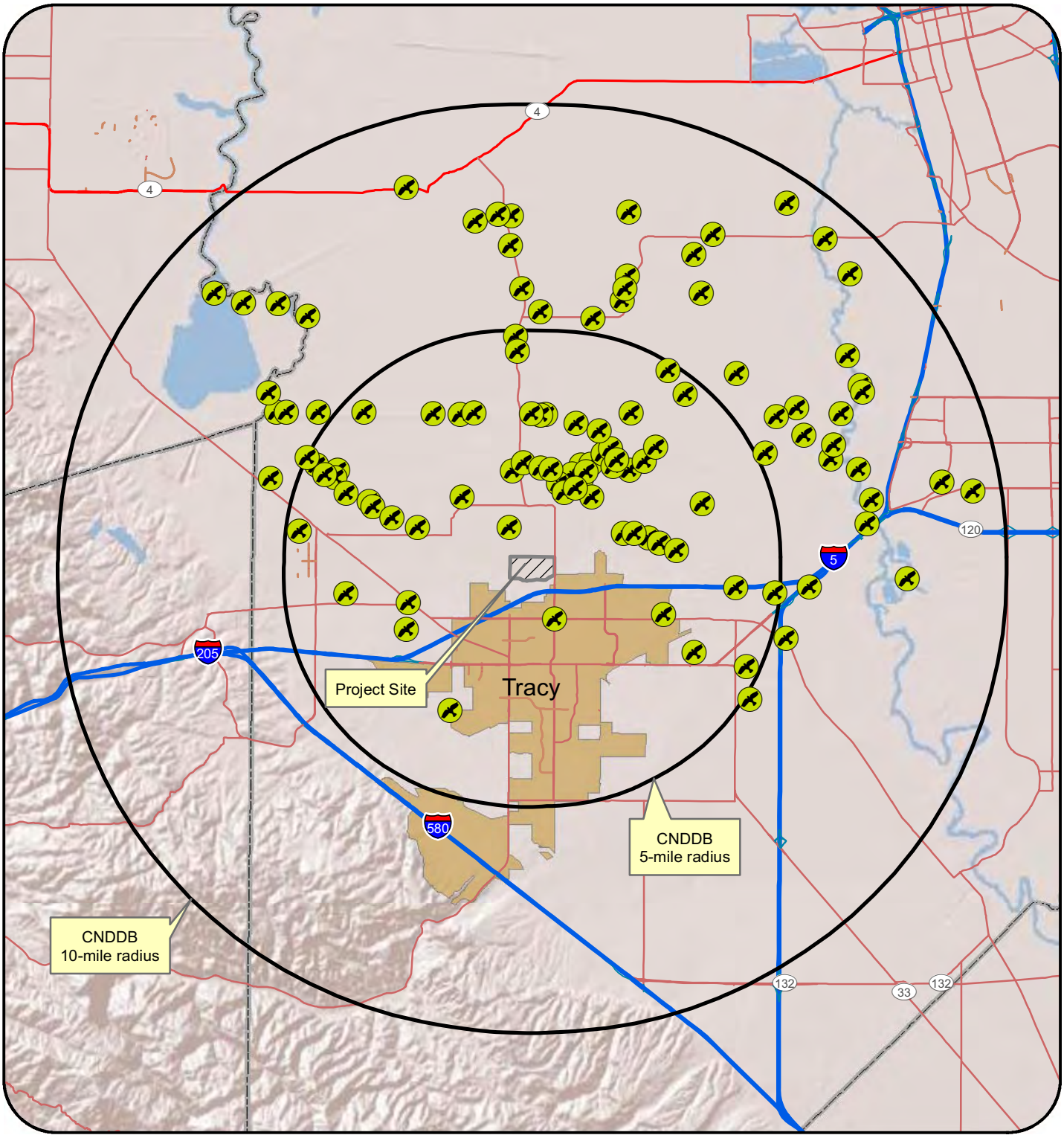

Figure 6 Swainson's Hawk Recorded Occurrences
(5-mile and 10-mile radius search)

Legend

Swainson's Hawk Occurrences

N
W E
S

0 0.5 1 2 3 4 5 6 7 Miles

Source: CNDDB, February 2009

De Novo Planning Group
A Land Use Planning, Design, and Environmental Firm

February 19, 2009

This page left intentionally blank.